Aespire 7900 Anesthesia Machine

Technical Reference Manual

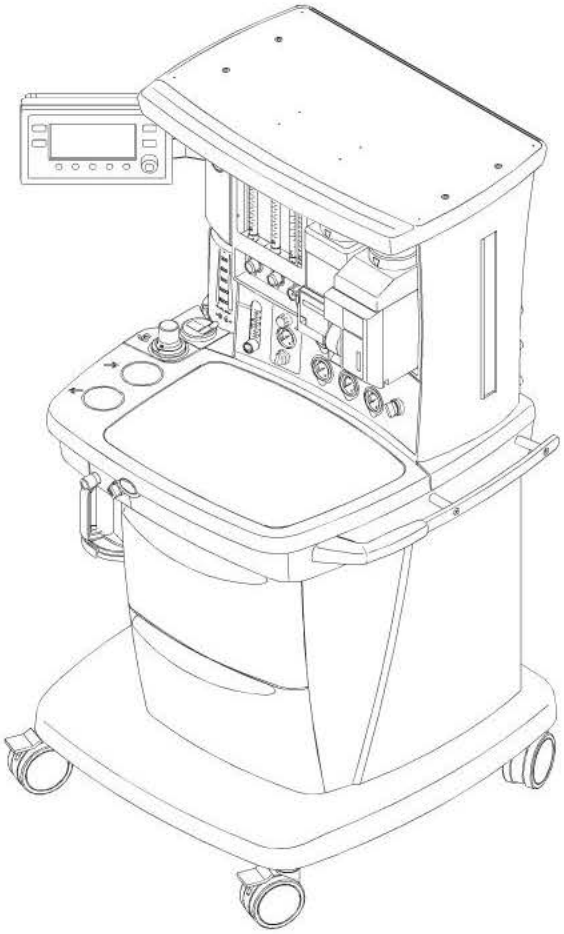

Datex-Ohmeda products have unit serial numbers with coded logic which indicates a product group code, the year of manufacture, and a sequential unit number for identification. The serial number can be in one of two formats.

AAA**X**11111	AAA**XX**111111AA
The **X** represents an alpha character indicating the year the product was manufactured; **H** = 2004, **J** = 2005, etc. **I** and **O** are not used.	The **XX** represents a number indicating the year the product was manufactured; **04** = 2004, **05** = 2005, etc.

CE 0197

Aespire, SmartVent, and Link-25 are registered trademarks of Datex-Ohmeda Inc.

Other brand names or product names used in this manual are trademarks or registered trademarks of their respective holders.

02/05 1009-0541-000

Aespire 7900 anesthesia machine

This document is not to be reproduced in any manner, nor are the contents to be disclosed to anyone, without the express authorization of the product service department, Datex-Ohmeda, Ohmeda Drive, PO Box 7550, Madison, Wisconsin, 53707.

© 2005 Datex-Ohmeda Inc.

Important

The information contained in this service manual pertains only to those models of products which are marketed by Datex-Ohmeda as of the effective date of this manual or the latest revision thereof. This service manual was prepared for exclusive use by Datex-Ohmeda service personnel in light of their training and experience as well as the availability to them of parts, proper tools and test equipment. Consequently, Datex-Ohmeda provides this service manual to its customers purely as a business convenience and for the customer's general information only without warranty of the results with respect to any application of such information. Furthermore, because of the wide variety of circumstances under which maintenance and repair activities may be performed and the unique nature of each individual's own experience, capacity, and qualifications, the fact that customer has received such information from Datex-Ohmeda does not imply in anyway that Datex-Ohmeda deems said individual to be qualified to perform any such maintenance or repair service. Moreover, it should not be assumed that every acceptable test and safety procedure or method, precaution, tool, equipment or device is referred to within, or that abnormal or unusual circumstances, may not warrant or suggest different or additional procedures or requirements.

This manual is subject to periodic review, update and revision. Customers are cautioned to obtain and consult the latest revision before undertaking any service of the equipment. Comments and suggestions on this manual are invited from our customers. Send your comments and suggestions to the Manager of Technical Communications, Datex-Ohmeda, Ohmeda Drive, PO Box 7550, Madison, Wisconsin 53707.

⚠ CAUTION Servicing of this product in accordance with this service manual should never be undertaken in the absence of proper tools, test equipment and the most recent revision to this service manual which is clearly and thoroughly understood.

Technical Competence

The procedures described in this service manual should be performed by trained and authorized personnel only. Maintenance should only be undertaken by competent individuals who have a general knowledge of and experience with devices of this nature. No repairs should ever be undertaken or attempted by anyone not having such qualifications.

Datex-Ohmeda strongly recommends using only genuine replacement parts, manufactured or sold by Datex-Ohmeda for all repair parts replacements.

Read completely through each step in every procedure before starting the procedure; any exceptions may result in a failure to properly and safely complete the attempted procedure.

Table of Contents

Important ii
Technical Competence ii

1 Introduction

1.1 What this manual includes 1-2
1.2 Standard service procedures 1-2
1.2.1 User's Reference Manuals 1-2
1.2.2 Software versions 1-2
1.2.3 Ventilator tests 1-2
1.3 What is an Aespire 7900 1-3
1.4 Configuration options 1-3
1.4.1 Standard configuration 1-3
1.4.2 Options 1-3
1.5 System components 1-4
1.6 Symbols used in the manual or on the equipment 1-7

2 Theory of Operation

2.1 Theory overview 2-2
2.2 Gas flow through the anesthesia machine 2-2
2.2.1 Overview 2-2
2.2.2 Physical connections 2-6
2.2.3 Suction regulators 2-7
2.2.4 System switch 2-8
2.2.5 Flow control 2-9

2.3 Flow through the breathing system 2-11
2.3.1 Overview of flow paths 2-11
2.3.2 Manual ventilation. 2-12
2.3.3 Mechanical ventilation 2-15
2.3.4 Fresh gas and O_2 flush flow 2-18
2.4 Aespire 7900 Ventilator 2-20
2.4.1 Features 2-20
2.4.2 Safety features 2-20
2.5 Aespire 7900 Ventilator components 2-21
2.5.1 Ventilator control electronics 2-22
2.5.2 Control panel and display 2-23
2.5.3 Enhanced Sensor Interface Board (ESIB) 2-24
2.5.4 Pneumatic Vent Engine 2-24
2.6 Electrical 2-25
2.6.1 Block diagram 2-25
2.6.2 Power supply 2-26
2.6.3 Sealed lead acid battery 2-27
2.6.4 CPU assembly 2-28
2.6.5 Enhanced Sensor Interface Board (ESIB) 2-35
2.7 Ventilator mechanical subsystems 2-39
2.7.1 Drive gas filter and Gas Inlet Valve 2-39
2.7.2 Pressure regulator 2-40
2.7.3 Flow control valve 2-40
2.7.4 Drive Gas Check Valve (DGCV) 2-41
2.7.5 Bellows Pressure Relief Valve 2-41
2.7.6 Exhalation valve 2-42
2.7.7 Mechanical Overpressure Valve 2-43
2.7.8 Reservoir and bleed resistor 2-43
2.7.9 Free breathing valve 2-44
2.7.10 Breathing circuit flow sensors 2-44

3 Checkout Procedure

3.1 Ventilator post-service checkout 3-2
3.2 Inspect the system 3-2
3.3 Pipeline and cylinder tests 3-3
3.4 Flow control tests 3-4
3.5 Pressure relief test 3-6
3.6 O_2 supply alarm test 3-6
3.7 Flush flow test 3-7
3.8 Vaporizer back pressure test 3-8

3.9 Low-pressure leak test 3-9
3.9.1 Negative low-pressure leak test 3-9
3.9.2 ISO or BSI standard low-pressure leak test 3-10
3.10 Alarm tests 3-12
3.11 Breathing system tests 3-14
3.12 Auxiliary O2 flowmeter tests 3-16
3.13 Integrated Suction Regulator tests 3-16
3.14 Power failure test 3-17
3.15 Electrical safety tests 3-17

4 Self Tests and Service Mode

4.1 Self tests 4-3
4.2 Service Mode Confirmation menu 4-4
4.3 Main Menu - Service Mode 4-5
4.3.1 Alarm Log 4-6
4.3.2 Error Log 4-7
4.3.3 System Configuration 4-8
4.3.4 User Select Defaults 4-12
4.3.5 Test CPU and Memory 4-14
4.3.6 Test EEPROM 4-15
4.3.7 Test GIV 4-16
4.3.8 Test Flow Valve 4-17
4.3.9 Test Drive Pressure Limit Switch 4-18
4.3.10 Test 5V Fail Alarm 4-19
4.3.11 Test Serial Ports 4-20
4.3.12 Breathing System Leak Test 4-21
4.3.13 Display A/D Channels 4-22
4.3.14 Display Discrete I/O Signals 4-24
4.3.15 Display Battery Status 4-25
4.3.16 Test Panel Switches 4-26
4.3.17 Flow Valve Test Tool 4-27
4.3.18 Adjust Drive Gas Regulator 4-28
4.3.19 O2 Calibrations 4-29
4.3.20 Calibrate Flow Sensors 4-30
4.3.21 Pressure Sensitivity 4-31
4.3.22 Calibrate Flow Valve 4-32
4.3.23 Bleed Resistor Calibration 4-33
4.3.24 Service Calibrations Required 4-34

5 Calibration

5.1 Primary Regulators 5-2
5.1.1 Test setup 5-2
5.1.2 Testing Primary Regulators 5-2
5.1.3 Adjusting Primary Regulators 5-6
5.2 Secondary Regulators 5-7
5.2.1 Testing/Adjusting Secondary Regulators or Balance Regulators 5-7
5.3 Flowmeter Needle Valve Calibration 5-8
5.3.1 O_2 Needle Valve Calibration (Minimum Flow) 5-8
5.3.2 N_2O Needle Valve Calibration (Minimum Flow) 5-10
5.3.3 Air Needle Valve Calibration (Minimum Flow) 5-14
5.4 Link system calibration 5-17
5.5 Airway pressure gauge 5-22
5.5.1 Zero the pressure gauge 5-22
5.5.2 Checking the pressure gauge accuracy 5-23

6 Installation and Maintenance

6.1 Aespire 7900 Installation Checklist 6-2
6.2 Aespire 7900 Planned Maintenance 6-4
6.2.1 Every twelve (12) months 6-4
6.2.2 Every twenty-four (24) months 6-5
6.3 Free breathing valve maintenance 6-6
6.4 MOPV pressure relief valve test 6-7
6.4.1 Test setup 6-7
6.4.2 Test procedure 6-7
6.5 Auxiliary O2 flowmeter tests 6-8
6.6 Integrated Suction Regulator tests 6-9

7 Troubleshooting

7.1 General Troubleshooting 7-2
7.2 Breathing System Leak Test Guide 7-4
7.2.1 Breathing system leak test 7-5
7.2.2 Breathing System Troubleshooting Flowcharts 7-7
7.2.3 Leak Isolation Tests 7-12
7.3 Ventilator Troubleshooting instructions 7-27
7.4 System Error Log 7-28
7.5 Alarm messages 7-29
7.6 Mechanical/electrical troubleshooting guide 7-42

7.7 Troubleshooting Flowcharts 7-44
7.7.1 Ventilator assessment process 7-44
7.7.2 No display troubleshooting. 7-45
7.7.3 Inaccurate volume ventilation troubleshooting. 7-46
7.7.4 No ventilation troubleshooting. 7-47
7.7.5 High intrinsic PEEP troubleshooting. 7-48
7.8 Power supply test points 7-49

8 Software Installation

9 Repair Procedures

9.1 How to bleed gas pressure from the machine 9-3
9.2 How to remove the rear panels 9-4
9.2.1 To remove the rear upper panel 9-4
9.2.2 To remove the lower access panels 9-4
9.3 How to remove the tabletop 9-5
9.4 Replace pipeline inlet filter 9-6
9.4.1 Replace pipeline inlet check valve 9-6
9.5 Change drive gas 9-7
9.6 Service the cylinder supply modules 9-8
9.6.1 Tightening procedure for high-pressure tube fittings 9-8
9.6.2 Replace primary regulator module (complete replacement) 9-8
9.6.3 Replace cylinder inlet filter 9-9
9.6.4 Replace cylinder check valve 9-9
9.7 Replace system switch assembly 9-10
9.8 Service the flowmeter module 9-12
9.8.1 Remove front flowmeter panel shield 9-12
9.8.2 Remove flowtubes for cleaning or replacement 9-12
9.8.3 Remove complete flowmeter head 9-14
9.8.4 Replace flowmeter modules 9-15
9.8.5 Replace flowmeter frame 9-19
9.8.6 Replace O_2 supply switch 9-20
9.8.7 Checkout procedure for O_2 supply switch 9-20
9.8.8 Replace secondary regulator manifold or balance regulator manifold 9-21
9.8.9 Replace O_2 or N_2O needle valves (on machines with N_2O) 9-22
9.8.10 Replace an Air needle valve on all machines or an O_2 needle valve on machines without N_2O 9-24

9.9 Service vaporizer manifold parts 9-25
9.9.1 Repair manifold port valve 9-25
9.9.2 Checkout procedure for manifold port valve 9-26
9.9.3 Replace vaporizer manifold check valve 9-27
9.9.4 Replace vaporizer pressure relief valve 9-29
9.9.5 Replace vaporizer manifold 9-30
9.10 Replace ACGO selector switch 9-31
9.11 Clean or replace ACGO port flapper valve 9-33
9.12 Reconfigure sample gas return line 9-34
9.13 Replace the APL valve 9-35
9.14 Replace the bag support arm 9-36
9.14.1 Servicing the bag support arm 9-37
9.14.2 Replace friction pad in lower bag arm assembly 9-38
9.14.3 Replace bag port housing 9-39
9.15 Replace auxiliary O_2 flowmeter 9-40
9.16 Replace the suction control module 9-41
9.16.1 Front panel method 9-41
9.16.2 Rear panel method 9-42
9.17 Replace ABS breathing system components 9-43
9.17.1 Replace Bag/Vent switch assembly 9-43
9.17.2 Replace bellows base latch assembly 9-44
9.18 Replace casters 9-45
9.19 Replace task light and switch 9-46
9.19.1 To replace the task-light switch 9-46
9.19.2 To replace the task-light circuit board 9-46
9.20 Replace the display cable (long arm) 9-47
9.20.1 Removing the display arm 9-47
9.20.2 Replacing a display cable 9-47
9.20.3 Installing the long arm 9-48
9.21 Replace the display cable (folding mount) 9-49
9.21.1 Removing the folding mount 9-49
9.21.2 Replacing a display cable 9-49
9.21.3 Installing the folding mount 9-50
9.22 Aespire 7900 Control/Display module 9-51
9.23 Electrical enclosure components 9-54
9.23.4 Battery 9-58
9.23.5 Replace CPU cables 9-59
9.24 Servicing the Vent Engine 9-60
9.24.1 To remove the Vent Engine 9-61
9.24.2 Replacing Vent Engine components 9-62
9.24.3 Replacing GIV components 9-63

10 Illustrated Parts

10.1 Service tools 10-3
10.1.1 Software 10-3
10.1.2 Secondary regulator pilot pressure tool 10-3
10.1.3 Test Devices 10-4
10.1.4 Lubricants and Adhesives 10-4
10.1.5 Test Tools 10-5
10.2 External components - front view 10-6
10.3 External components - front view references 10-7
10.4 External Components - rear view 10-8
10.5 Front panel, gauges and system switch 10-9
10.6 Rear panel components 10-10
10.7 Tabletop components 10-11
10.8 Right-side Components 10-12
10.9 External components - lower assembly 10-13
10.10 Drawer 10-14
10.11 AC Power cords 10-15
10.12 AC Inlet/Outlet Components 10-16
10.13 Pipeline inlet fittings 10-18
10.14 Cylinder Gas Supplies 10-19
10.14.1 Cylinder inlet fittings 10-20
10.15 Vaporizer manifold 10-21
10.16 Flowmeter components 10-22
10.16.1 Flowtube parts 10-24
10.16.2 Secondary regulator components 10-26
10.17 ABS to machine Interface Components 10-28
10.17.1 Flush Valve and ACGO Selector Switch 10-29
10.18 Breathing system interface 10-30
10.19 Breathing System 10-31
10.19.1 APL Valve 10-31
10.19.2 Bag/Vent Switch 10-32
10.19.3 Absorber canister 10-33
10.19.4 Flow Sensor Module 10-34
10.19.5 Breathing Circuit Module 10-35
10.19.6 Exhalation valve 10-36
10.19.7 Bellows 10-37
10.19.8 Bellow base 10-38
10.19.9 Bag Arms 10-39

10.20 Electrical enclosure (lower) parts 10-40
10.21 Display Module 10-42
10.21.1 Rear housing parts 10-42
10.21.2 Front housing parts. 10-43
10.22 Vent Engine Housing 10-44
10.23 Vent Engine 10-45
10.23.1 Vent Engine - under side 10-46
10.24 Legris quick-release fittings 10-47
10.25 Vent Drive and low-pressure tubing 10-48
10.26 Tubing for use with Legris fittings 10-50
10.27 Cables and harnesses 10-52
10.28 Anesthetic Gas Scavenging System — AGSS 10-54
10.28.1 Passive AGSS 10-54
10.28.2 Adjustable AGSS 10-56
10.28.3 Active AGSS 10-58
10.29 Integrated Suction Regulator 10-60
10.29.1 Major Components (Continuous and Venturi suction). 10-60
10.29.2 Suction Control Module 10-61
10.29.3 Venturi assembly 10-62
10.30 Auxiliary O_2 Flowmeter 10-63
10.31 Serial and task light cable, AGSS flowtube, and sample return 10-64
10.32 Display mounts 10-65
10.32.1 Long arm 10-65
10.32.2 Folding mount. 10-66
10.33 Cable management arm 10-67
10.34 Display arm mounting kits for optional equipment 10-68

11 Schematics and Diagrams

1 Introduction

In this section

This section provides a general overview of the Aespire 7900 anesthesia machine.

1.1 What this manual includes 1-2

1.2 Standard service procedures 1-2

1.2.1 User's Reference Manuals 1-2

1.2.2 Software versions 1-2

1.2.3 Ventilator tests 1-2

1.3 What is an Aespire 7900 1-3

1.4 Configuration options 1-3

1.4.1 Standard configuration 1-3

1.4.2 Options 1-3

1.5 System components 1-4

1.6 Symbols used in the manual or on the equipment 1-7

1.1 What this manual includes

This manual covers the service information for the Aespire anesthesia machine with 7900 Ventilator. It covers the following components:

- Aespire 7900 Ventilator components
- Gas delivery components
- Breathing system components
- Frame component
- Optional suction regulator
- Optional auxiliary O_2 flowmeter

Other equipment

Other equipment may be attached to the system on the display mount, the top shelf, or on the side dovetail rails. Consult separate documentation relative to these items for details.

1.2 Standard service procedures

1.2.1 User's Reference Manuals

Some sections of this manual refer you to the User's Reference manual for the Aespire 7900 anesthesia machine. To expedite repairs, you must have, and be familiar with, the User's Reference manual (Part 1 and Part 2) for this product.

Refer to the Aespire User's Reference manual if you need further information about the operation of the system.

1.2.2 Software versions

The revision level is displayed on the ventilator start-up menu. This manual includes test and calibration procedures for Revision 4.X software.

1.2.3 Ventilator tests

Service calibration functions let Datex-Ohmeda trained users and Datex-Ohmeda service personnel perform ventilator setup functions, tests, calibration and measurements from the front panel display.

Normal operational tests, calibration, and troubleshooting can be performed on your Aestiva 7900 Ventilator without removing components from the system. Repair may require removing the ventilator components from the anesthesia machine.

⚠ WARNING Section 4, *"Service Mode Tests and Calibration"* must be performed whenever you access any internal component of the Ventilator to verify that all critical parts of the Ventilator are still operational and within specification.

⚠ WARNING After the Ventilator has been serviced, you must perform *"Post -Service Checkout"* to verify the entire Anesthesia System is properly functioning before the system can be returned to clinical use.

1.3 What is an Aespire 7900

The Aespire 7900 is a compact, integrated and intuitive anesthesia delivery system. The ventilator portion provides mechanical ventilation to a patient during surgery as well as monitoring and displaying various patient parameters.

The system uses a microprocessor-controlled ventilator with internal monitors, electronic PEEP, Volume Mode, and other optional features. A serial interface permits communication to cardiovascular and respiratory gas monitoring.

Note Configurations available for this product depend on local market and standards requirements. Illustrations in this manual may not represent all configurations of the product.

The Aespire 7900 is not suitable for use in an MRI environment.

1.4 Configuration options

1.4.1 Standard configuration

The standard configuration includes the following items.

- 7900 Ventilator
- Advanced Breathing System (ABS)
- Vaporizer manifold (2 Vap)
- Auxiliary Common Gas Outlet (ACGO)
- Serial Interface - RS232
- Bi-level LED light strip
- Two large drawers

1.4.2 Options

Options include the following items.

- Selected software features
- Pipeline configurations (O_2/N_2O, O_2/Air, or O_2/N_2O/Air)
- Gas cylinder configurations (two inboard)
  - inboard configuration = O_2/N_2O, O_2/Air, or O_2/O_2
- Manual bag (on support arm or on tube)
- Gas scavenging (active, adjustable, passive, or venturi)
- A suction regulator (pipeline vacuum or venturi vacuum)
- An auxiliary O_2 flowmeter
- Localized electrical power outlets (isolated or non-isolated)
- Two Control Module (Ventilator Display) mounting solutions
  - (long arm or folding mount)
- Various monitoring display mounting solutions

1.5 System components

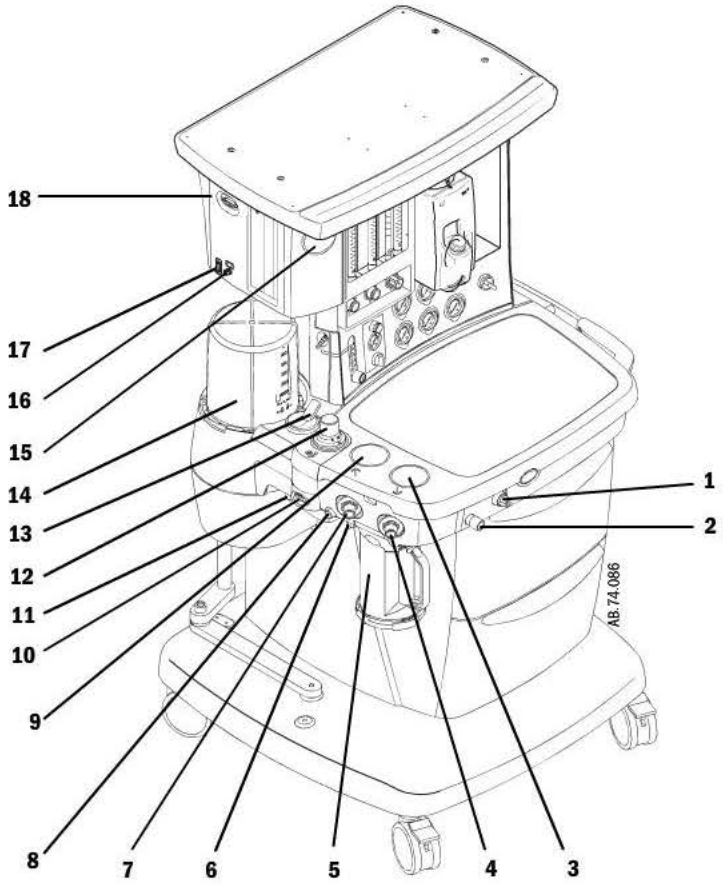

1. **Auxiliary common gas outlet (ACGO) switch**
2. **ACGO**
3. **Inspiratory check valve**
4. **Inspiratory flow sensor**
5. **Canister (carbon dioxide absorbent)**
6. **Canister release**
7. **Expiratory flow sensor or flow port adapter**
8. **Leak test plug**
9. **Expiratory check valve**
10. **Breathing system release**
11. **Manual bag port**
12. **APL (adjustable pressure-limiting) valve**
13. **Bag/Vent switch**
14. **Bellows assembly**
15. **Pressure gauge (airway)**
16. **Sample gas return port**
17. **Scavenging flow indicator**
18. **RS-232 Serial port**

Figure 1-1 ▪ Aespire 7900 anesthesia machine (front view - left side)

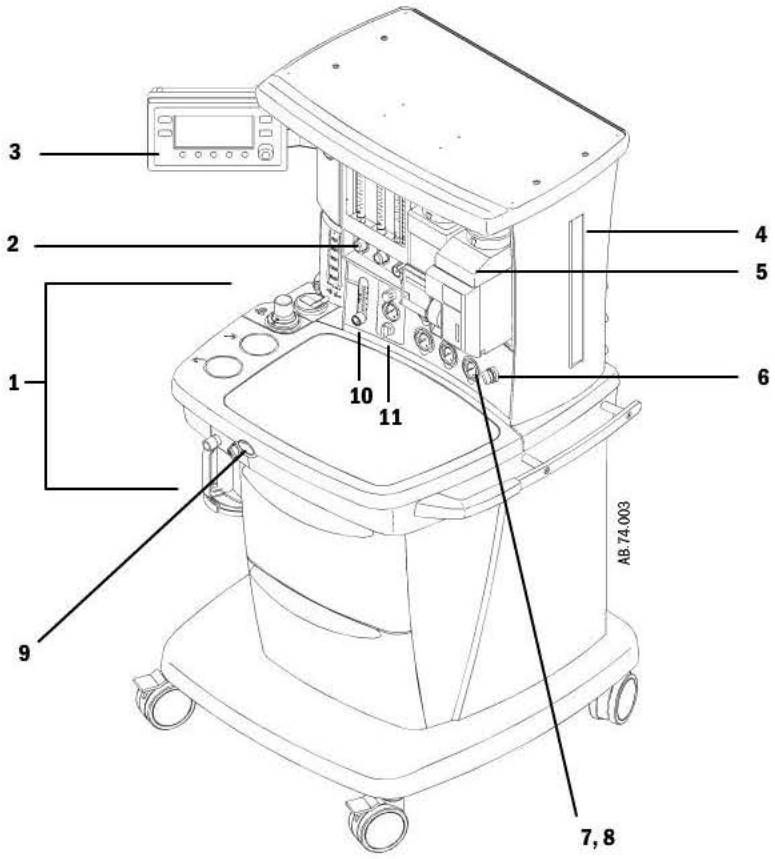

1. **ABS (Advanced Breathing System)**
2. **Flow controls**
3. **Control Module (Ventilator Display)**
4. **Dovetail rails**
5. **Vaporizer**
6. **System switch**
7. **Pipeline pressure gauge(s) (upper row)**
8. **Cylinder pressure gauge(s) (lower row)**
9. **O_2 Flush**
10. **Auxiliary O_2 flowmeter**
11. **Suction regulator**

Figure 1-2 ▪ Aespire 7900 anesthesia machine (front view - right side)

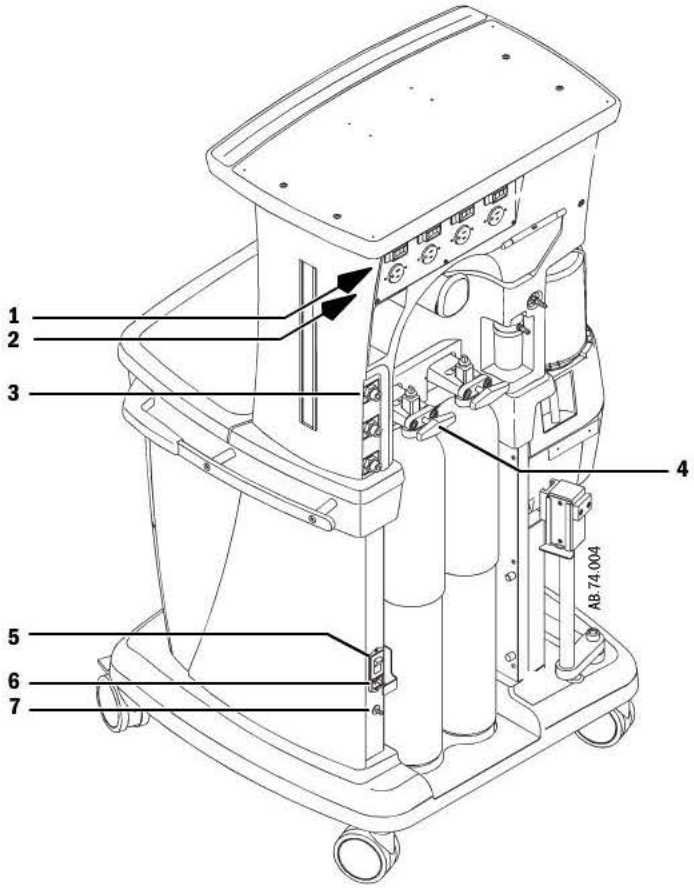

1. **Circuit Breaker for Electrical Outlets**
2. **Electrical Outlets**
3. **Pipeline Connection(s)**
4. **Cylinder Supplies**
5. **System Circuit Breaker**
6. **Mains Inlet**
7. **Equipotential Stud**

Figure 1-3 ▪ Aespire 7900 anesthesia machine (rear view)

1.6 Symbols use[illegible] ne n[illegible] l o[illegible] on t[illegible] equi[illegible] t

⚠ Warnings and ⚠ Cautions tell yo[illegible] bout dangerous conditions that can occur if you do not follow all instruction[illegible] this manual.

Warnings tell about a condition that ca[illegible] ause injury to the operator or the patient.

Cautions tell about a condition that can [illegible] se damage to the equipment. Read and follow all warnings and cautions.

Other symbols replace words on the eq[illegible] ment or in Datex-Ohmeda manuals. No one device or manual uses all of the [illegible] mbols. These symbols include:

I	On (power)		Alarm silence button
O	Off (power)		Alarm silence touch key (Tec 6).
⏻	Standby		Type B equipment
	Standby or preparatory state for part of the equipment		Type BF equipment
	"ON" only for part of the equipment		Type CF equipment
	"OFF" only for part of the equipment		Caution, ISO 7000-0434
⎓	Direct current		Attention, refer to product instructions, IEC 601-1
∼	Alternating current		Dangerous voltage
	Protective earth ground		Electrical input
	Earth ground		Electrical output
	Frame or chassis ground		Pneumatic input
	Equipotential		Pneumatic output

+	Plus, positive polarity
-	Minus, negative polarity
	Variability
	Variability in steps
	This way up
	Lamp, lighting, illumination
	Lock
	Unlock
	Close drain
	Open drain (remove liquid)
134°C	Autoclavable
134°C	Not autoclavable
Insp	Inspiratory flow
O_2%	O_2 sensor connection
REF	Stock Number
	Movement in one direction
	Movement in two directions
	Read top of float
	Vacuum inlet
	Suction bottle outlet
	Cylinder
	Isolation transformer
	Linkage system
	Risk of Explosion.
	Low pressure leak test
	Mechanical ventilation
APL	Bag position/ manual ventilation
Exp	Expiratory flow
O_2+	O_2 Flush button
SN	Serial Number

Alarm silence touch key

Volume alarms On/Off touch key

End case touch key

Menu touch key

Circle breathing circuit module

Bain/Mapleson D breathing circuit module

< 345 kPa

The primary regulator is set to pressure less than 345 kPa (50 psi)

< 414 kPa

The primary regulator is set to pressure less than 414 kPa (60 psi)

Absorber on

CO_2

CO_2 Bypass Option

Absorber off (CO_2 Bypass active)

CE xxxx

Systems with this mark agree with the European Council Directive (93/42/EEC) for Medical Devices when they are used as specified in their Operation and Maintenance Manuals. The xxxx is the certification number of the Notified Body used by Datex-Ohmeda's Quality Systems.

EC REP

Authorized representative in the European Community

Manufacturer

℞ ONLY

Caution: federal law prohibits dispensing without prescription.

2 Theory of Operation

In this section

2.1 Theory overview 2-2

2.2 Gas flow through the anesthesia machine 2-2

2.2.1 Overview 2-2

2.2.2 Physical connections 2-6

2.2.3 Suction regulators 2-7

2.2.4 System switch 2-8

2.2.5 Flow control 2-9

2.3 Flow through the breathing system 2-11

2.3.1 Overview of flow paths 2-11

2.3.2 Manual ventilation. 2-12

2.3.3 Mechanical ventilation 2-15

2.3.4 Fresh gas and O_2 flush flow 2-18

2.4 Aespire 7900 Ventilator 2-20

2.4.1 Features 2-20

2.4.2 Safety features 2-20

2.5 Aespire 7900 Ventilator components 2-21

2.5.1 Ventilator control electronics 2-22

2.5.2 Control panel and display 2-23

2.5.3 Enhanced Sensor Interface Board (ESIB) 2-24

2.5.4 Pneumatic Vent Engine 2-24

2.6 Electrical 2-25

2.6.1 Block diagram 2-25

2.6.2 Power supply 2-26

2.6.3 Sealed lead acid battery 2-27

2.6.4 CPU assembly 2-28

2.6.5 Enhanced Sensor Interface Board (ESIB) 2-35

2.7 Ventilator mechanical subsystems 2-39

2.7.1 Drive gas filter and Gas Inlet Valve 2-39

2.7.2 Pressure regulator 2-40

2.7.3 Flow control valve 2-40

2.7.4 Drive Gas Check Valve (DGCV) 2-41

2.7.5 Bellows Pressure Relief Valve 2-41

2.7.6 Exhalation valve 2-42

2.7.7 Mechanical Overpressure Valve 2-43

2.7.8 Reservoir and bleed resistor 2-43

2.7.9 Free breathing valve 2-44

2.7.10 Breathing circuit flow sensors 2-44

2.1 Theory overview

This section describes:

- The flow of gas through the anesthesia machine.
- The flow of gas through the breathing system.
- Electrical signals between the anesthesia machine, including the breathing system, and the ventilator.

2.2 Gas flow through the anesthesia machine

2.2.1 Overview

Refer to Figure 2-1.

Gas supplies

Gas comes into the system through a pipeline (**2**) or cylinder (**4**) connection. All connections have indexed fittings, filters, and check valves (one-way valves). Gauges show the pipeline (**1**) and cylinder (**3**) pressures.

A primary regulator (**5**) decreases the cylinder pressures to approximately pipeline levels. A pressure relief valve (**6**) helps protect the system from high pressures.

To help prevent problems with the gas supplies:

- Install yoke plugs on all empty cylinder connections.
- When a pipeline supply is adequate, keep the cylinder valve closed.

O_2 flow

Pipeline or regulated cylinder pressure supplies O_2 directly to the ventilator (**7a** for O_2 drive gas), the venturi suction (**21a** for O_2 drive gas) supply connection, the flush valve (**14a**), and the auxiliary flowmeter (**25**).

The flush valve supplies high flows of O_2 to the fresh gas outlet (**26** or **27**) when you push the flush button. The flush pressure switch (**14b**) monitors activation of the flush valve.

When the system switch (**8**) is On, O_2 flows to the rest of the system.

A secondary regulator (**10**) supplies a constant O_2 pressure to the O_2 flow control valve (**11**). There is a minimum flow of 25 to 75 mL/min (for dual-tube flowmeters) or 175 to 225 mL/min (for single-tube flowmeters) through the O_2 flowmeter (**12**).

The O_2 pressure switch (**9**) monitors the O_2 supply pressure. If the pressure is too low, an alarm appears on the ventilator display.

Air and N_2O flow

Pipeline or regulated cylinder pressure supplies Air directly to the ventilator (**7b** for Air drive gas) and the venturi suction (**21b** for Air drive gas) supply connection.

When the system switch (**8**) is On, air flows to the Air flow control valve (**19**). Because there is no balance regulator, air flow continues at the set rate during an O_2 supply failure.

A balance regulator (**15**) controls the N_2O supply pressure to the N_2O flow control valve(**16**). The O_2 secondary regulator pressure at a pilot port controls the output of the balance regulator. The N_2O output pressure drops with decreasing O_2 supply pressure and shuts off hypoxic gas flow before the O_2 supply pressure reaches zero.

A chain link system (Link-25) on the N_2O and O_2 flow controls (**16, 11**) helps keep the O_2 concentration higher than 21% (approximate value) at the common gas outlet.

Mixed gas

The mixed gas goes from the flowmeter outlet, through the vaporizer manifold and vaporizer (**23**) that is On, to the ACGO selector switch (**E**). A pressure relief valve (**24**) sets the maximum outlet pressure.

The ACGO selector switch directs the mixed gas to the selected circuit – to the breathing system (**26**) or to the ACGO (**27**).

Key to Numbered Components

1. Pipeline pressure gauge
2. Pipeline inlet
3. Cylinder pressure gauge
4. Cylinder inlet (maximum of 3 cylinders)
5. Primary regulator (cylinder pressure)
6. High-pressure relief valve (758 kPa / 110 psi)*
7. Supply connections for the ventilator
   a. O_2 drive gas
   b. Air drive gas
8. System switch
9. Switch for low O_2 supply pressure alarm (used with the ventilator)
10. O_2 secondary regulator (207 kPa / 30 psi)*
11. O_2 flow control valve
12. O_2 flow tube(s)
14. O_2 Flush
    a. Flush valve
    b. Pressure switch (used with the ventilator)
15. N_2O balance regulator
16. N_2O flow control valve
17. N_2O flow tube(s)
19. Air flow control valve
20. Air flow tube(s)
21. Supply connection for Venturi suction
    c. O_2 drive gas
    d. Air drive gas
22. Vaporizer port valve
23. Vaporizer
24. Low-pressure relief valve (38 kPa / 5.5 psi)*
25. Auxiliary flowmeter (optional)
26. To ABS
27. To ACGO
28. Test port (primary regulator)
29. Test port (secondary/balance regulator)

* Approximate values

Key to Symbols

	Pneumatic Connection
	Filter
	Direction of Flow
	Check Valve

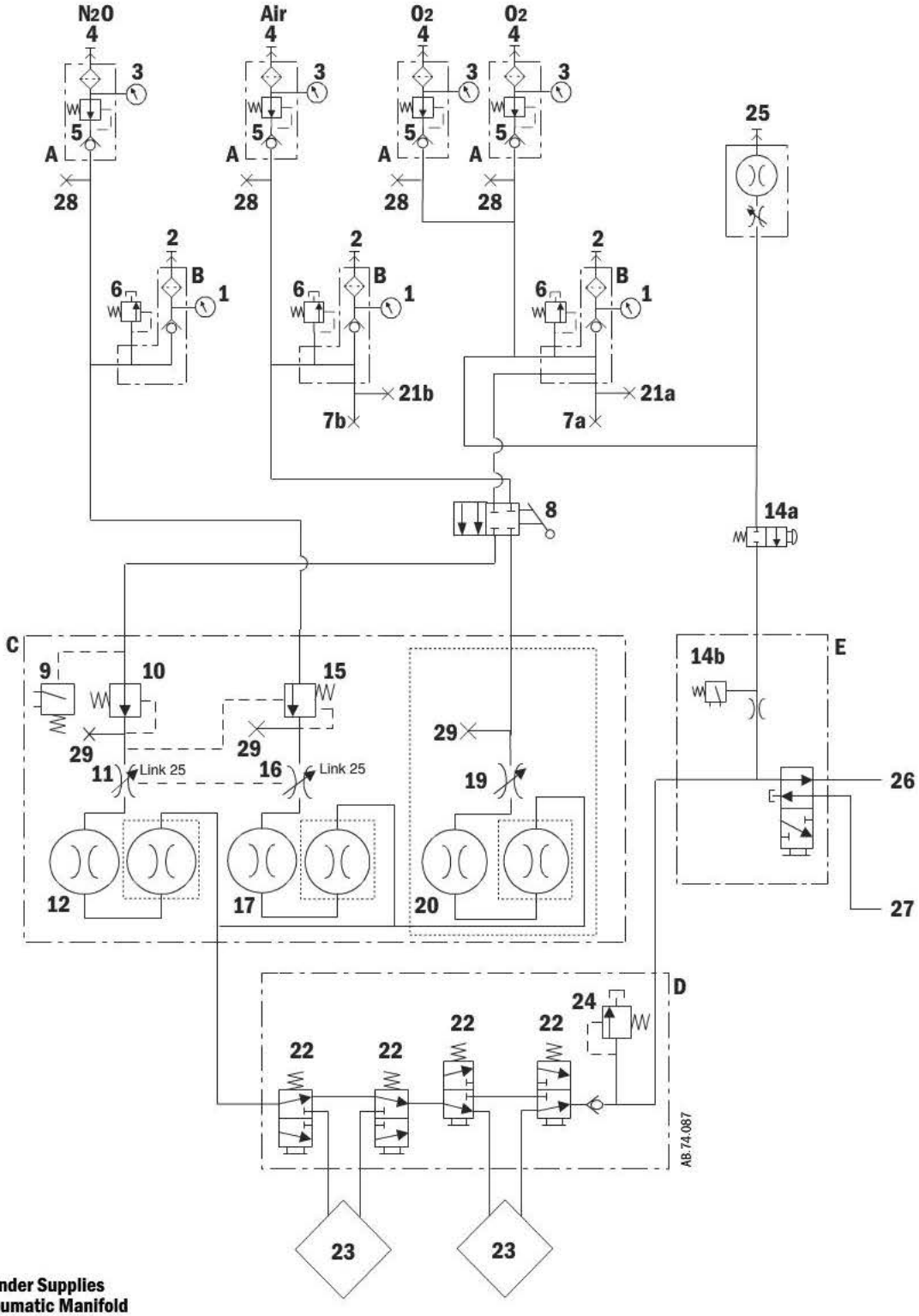

A. Cylinder Supplies
B. Pneumatic Manifold
C. Flowmeter Head
D. Vaporizer Manifold
E. ACGO Select Switch

Figure 2-1 ▪ Pneumatic circuit

2.2.2 Physical connections

Figure 2-2 shows the physical path that the gas takes.

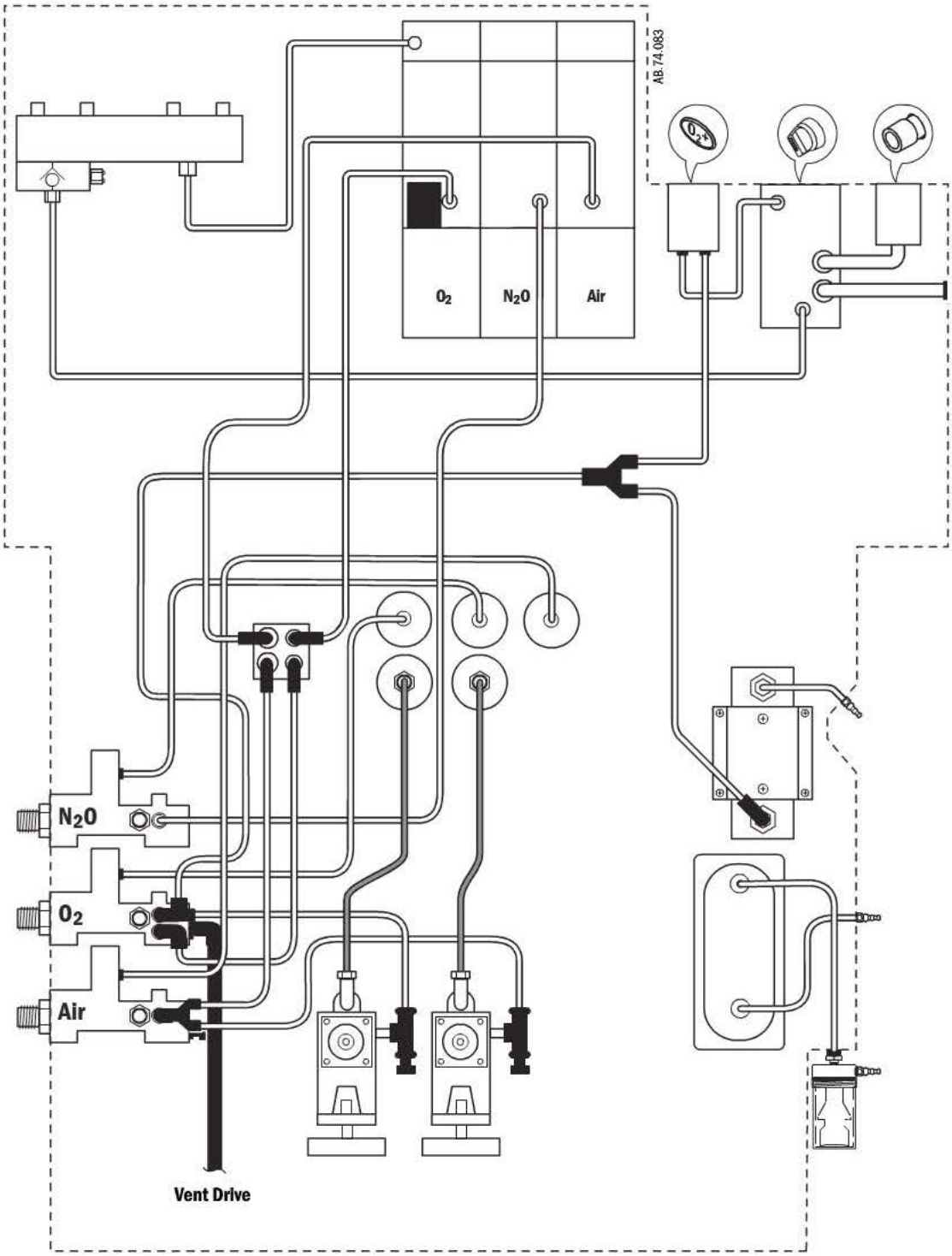

Figure 2-2 ▪ Typical tubing connections - pictorial

2.2.3 Suction regulators

Pipeline vacuum

The suction regulator (shown in Figure 2-2) uses an external vacuum source.

Venturi Drive vacuum

The suction regulator (shown in Figure 2-3) uses an internal, venturi derived vacuum source.

Drive gas (internally plumbed **Air** or **O_2**) enters the Venturi Module (**VM**) at the drive port (**A**). As the drive gas passes through the venturi module, a vacuum is created at port **B**. The drive gas exits the venturi module at port **C** and is exhausted outside the machine through the muffler (**D**).

The control port (**E**) on the venturi module responds to pneumatic signals from the front panel switch on the Suction Control Module (**SCM**) to turn the venturi vacuum drive gas on or off. The check valve (**CV**) helps prevent pressurization of the suction circuitry if the exhaust is occluded or the venturi unit fails.

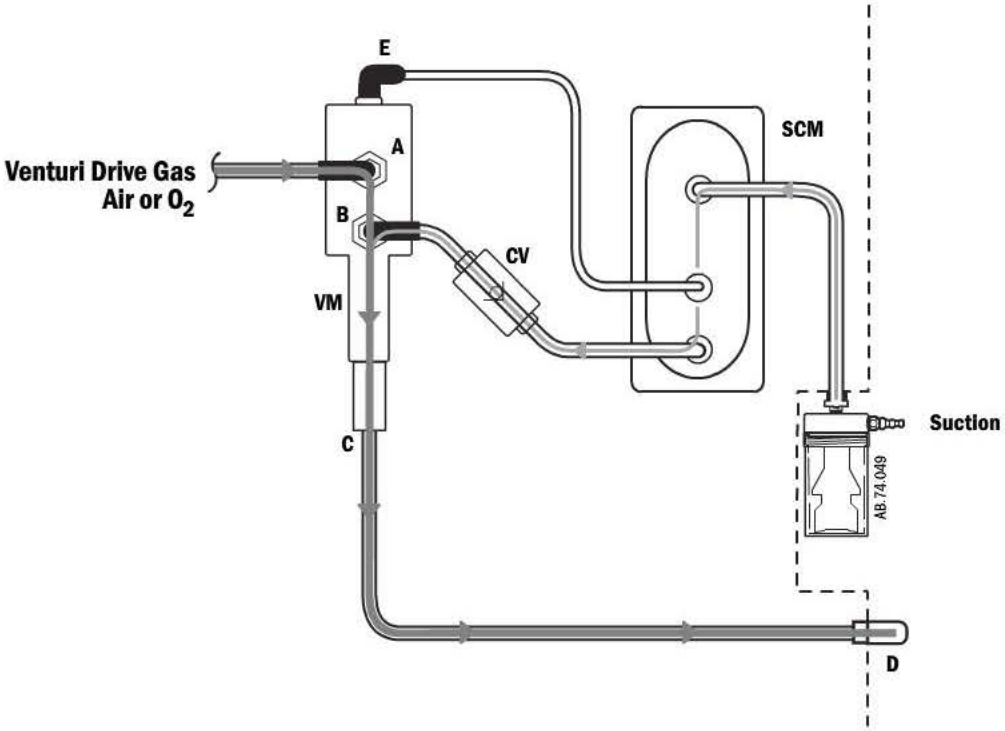

Figure 2-3 • Venturi suction

2.2.4 System switch

The system switch has two positions: On and Standby.

In the Standby position

The switch:

- Turns off the ventilator (electrical).
- Stops O_2 and Air to the flowhead (pneumatic).
- Without O_2 pressure, the N_2O balance regulator stops N_2O.

In the On position

The switch:

- Turns on the ventilator (electrical).
- Supplies O_2 and Air to the flowhead.
- With adequate O_2 pressure, the N_2O balance regulator supplies N_2O.

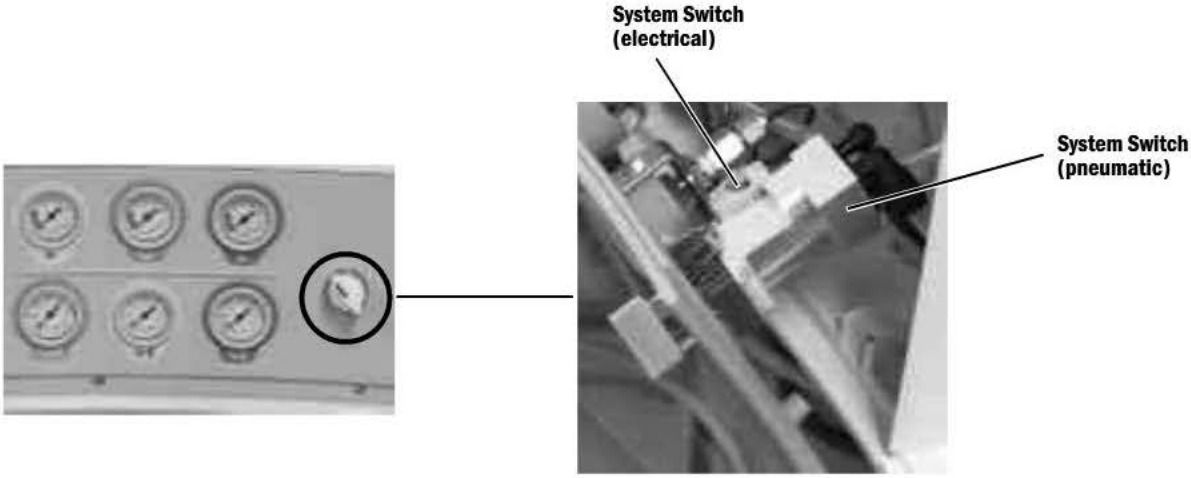

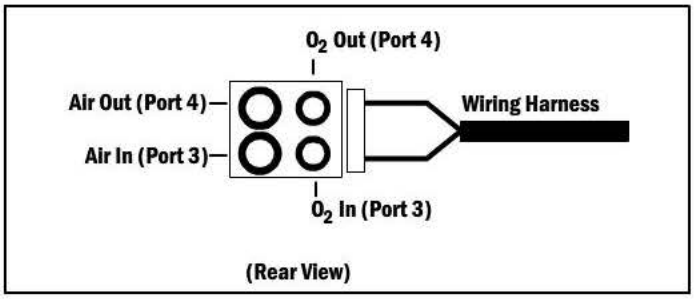

2.2.5 Flow control

Needle valves (one for each gas) adjust gas flows. Clockwise rotation decreases flow. Counterclockwise increases flow. Mechanical stops set minimum flows for all gases. The link system sets the maximum ratio of N_2O to O_2.

⚠ WARNING The Link 25 Proportioning System sets a minimum O_2 concentration in the fresh gas stream when only O_2 and N_2O are used. Use of an absorber or another gas can still cause a hypoxic mixture to be delivered to the patient, especially at low O_2 flow rates.

Minimum flows

At minimum flow, two tabs prevent clockwise rotation of the valve stem. One tab is on the stop collar; the other is on the valve body.

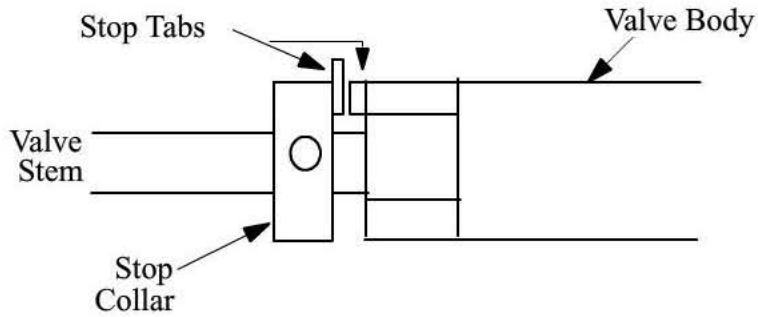

Link system

The chain link system helps assure an approximate minimum 1 to 3 ratio of flow between O_2 and N_2O. When engaged (minimum O_2 concentration), a tab on the O_2 knob is in contact with a tab on the O_2 sprocket so that the O_2 and N_2O knobs turn together:

- an increase in N_2O flow causes an increase in O_2 flow,
- a decrease in O_2 flow causes a decrease in N_2O flow.

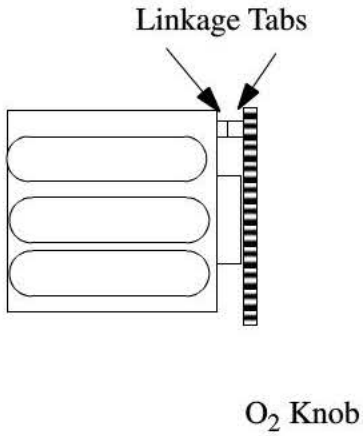

Higher concentrations of O_2 are possible when the link system is not engaged: either by reducing the N_2O flow below the point of engagement or by increasing O_2 flow above the point of engagement.

When the N_2O flow is below the point of engagement, increasing the N_2O flow turns the O_2 sprocket without changing the O_2 flow. At the point of engagement, the tab on the O_2 sprocket makes contact with the tab on the O_2 knob. Once the linkage is engaged, turning the N_2O flow control counterclockwise (increase in N_2O flow) also turns the O_2 knob counterclockwise (increase in O_2 flow) to maintain a nominal 25% minimum O_2 concentration.

Decreasing the N_2O flow from the engagement point rotates the tab on the O_2 sprocket away from the tab on the O_2 knob. Increasing the O_2 flow rotates the knob tab away from the sprocket tab. Either action increases the O_2 concentration above 21%. Sufficiently decreasing O_2 flow or increasing the N_2O flow brings the two tabs back into contact and engages the linkage.

The kick-in point is defined as the N_2O flow at which the N_2O valve becomes engaged with the O_2 valve flowing at 200 mL/min. This engagement point is an arbitrary benchmark that assists in calibrating the proportioning system. The position of the kick-in is set in the factory. During field calibration, you set the O_2 flow to 200 mL/min and the N_2O flow to the kick-in flow (usually in the range of 400 to 700 mL/min) and then install the sprockets with the O_2 knob/sprocket engaged.

2.3 Flow through the breathing system

2.3.1 Overview of flow paths

This section looks at three types of flow paths.

- **Ventilation paths:** How gas flows from the drive source (bag or bellows) to and from the patient.
- **Fresh gas paths:** Fresh gas can flow from the machine interface directly to the patient through the inspiratory check valve, or through the absorber into the expiratory flow, or directly to an external circuit through the optional auxiliary common gas outlet.
- **Scavenged gas paths:** APL or Pop-off.

2.3.2 Manual ventilation

Manual inspiration
(Figure 2-4)

The Bag/Vent switch closes the ventilator path (**B**).

Gas flows from the bag (**1**), through the absorber (**2**), into the breathing circuit module, and through a unidirectional valve (inspiratory check valve) to the patient (**3**).

During inspiration, fresh gas (**FG**) flows from the machine into the inspiratory limb, upstream of the inspiratory check valve.

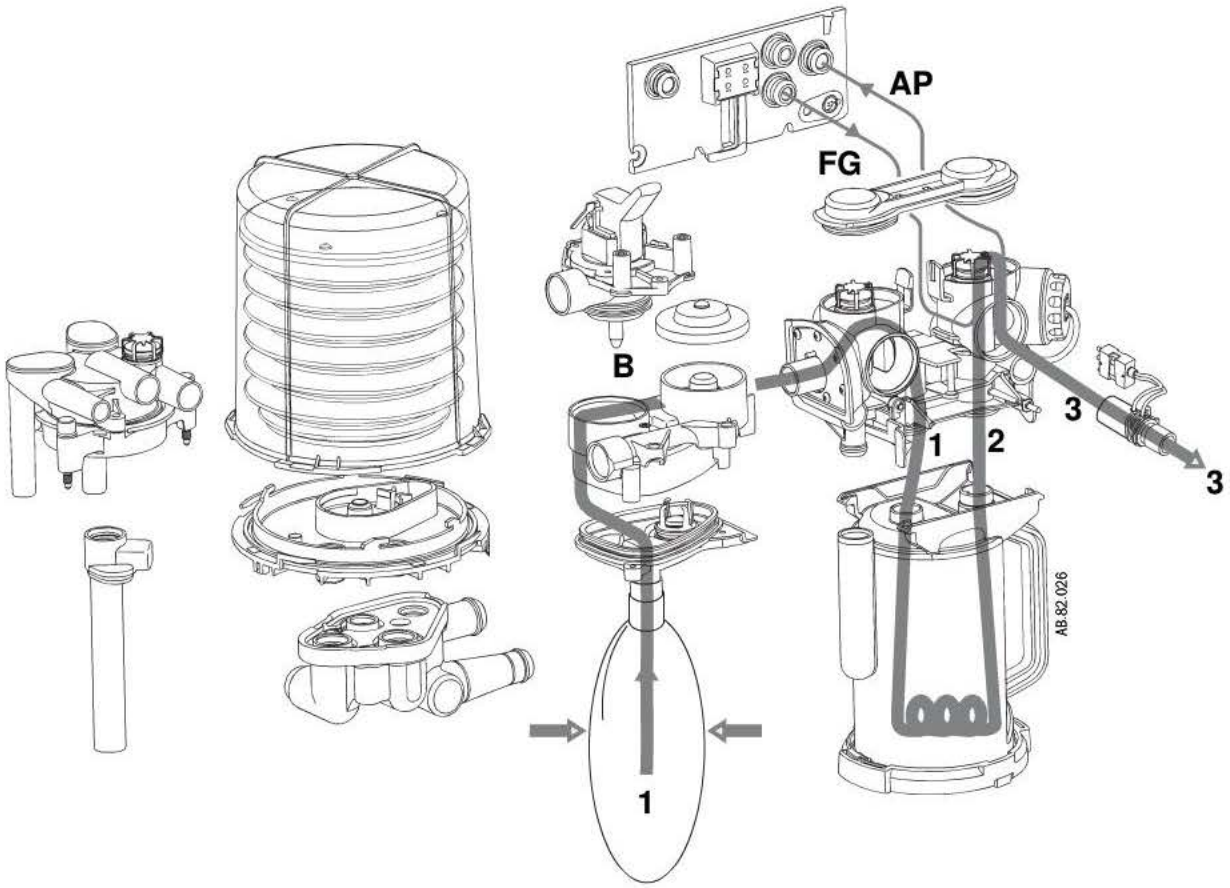

B Bag/Vent switch to Bag
FG Fresh Gas
AP Airway Pressure
1 Flow to absorber
2 Flow from absorber
3 Inspiratory flow

Figure 2-4 ▪ Gas flow during manual inspiration

Manual expiration
(Figure 2-5)

The Bag/Vent switch keeps the ventilator path closed (**B**).

Gas flows from the patient (**4**), through a unidirectional valve (expiratory check valve), and into the bag (**5**).

During exhalation, fresh gas flows backwards through the absorber (**FG**) into the expiratory limb, downstream of the expiratory check valve.

For machines that are plumbed to return sample gas to the breathing system, the returned gas (**SGR**) enters the breathing system after the expiratory check valve (Refer to section 9.12).

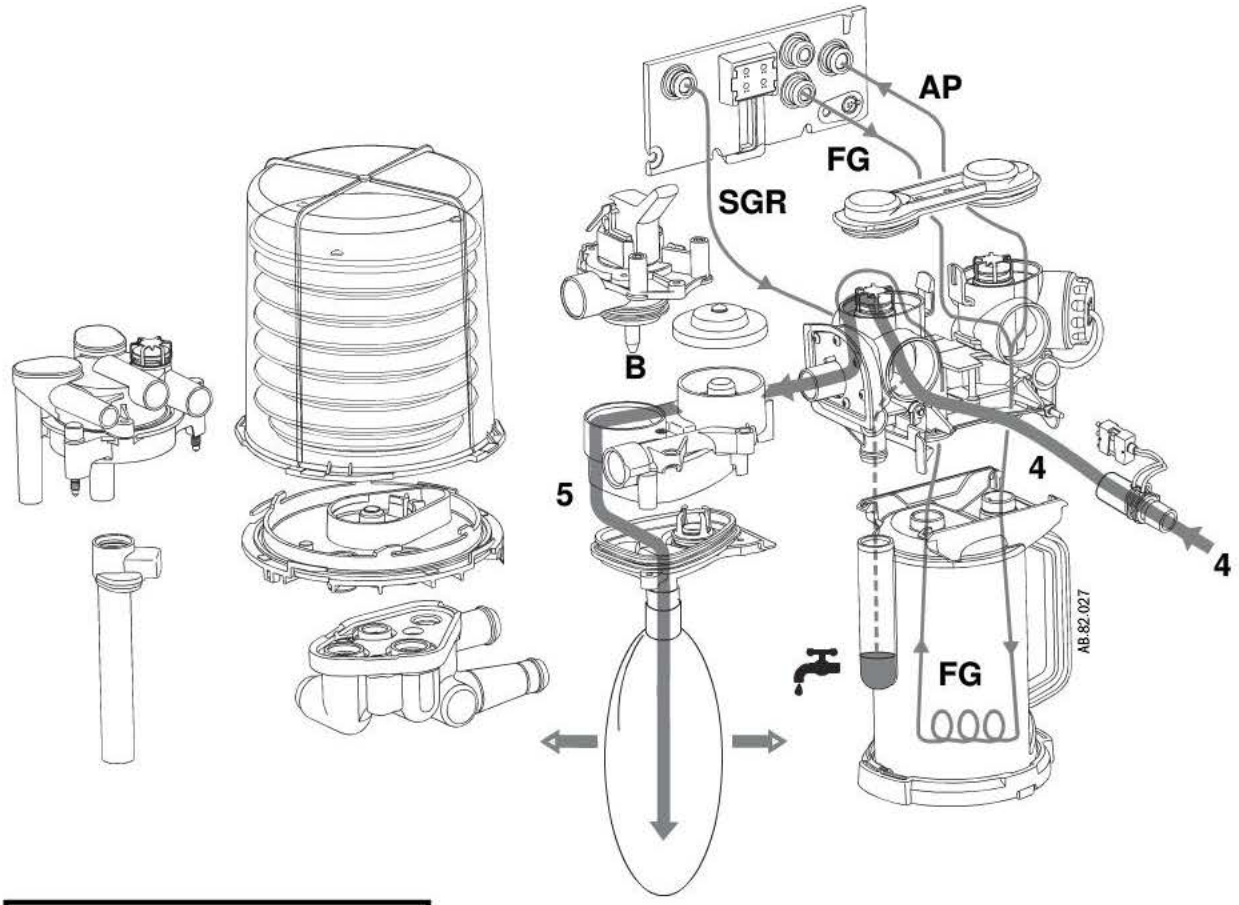

AP Airway Pressure
B Bag/Vent switch to Bag
FG Fresh Gas
SGR Sample Gas Return
4 Expiratory flow
5 Flow to bag

Figure 2-5 • Flow during manual expiration

APL Valve
(Figure 2-6)

The APL valve sets a pressure limit for manual ventilation.

As you turn the APL knob, it puts more or less force on the APL disc and seat (**D/S**). If the circuit pressure is too high (**6**), the disc and seat inside the diaphragm opens and vents gas to the scavenging system (**7**).

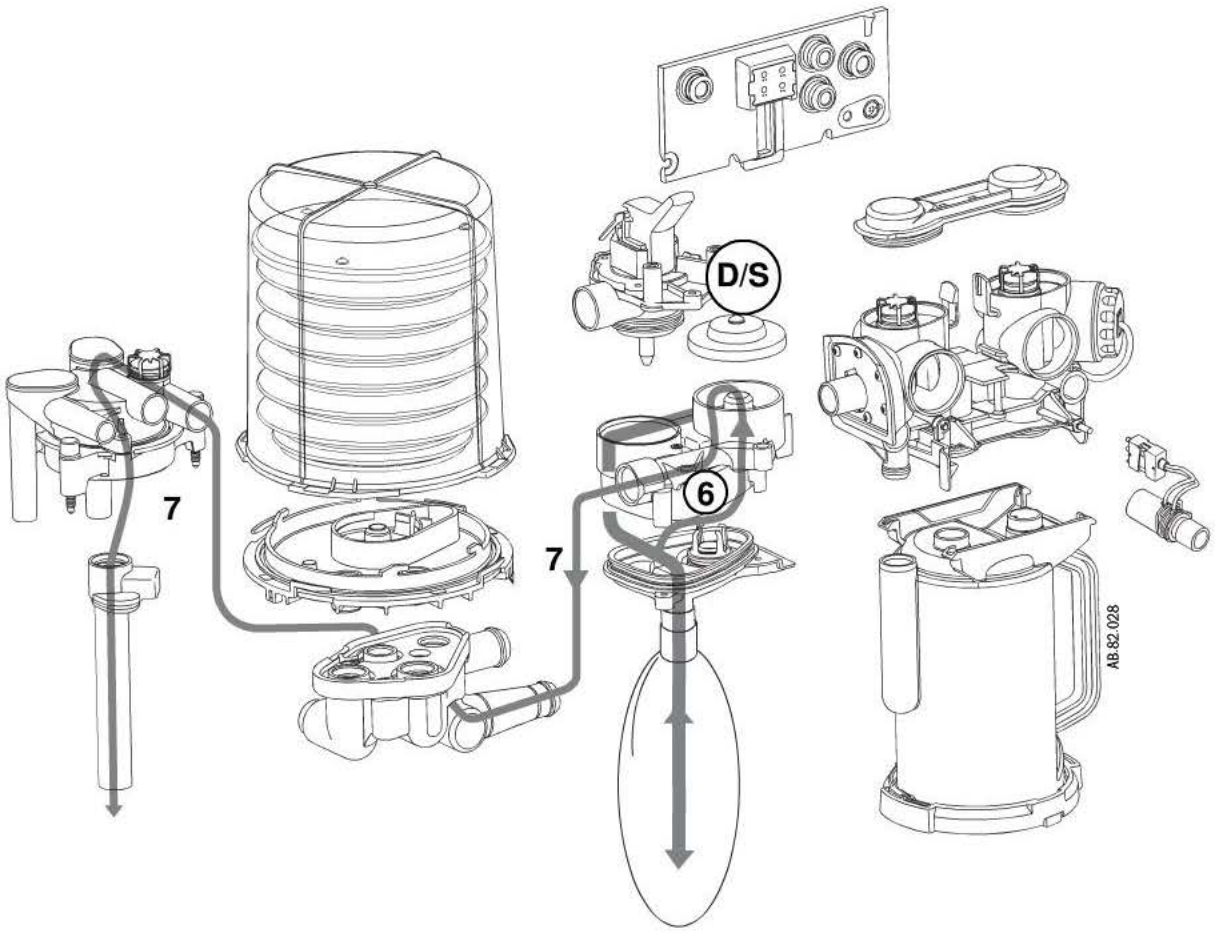

D/S APL disc and seat
6 APL flow
7 To scavenging

Figure 2-6 ▪ Flow through the APL Valve

2.3.3 Mechanical ventilation

Mechanical inspiration (Figure 2-7)

The Bag/Vent switch closes the manual path (**V**). Pilot pressure (**P**) closes the exhalation valve.

Drive gas (**D**) pushes down on the bellows. Gas flows from the bellows (**1**), through the absorber (**2**), and through a unidirectional valve (inspiratory check valve) to the patient (**3**).

During inspiration, fresh gas flows into the inspiratory limb, upstream of the inspiratory check valve.

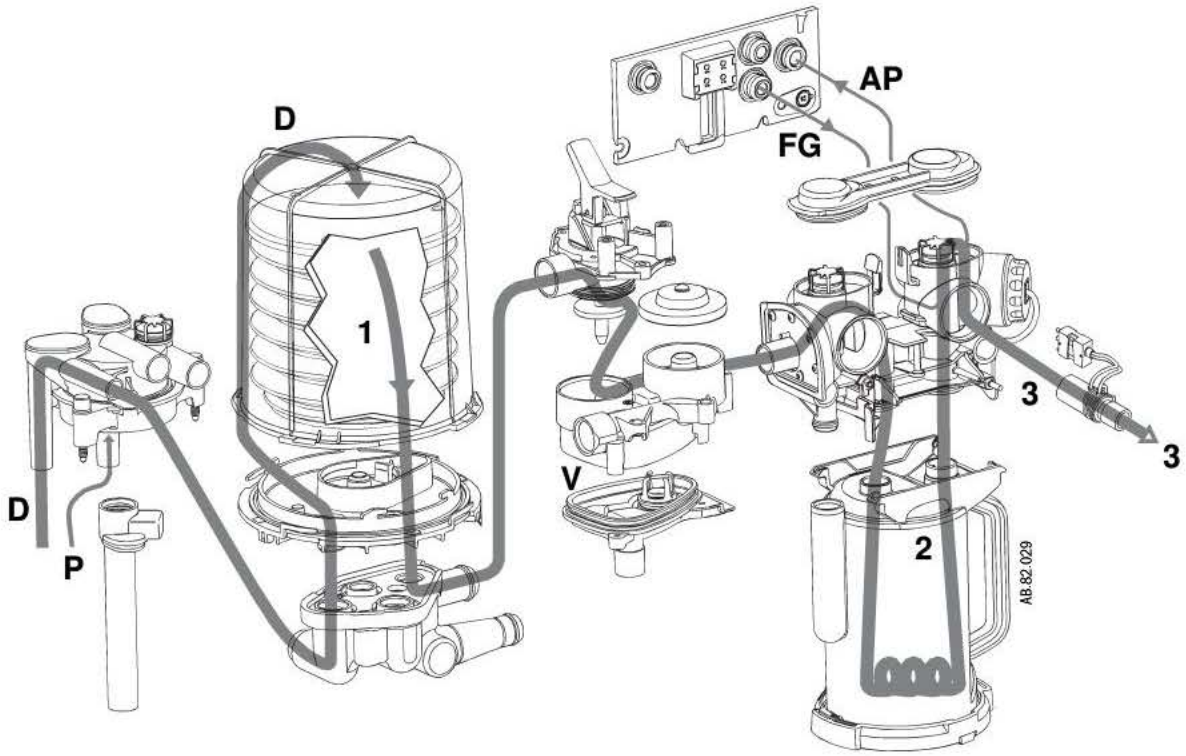

V Bag/Vent switch to Vent
P Pilot pressure
D Drive gas
FG Fresh Gas
AP Airway Pressure
1 Flow to absorber
2 Flow from absorber
3 Inspiratory flow

Figure 2-7 • Mechanical inspiration

Mechanical expiration
(Figure 2-8)

Drive-gas flow stops and the exhalation valve opens. Exhaled gas flows from the patient (**4**), through a unidirectional valve (expiratory check valve) and into the bellows (**5**). Residual drive gas (**D**) flows out of the bellows to the scavenging system (**6**).

If PEEP is selected, static pressure on the pilot port of the exhalation valve sets the PEEP level.

During exhalation, fresh gas flows backwards through the absorber (**FG**) into the expiratory limb, downstream of the expiratory check valve.

For machines that are plumbed to return sample gas to the breathing system, the returned gas (**SGR**) enters the breathing system after the expiratory check valve (Refer to section 9.12).

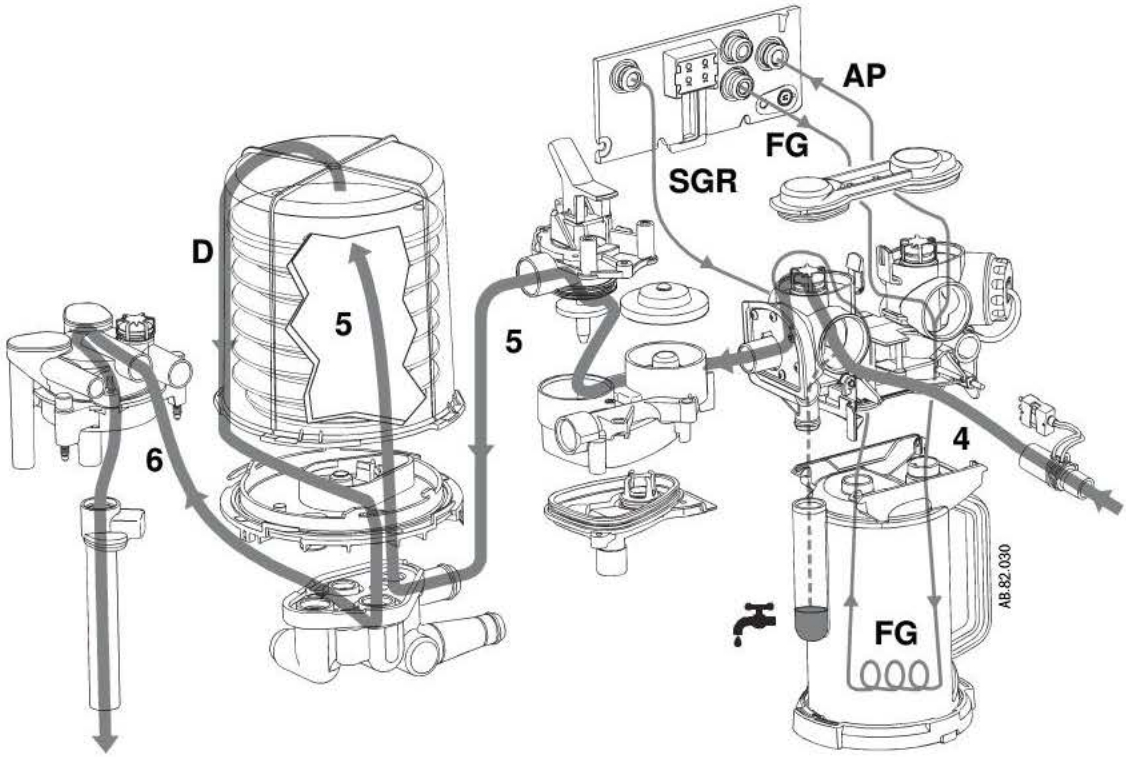

AP Airway Pressure
D Drive gas
FG Fresh Gas
SGR Sample Gas Return
4 Expiratory flow
5 Flow to bellows
6 To scavenging

Figure 2-8 ▪ Flow through the APL Valve

Pop-off valve (Figure 2-9)

The pop-off valve limits the pressure inside the bellows to 2.5 cm H_2O above the drive gas pressure. This normally occurs when the bellows reaches the top of the housing at the end of exhalation.

Excess gas (**7**) vents to the scavenging system (**6**) through the pop-off valve and the exhalation valve.

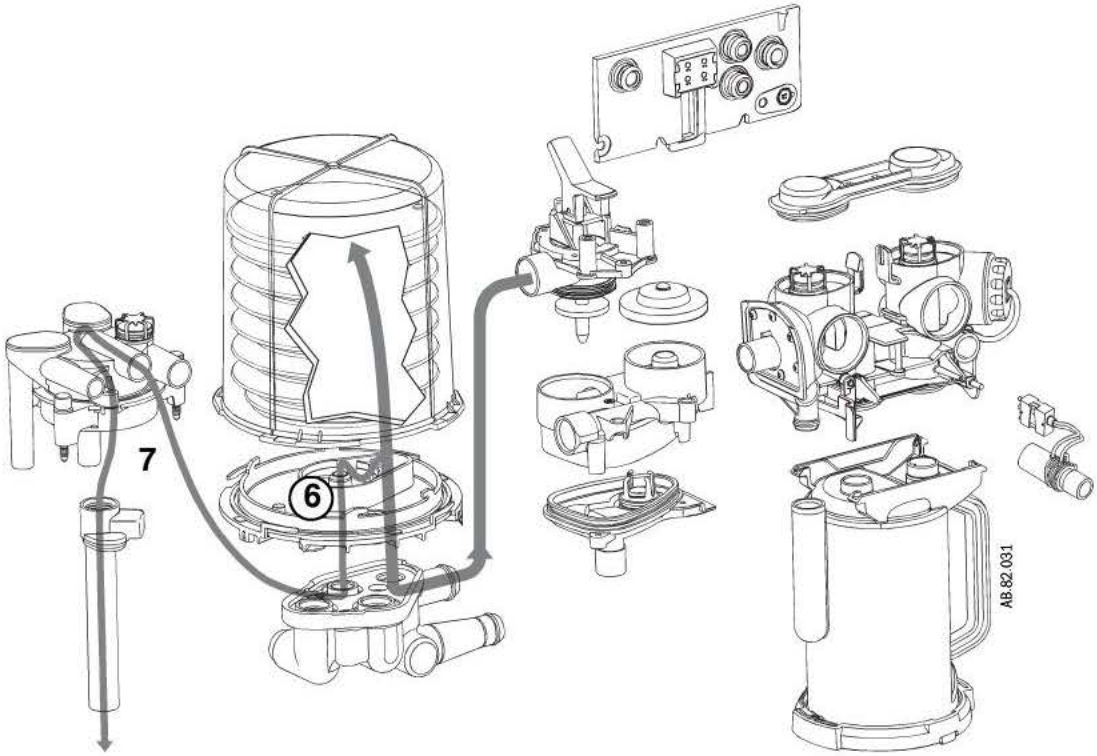

6 Pop-off flow
7 To scavenging

Figure 2-9 • Flow through the pop-off valve

2.3.4 Fresh gas and O_2 flush flow

To ABS breathing system (Figure 2-10)

Fresh gas (**1**) flows from the vaporizer manifold outlet to the ACGO Selector Switch.

With the ACGO Selector Switch in the ABS position, fresh gas flow is channeled to the breathing system.

The O_2 supply (**2**) is channeled to the O_2 Flush valve.
When activated, O_2 flush flow joins the fresh gas flow in the ACGO Selector Switch.

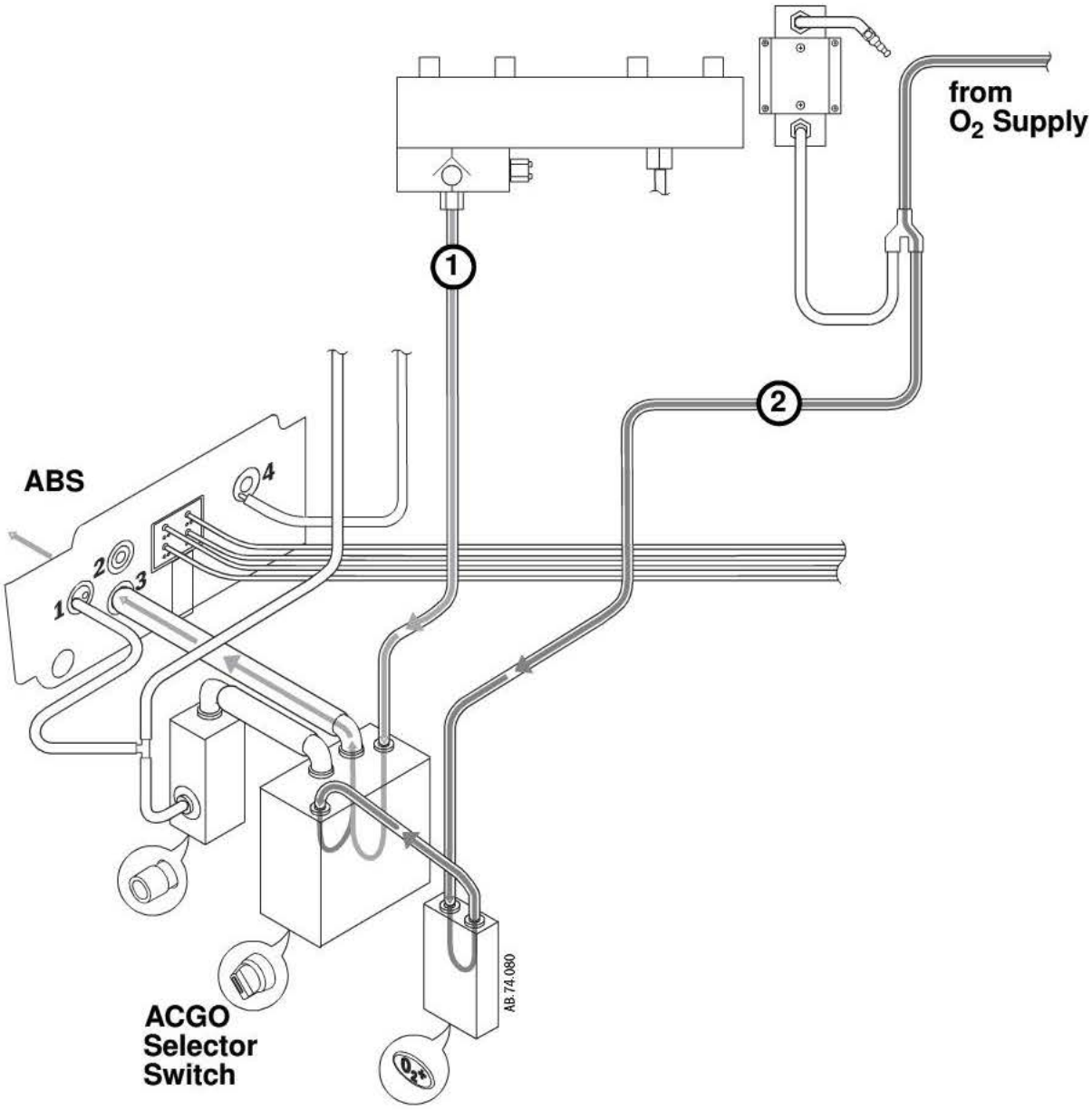

Figure 2-10 ▪ Fresh gas and O_2 flush flow (to ABS)

Auxiliary Common Gas Outlet (Figure 2-11)

Fresh gas (**1**) flows from the vaporizer manifold outlet to the ACGO Selector Switch.

With the ACGO Selector Switch in the ACGO position, fresh gas flow is channeled to the ACGO outlet.

At the ACGO outlet, a small sample is diverted to the O_2 Sensor in the ABS for O_2 monitoring.

The O_2 supply (**2**) is channeled to the O_2 Flush valve.
When activated, O_2 flush flow joins the fresh gas flow in the ACGO Selector Switch.

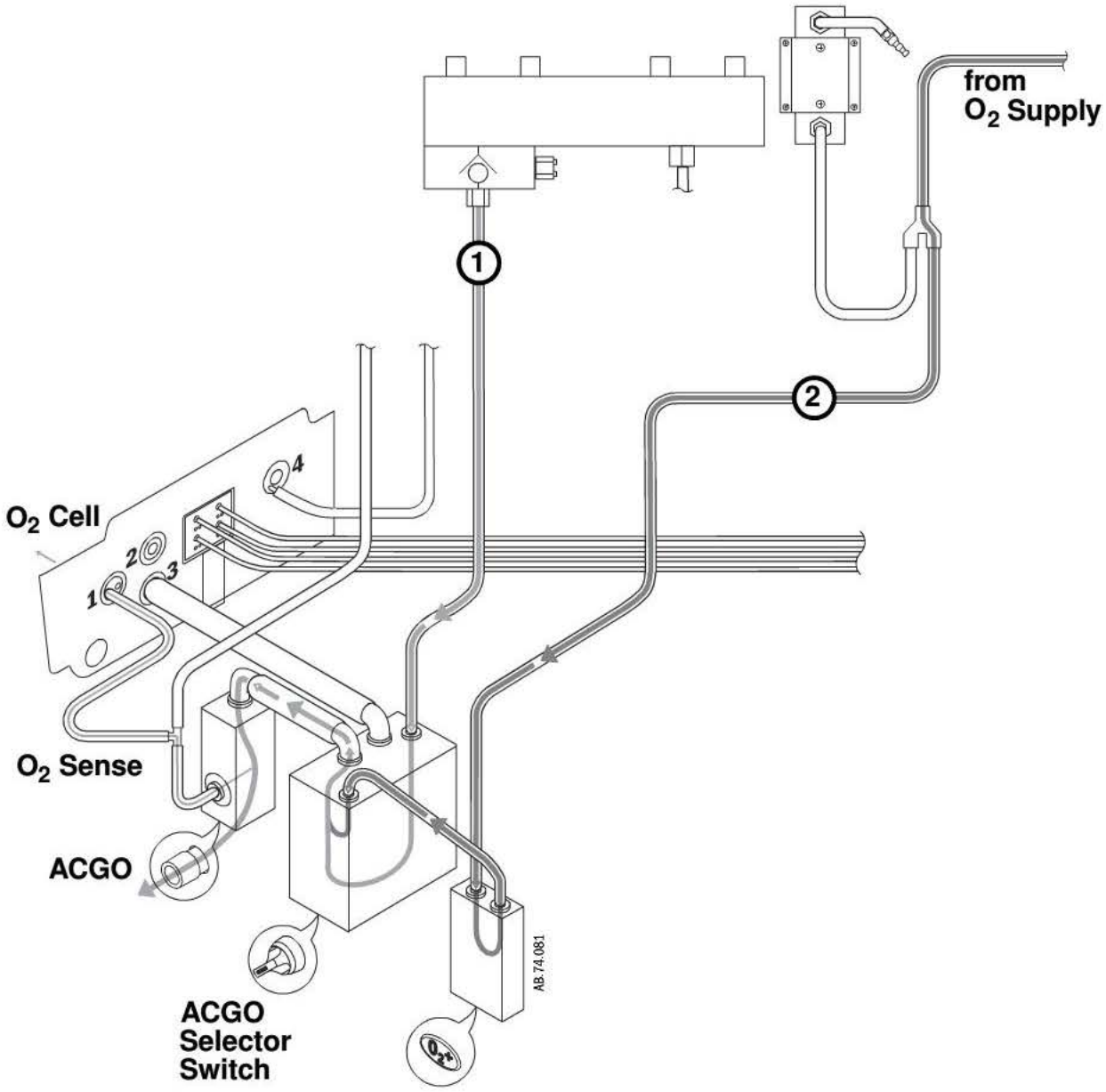

Figure 2-11 ▪ Fresh gas and O_2 flush flow (to ACGO)

2.4 Aespire 7900 Ventilator

The Aespire 7900 Ventilator is a microprocessor based, electronically-controlled, pneumatically-driven ventilator with built in monitoring systems for inspired oxygen, airway pressure and exhaled volume. The ventilator is designed to be used as a medical device assisting in the delivery of anesthesia and is part of the Aespire Anesthesia Machine.

2.4.1 Features

- Sensors in the breathing circuit are used to control and monitor patient ventilation and measure inspired oxygen concentration. This lets the ventilator compensate for compression losses, fresh gas contribution, valve and regulator drift and small leakages in the breathing absorber, bellows and system.
- Positive End Expiratory Pressure (PEEP) is regulated electronically. During mechanical ventilation the software maintains the set airway pressure. PEEP is not active when mechanical ventilation is off.
- User settings and microprocessor calculations control breathing patterns. User interface settings are kept in non-volatile memory.
- Mechanical ventilation is started with the Bag/Vent switch on the breathing system.
- Ventilator hardware is regularly monitored by software tests.
- An RS-232 serial digital communications port connects to and communicates with external devices.
- An exhalation valve modulates flow in the pressure mode.
- Pressure and volume modes are selectable by the operator.
- All pneumatic components are located on one manifold.
- Exhausted drive gas and bellows pressure relief valve gases are mixed and go through the ventilator exhalation valve.
- Exhalation valve block is autoclavable.
- Excess fresh gas released from the bellows and ventilator drive gas is transferred from the exhalation valve to the Anesthesia Gas Scavenging System (AGSS).
- Optimized for service with a low number of components.

2.4.2 Safety features

- Airway overpressure protection linked to Pmax setting.
- Dual redundant, software independent, airway overpressure devices.
- Volume over-delivery limits and protection.
- Proprietary hose connections and fixed manifolds.
- 10 VA electrical power limiting to potential oxygen enriched environment.
- 150 psi burst overpressure protection.

2.5 Aespire 7900 Ventilator components

Components of the ventilator are found in different locations on the Aespire Anesthesia Machine. The ventilator package consists of:

1. Control Module (Ventilator Display)
2. Pneumatic engine
3. Enhanced Sensor interface board (ESIB)
4. Ventilator control electronics

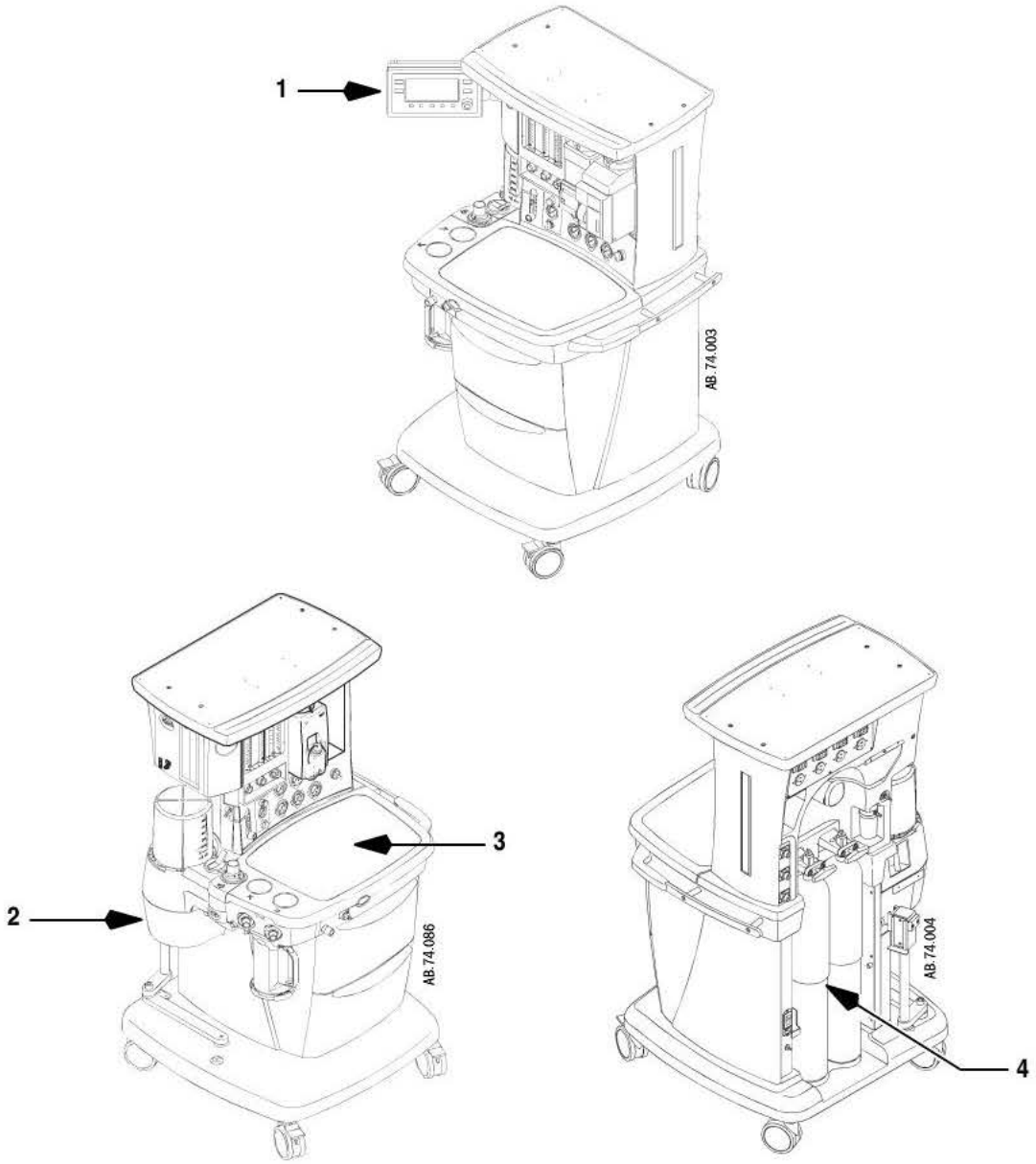

Figure 2-12 • Location of 7900 ventilator components

2.5.1 Ventilator control electronics

The ventilator control electronics is found in the lower electrical enclosure at the rear of the Aespire 7900 machine.

The ventilator control electronics includes a universal power supply and the integrated CPU board. The CPU board includes the regulated power circuits and the digital circuits.

The universal power supply receives AC power from the machine's AC Inlet module through the isolation transformer, inline fuses, and separate line filter. It converts AC power to raw DC power that feeds into the power supply circuits of the integrated CPU board.

All the power necessary to operate the ventilator and light package comes from the power ciruits. The digital circuits controls the operation of the ventilator.

A 12 volt battery provides backup power to operate the ventilator in case of mains power failure.

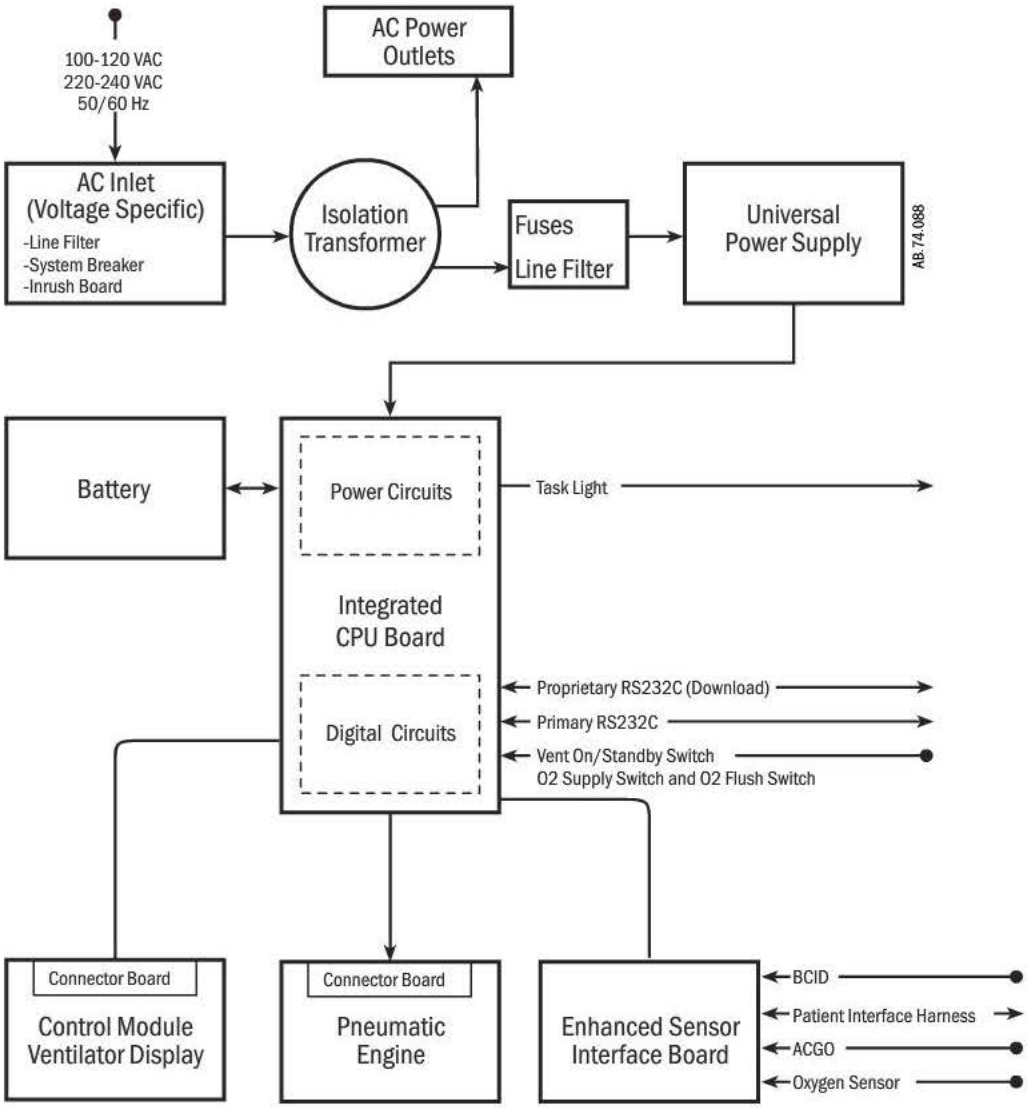

Figure 2-13 ▪ Aespire 7900 Ventilator functional block diagram (Integrated CPU)

2.5.2 Control panel and display

The control panel on the Aespire 7900 Ventilator is mounted on a folding arm on the left side of the machine. It permits you to grip the panel and push the control buttons with your thumbs.

The control module (ventilator display) includes four submodules:

- The electroluminescent (EL) display
- The keyboard front panel
- A rotary encoder
- A speaker

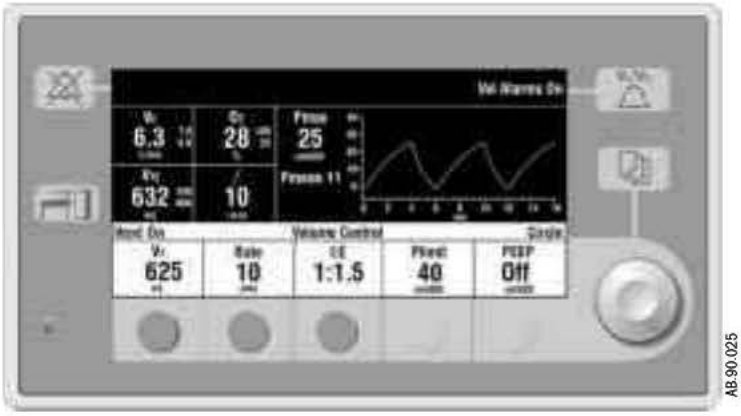

Figure 2-14 • Ventilator control panel

The keyboard and rotary encoder are used to control the operations of the ventilator. The front panel uses a three step – selection, change, and approve – setting scheme to prevent unwanted selections. The speaker supplies audio input to the operator.

Logical layout of primary controls is left to right in the sequence: tidal volume or inspiratory pressure level, respiratory frequency, I:E ratio, maximum inspiratory pressure, and PEEP (positive end expiratory pressure).

Primary Ventilator interfaces include:

- Display
- Soft keys
- Rotary encoder (control wheel)
- Knob button (control wheel)
- LED
- Audio

2.5.3 Enhanced Sensor Interface Board (ESIB)

The Enhanced Sensor Interface Board (ESIB) for the Aespire 7900 Ventilator is located under the tabletop.

The ESIB serves as the interface between the ventilator CPU board and the breathing circuit sensors and several machine switches.

The ESIB processes signals from the:

- Inspiratory and expiratory flow sensors
- O_2 sensor
- Auxiliary Common Gas Outlet (ACGO) switch
- Bag/Vent switch
- ABS On switch
- Drive Pressure Limit (DPL) switch (plumbed to manifold pressure)
- Manifold pressure transducer
- Patient airway pressure transducer

Note: The ESIB includes additional functions that are not used in the Aespire 7900 machine

- Module ID (hard wire for circle circuit)
- Canister release switch (closed by default)
- Absorber CO_2 Bypass switch (off by default)

Figure 2-15 • Enhanced Sensor Interface Board (ESIB)

2.5.4 Pneumatic Vent Engine

The pneumatic Vent Engine is located in the back chamber of the breathing system that is shielded to contain EMI emissions. The enclosure includes the Vent Engine and the Vent Engine Connector Board.

The pneumatic Vent Engine comprises the hardware that drives the ventilator bellows. It includes:

- a drive gas inlet filter
- a gas inlet valve (GIV)
- a supply gas pressure regulator
- a flow control valve
- a drive gas check valve
- a mechanical over pressure relief valve (MOPV)
- a bleed resistor
- a free-breathing check valve

Figure 2-16 • Pneumatic Vent Engine

2.6 Electrical

2.6.1 Block diagram

The Aespire 7900 Ventilator electronic/electrical subassemblies or modules include:

- Universal power supply (AC to DC converter)
- CPU board (with power supply and digital circuits)
- Control module (Ventilator display)
- Enhanced sensor interface board (ESIB)
- Sealed lead acid battery

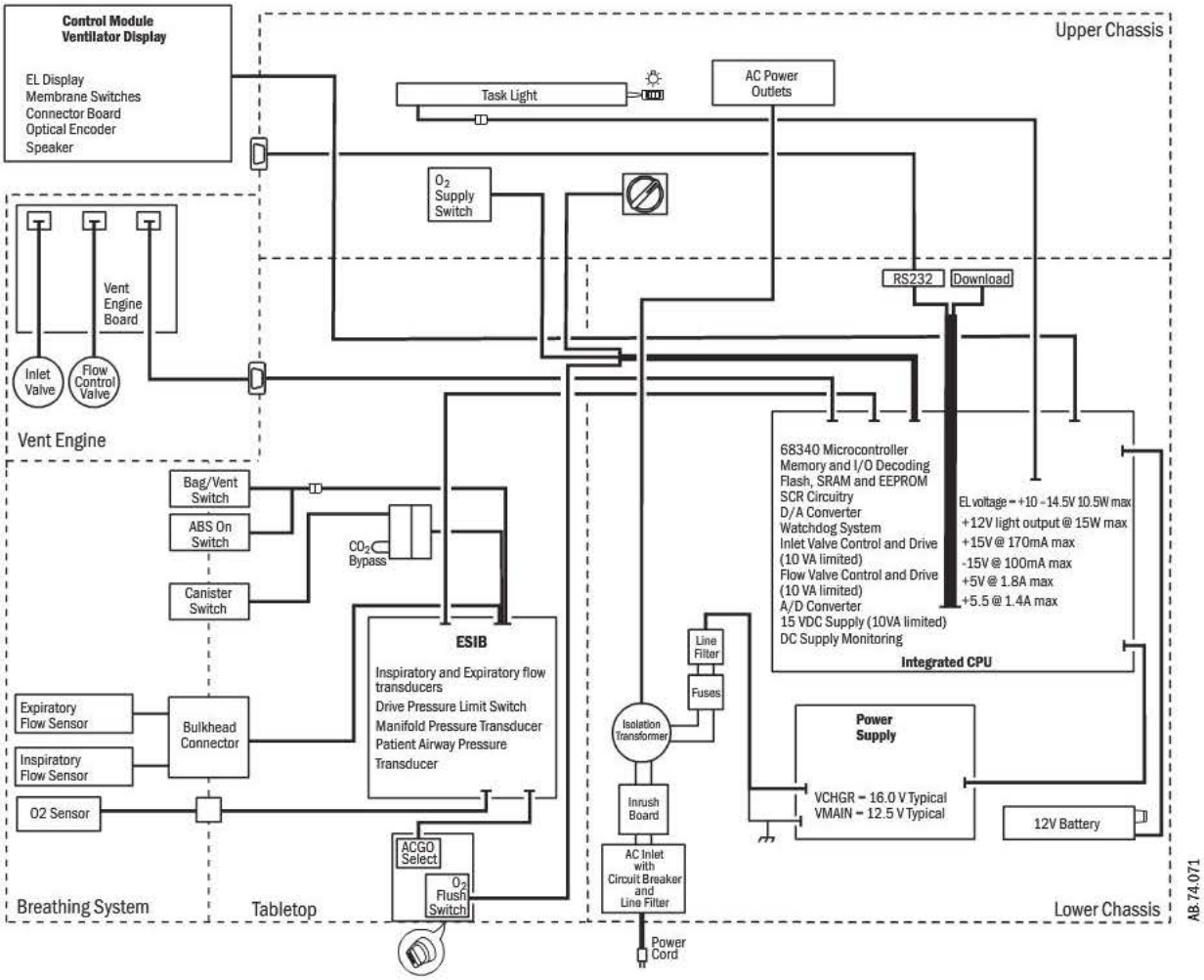

Figure 2-17 • Electronic functional block diagram (Integrated CPU)

2.6.2 Power supply

Aespire machines with a 7900 Ventilator use a universal power supply for AC to DC conversion. The remainder of the power supply functions are derived in the power supply circuits on the integrated CPU:

- DC to DC step-down converter
- Battery charger
- Multiple output DC regulator
- Battery charge/discharge current monitor
- Battery voltage monitor
- Task light power supply 12V

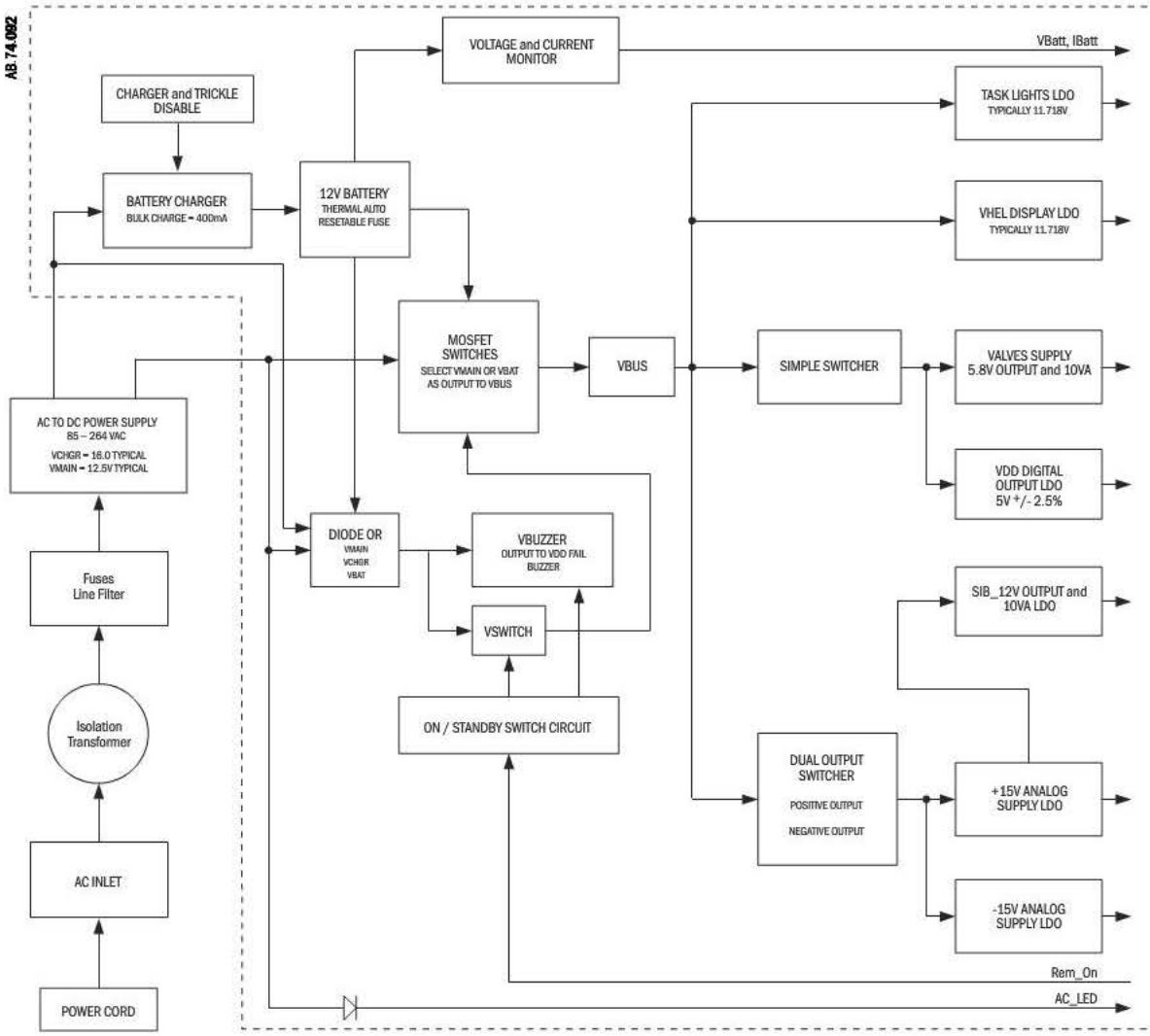

Figure 2-18 ▪ Ventilator power supply (Integrated CPU)

2.6.3 Sealed lead acid battery

A sealed lead acid battery supplies battery backup for the Aespire 7900 Ventilator. The Aespire 7900 Ventilator is not a portable unit. Batteries for the ventilator are used as back up power in case of a power failure. Thus the battery is in a float charge state most of the time. Batteries meet the following:

- Capacity to operate unit for 30 minutes.
- Long float charge life.
- Battery pack is internally fused - in line replaceable.
- Battery terminals and connecting wires are protected against short circuits.

Input

Nominally 13.7 VDC at 25°C during float charge.

Output

+10V to +14.8VDC during discharge

2.6.4 CPU assembly

The CPU assembly contains all of the major circuit functions necessary to control ventilator operation, they are part of the digital circuits section of the integrated CPU board.

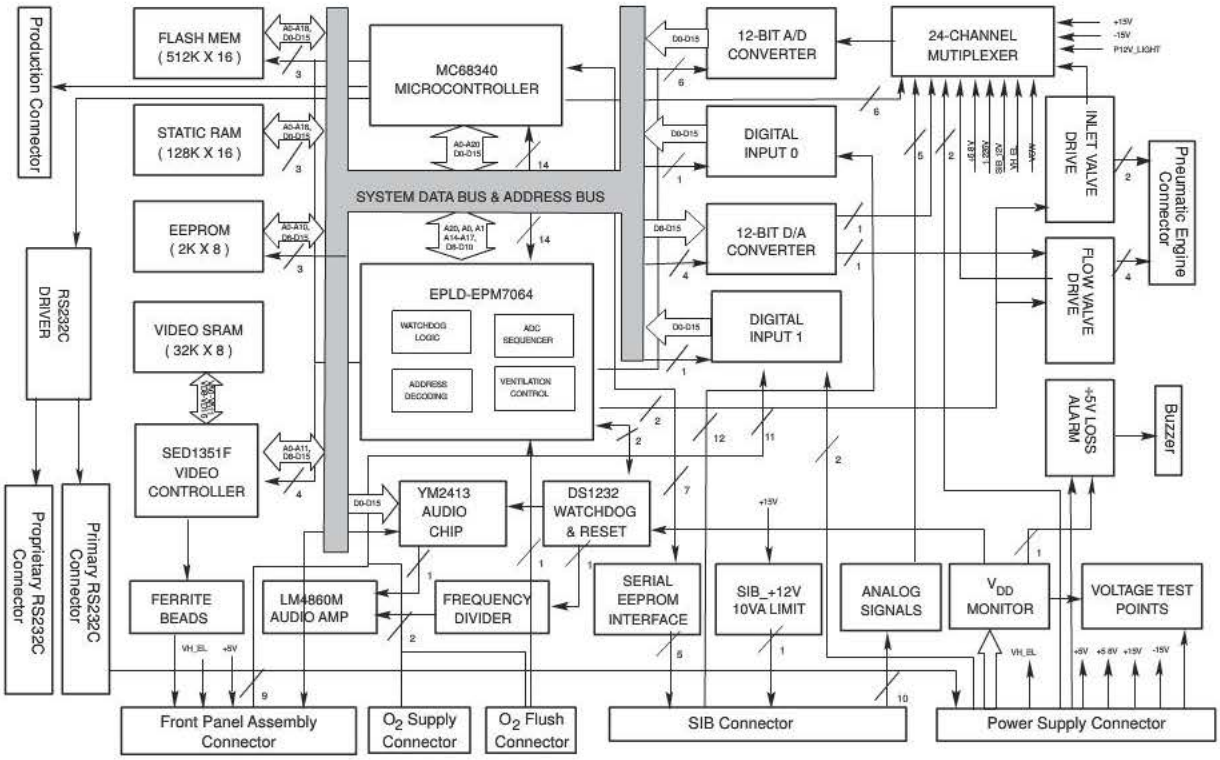

Figure 2-19 • Ventilator CPU block diagram

Motorola 68340 processor core

The CPU core consists of the following internal functions:

- Bus access control signals for all memory and peripheral devices
- Interrupt handling
- Clocks and timers for the system
- Background software development mode
- Two RS232C serial I/O ports
- Baud rate generator for serial ports
- Hard (power-up) and soft (watchdog error) reset generation
- Data bus buffers
- Memory and I/O decoding
- Program memory
- Safety Relevant Computing (SRC)
- Watchdog system
- Data acquisition
- Flow valve control
- Inlet valve drive
- Front panel interface
- Audio alarm
- Regulator output/manifold pressures

System clock

An external 32.768 kHz crystal is used with the internal clock synthesizer to generate a 24.12 MHz system clock.

Periodic interrupt timer

The periodic interrupt timer is the time base for the Real Time Operating System.

Software watchdog timer

The software controlled internal watchdog timer guards against program execution going astray.

External bus interface

The external bus interface handles the transfer of information between the CPU32, external memory and peripherals.

Serial communications module

Timing reference

An external 3.6864 MHz clock oscillator is used as the timing reference for the Baud Rate Generator.

Configuration

Both of the serial communication channels are configured as full-duplex asynchronous RS232C ports. The internal Baud Rate Generator establishes the communication baud rate, with a higher limit of 19.2k Baud.

Special operating modes

The serial channels are capable of operating in various looping modes for self testing as well as for remote testing of serial communications. These tests include automatic echo and remote loop-back.

Memory and I/O decoding

Microprocessor Chip Selects

The four programmable chip selects from Motorola 68340 access external memory and peripheral circuits, providing handshaking and timing signals as well as a wait state generation, watchdog logic and ventilation control signals.

I/O lines

Spare I/O lines are used for digital control and/or sense lines.

Timer modules

Counter/timer #1

The first counter/timer module is used to monitor the MC68340 system clock frequency. The external 3.6864 MHz baud rate clock is the time base for this measurement.

Counter/timer #2

The second counter/timer module can be used as desired by the application software. The time base for this timer is the internal 24.12 MHz system clock.

Program memory

Flash memory

Two 512K x 8 Flash memory devices are used. This memory contains the real time operating system (RTOS) and software code. The Flash memory devices are socketed.

System RAM

This memory consists of two 128 K x 16 CMOS static RAMs with on-board expansion capability to 512K x 16 SRAMs.

Non-volatile memory

This memory consists of a single 2K x 8 EEPROM and stores information which needs to be retained when the system is powered down. This includes user selectable operating parameters and a system error log.

Safety Relevant Computing (SRC)

This section addresses the Safety Relevant Computing (SRC) requirements of DIN V VDE 801. The electronic hardware design provides the necessary capability for meeting these requirements. This includes:

- Digital monitoring of selected control signals.
- Analog monitoring of supply voltages, internal control voltages, feedback signals from the flow and inlet valves, and battery voltage.
- Automatic switch-over to battery operation in the event of an interruption in ac power.
- Use of the software watchdog timer in the 68340 processor for temporal monitoring, with direct de-energizing of the flow and inlet valves in the event of a non-recoverable error.
- Use of an operating mode watchdog for logic and timing monitoring, with direct de-energizing of the flow and inlet valves in the event of a non-recoverable error.
- Monitoring of the system clock to detect an operating frequency out of an acceptable range.
- Use of a redundant high pressure limit safety switch in the bellows drive circuit which directly de-energizes the flow valve.

Watchdog systems

MC68340 software watchdog timer

Each mode of ventilator operation has a unique watchdog toggle channel that is initialized at the legal program entry for that mode. The watchdog is then toggled by writing that channel number to the watchdog check address during any program paths that occur only in the selected mode of operation. An error is detected if program flow is disrupted and an illegal sequence tries to toggle the watchdog with its own different channel number. Each mode includes multiple accesses to its watchdog channel number to improve detection of incorrect program flow.

Watchdog operation

The channel number must be the same for both watchdog initialization and toggle channel number. A difference is detected as errant program execution and causes an immediate level 7 interrupt (IRQ7).

A legal watchdog toggle must occur at least once every 35 msec to prevent a time-out and subsequent level 7 interrupts.

A system reset will occur between 62.5 msec and 250 msec if no legal toggle addresses occur by that time. Multiple level 7 interrupts will occur prior to a reset. The output of this watchdog is connected to IRQ7 on the 68340 processor.

Error response sequence

Errors detected by either watchdog are handled in the following sequence:

- At the first detection of any error, a watchdog responds by issuing an IRQ7 interrupt.
- If the exception handler software for IRQ7 cannot correct the error, then the next detection of an error causes a soft system reset.
- If the error still cannot be corrected, then an audio alarm sounds (independent of processor interaction) and a cyclic soft reset continues until the error is corrected or the system is powered down.

DATA acquisition

The data acquisition system for the Aespire 7900 Ventilator consists of two major building blocks. The first is an analog to digital converter (ADC) system and the second is a digital to analog converter (DAC) system.

This portion of the Aespire 7900 Ventilator allows the microprocessor to interface with valves and pressure transducers. The data acquisition system is also used for internal monitoring of safety relevant signals.

The ADC system is designed to meet the following specifications:

Resolution	12 Bits
Input Voltage Range	0 - 4.095 Volts (1mV/LSB)
Number of Channels	24
Total Conversion Time	8 to 8.63 µsec max
Integral Nonlinearity	± 1 LSB max
Differential Nonlinearity	± 1 LSB max (guaranteed monotonic)
Full-Scale Error	± 6 LSB max
Unipolar Offset Error	± 3 LSB max

The DAC system is designed to meet the following specifications:

Resolution	12 Bits
Number of Channels	1
Settling time to 0.01%	30 µsec max
Output Voltage Range	0 - 4.095 Volts (1mV/LSB)
Integral Nonlinearity	± 1 LSB max
Differential Nonlinearity	± 1 LSB max (guaranteed monotonic)
Full-Scale Error	± 9 LSB max
Zero-Scale Error	+ 4 LSB max

Analog to digital converter System

A 24 channel multiplexer and buffer amplifier precedes the A/D converter. The manifold pressure, patient pressure, inspiratory flow and expiratory flow signal inputs to the multiplexer are filtered with an antialiasing filter. Other inputs are filtered by low pass filters.

Signals that are monitored by the ADC system include:

- Patient Pressure
- Manifold Pressure
- Inspiratory Flow Sensor
- Expiratory Flow Sensor
- Flow Current sense
- Flow DAC output
- Inlet Valve Current sense
- O_2 Concentration
- Power Supplies
- Battery Backup system

The ADC system is based around a 12 bit A/D converter. It operates from ± 15V power supplies except for the A/D converter. The 12-bit converter is powered by a filtered +5V supply and protected from over-voltage.

Multiplexer and buffer amplifier

The multiplexer settles quickly, within 8 µ sec to 0.01%, to be stable for the ADC 12-Bit conversion and to maintain the overall 20 µ sec conversion time. The system bandwidth requirement is from dc to 20Hz. The multiplexer is an 8 channel fault protected device and the amplifier used as a buffer to drive the A/D converter (AD822AR).

A/D converter

The MAX191BCWG is a 12-Bit converter that operates from a single 5 Volt power supply. The clock frequency to run the A/D converter is 1.507MHz. It is derived from the microprocessor system clock.

With a 1.507MHz clock, the conversion time of the A/D converter is 13 clock periods or 8.63 µ sec.

The MAX191BCWG has the following unadjusted dc accuracy specifications:

Integral Nonlinearity	± 1 LSB max
Differential Nonlinearity	± 1 LSB max (guaranteed monotonic)
Full-Scale Error	± 3 LSB max
Unipolar Offset Error	± 2 LSB max

Voltage reference

The MAX191BCWG has an internal 4.096 Volt ±1 mV voltage reference that can be adjusted with a potentiometer. This reference voltage is buffered and used for the digital to analog converter reference.

Flow valve control

The flow valve control circuit consists of a D/A converter and a voltage to current conversion circuit.

D/A conversion

The D/A conversion for the flow valve drive circuit is based around the MAX530 12-Bit DAC. The output of the DAC is fed to an input of the A/D converter multiplexer allowing the microprocessor to monitor the DAC output.

The MAX530 operates from the same 5V power supply as the A/D converter. The output voltage range of the converter is 0 to 4.095V (1mV per LSB).

The MAX530BCWG has the following dc accuracy specifications:

Integral Nonlinearity	± 1 LSB max
Differential Nonlinearity	± 1 LSB max (guaranteed monotonic)
Full-Scale Error	± 1 LSB max
Zero-Scale Error	+ 4 LSB max

Flow valve drive circuit

The flow valve drive circuit does a voltage to current conversion of the DAC output voltage signal FLW_DAC. With a 0 to 4.000 Volts input, the drive circuit outputs 0 to 1.0 Amps typical into a 3 ohm load. This current is passed to the flow valve and is used to proportionally control the flow valve during mechanical ventilation. This circuit does not require adjustment and is accurate within ± 2% of full scale.

This circuit also limits the flow valve output to less than 10VA under normal operation and under a single fault condition. This is a requirement of the international regulation IEC 601-2-13.

A signal proportional to the actual drive current is input to the A/D converter to permit the processor to monitor the current and detect fault conditions.

Gas inlet valve drive circuit

This circuit consists of a low-dropout regulator providing a regulated 5 Volts to the inlet valve when enabled by the microprocessor. The SHUTDOWN pin of the regulator provides on/off control.

This regulator has an output current of 250mA. It has an internal current limit of 530mA max. This keeps the output under 10VA in a single fault condition.

A current sensing circuit is included to let the processor monitor the inlet valve current via the A/D converter system and detect fault conditions.

Front panel display interface

All signals to and from the Front Panel are protected from ESD through the use of transient suppression devices and appropriate filtering. All of these signals are routed through a single connector from the microcontroller board to the front panel assembly.

EL display controller

The S-MOS SED1351F flat panel display controller drives 480 horizontal pixels by 240 vertical pixels of the EL display. Ferrite beads filter the signals from the display controller to the display.

Video display memory

This memory consists of one high speed 32K x 8 CMOS static RAM directly connected to the display controller. The video memory is mapped into memory space, but access is controlled by the display controller to ensure that the EL display is not disturbed during an access by the processor.

Membrane switch inputs

These signals are electronically debounced by an RC filter and sampled by the 68340 processor.

LED driver outputs

The AC ON LED is turned on directly from the AC power applied.

Rotary encoder input

This quadrature signal is debounced and routed to a quadrature clock converter which interrupts the 68340 processor at each detent position.

Audio alarm

The circuit consists of a programmable sound generator and a LM4860M audio amplifier. The sound generator interfaces directly to the CPU and the audio amplifier drives an 8 ohm speaker. It is normally powered from the low dropout regulator using the 5.8 V supply. In the event of a loss of the 5.8 V supply, the sound generator will be powered by the VDD supply to prevent loading of the processor data bus.

External interface

The external interface of the ventilator is an important design task from the standpoint of Electromagnetic compatibility (EMC). It is important to protect the ventilator from conducted and radiated Electromagnetic Interference (EMI) and from Electrostatic Discharge (ESD). In addition, EMI design precautions are taken to control the emission of EMI via cabling and access ports.

Communication interface (RS232C)

There are two RS232C interfaces. Each channel is configured for full-duplex asynchronous operation at communication rates up to 19.2k baud. The isolated interfaces help eliminate the possibility of ground loops. The RS-232 inputs and outputs completely conform to all EIA RS-232C and CCITT V28 specifications.

2.6.5 Enhanced Sensor Interface Board (ESIB)

The Enhanced Sensor Interface Board (ESIB) is the link between the flow transducers, the patient airway pressure transducer, the manifold pressure transducer, the oxygen sensor, the Drive Pressure Limit switch, and the ventilator CPU board.

The ESIB also passes through various switch positions to the ventilator CPU Board. It provides an interface for the ACGO switch, the Bag/Vent switch, the canister release switch, control panel cover switch (ABS On/Off in the Aespire 7900), CO_2 bypass switch (wired On in the Aespire 7900), and breathing circuit ID switches (in the Aespire 7900 the circuit ID "switches" are wired to a special configuration so that software knows it is an ABS circle system). All of the switch signals are filtered for EMI immunity and protected against ESD.

Respiratory gas flow, to and from the patient, is monitored by measuring the differential pressure across a variable orifice in each flow sensor. The pressure transducers for measuring the differential pressure are on the ESIB. The patient airway pressure and the pressure in the ventilator manifold are measured by pressure transducers on the ESIB. Conditioning circuitry is supplied for these transducers and for the Oxygen sensor used in the breathing circuit.

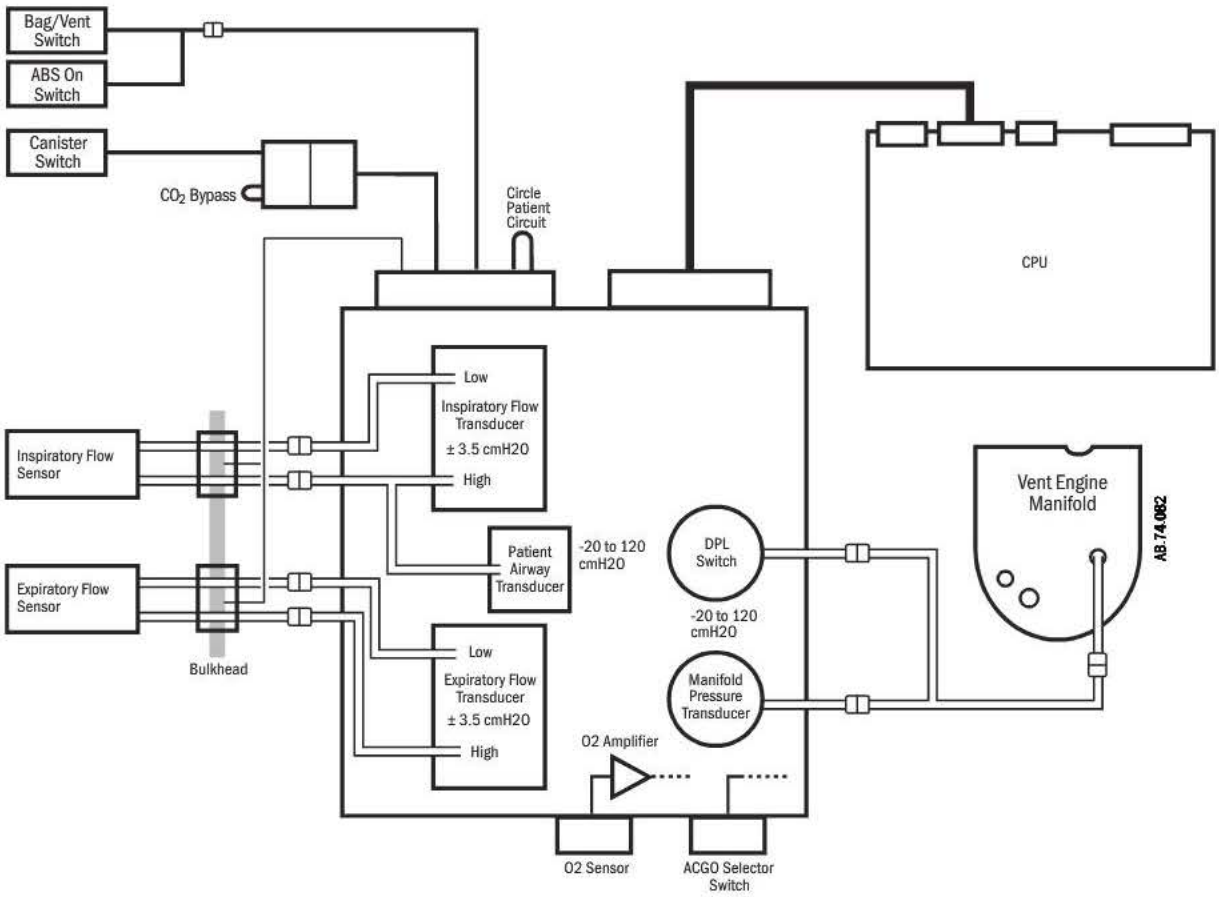

Figure 2-20 ▪ Enhanced Sensor Interface Board (ESIB) functional diagram

Functional description

Power Supply Regulators

The ESIB power supply is a 10 VA limited +12 volt supply originating at the CPU board. It is filtered as it comes onto the ESIB board.

There are three regulators on the ESIB that are supplied by the +12 volt supply. The first regulator is a LP2951 low dropout regulator that produces digital +5 volts. This supply is used to power the flow sensor EEPROMs. Setting the E2_PWR signal to logic low will shut down the +5 volt power supply to the EEPROMs.

The second regulator produces analog +5 volts with another LP2951. This supply is used to power all of the operational amplifiers and pressure transducers.

The third regulator produces analog +6.0 volts with another LP2951. This regulator powers an ADM660 switched capacitor inverter to generate analog –6.0 volts. These supplies power all of the instrumentation amplifiers.

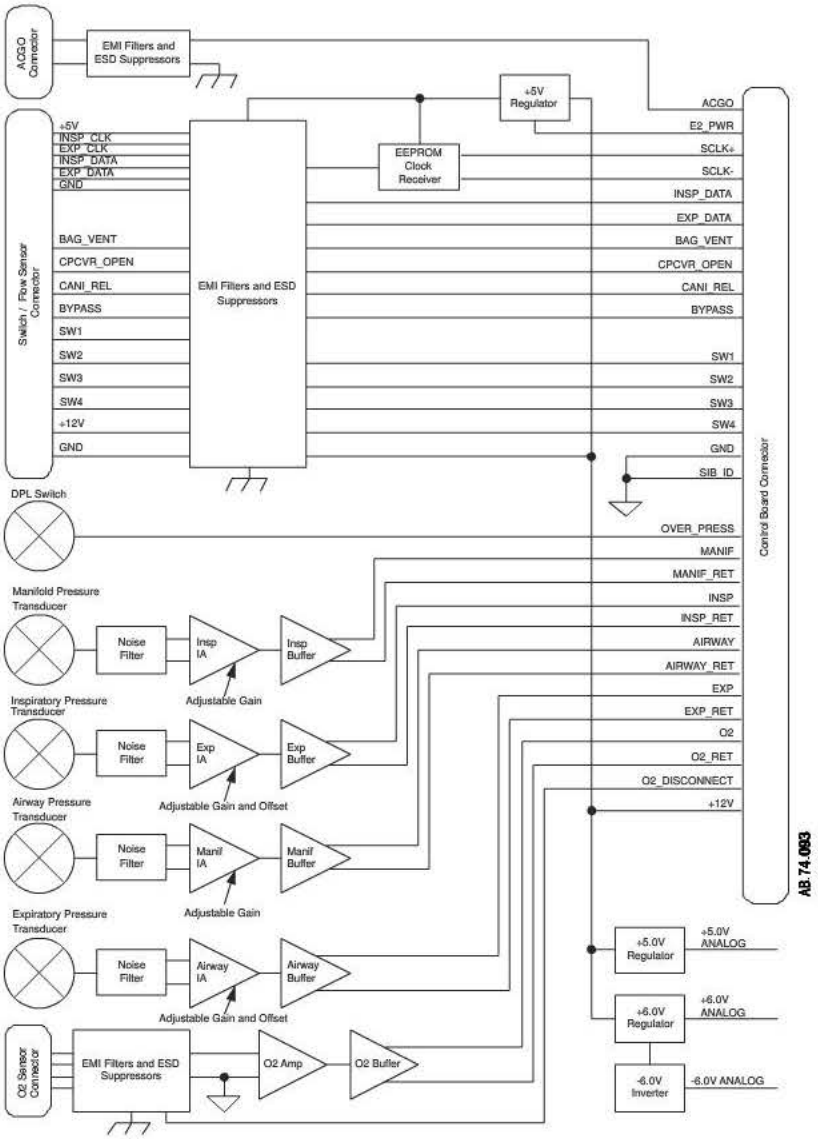

Figure 2-21 ▪ Enhanced Sensor Interface Board (ESIB) block diagram

Oxygen Sensor Interface

The Oxygen sensor connects to the ESIB via a 6 position / 4 pin modular phone jack. The sensor generates a linear output voltage that depends upon the O_2 concentration being measured. The oxygen sensor produces an output of 3 to 15 mV DC in air (21% O_2). It produces an output of 14 to 72 mV DC in 100% oxygen concentration.

The oxygen sensor amplifier provides a gain of 35 and filtering to condition the raw cell output to make it compatible with the ventilator ADC. The total error of the measurement system, including the ADC, is less than ±1%. This is necessary because ISO7767 requires the oxygen analyzer be accurate to ±3% at a constant temperature. The oxygen cell uses ±2% of the accuracy specification, not including thermal drift.

An O2_DISCONNECT signal is provided and is used by the ventilator software to determine that a cell is connected to the cable. The signal is implemented using the disconnect loop-back provided by the oxygen cell. Digital ground is provided to the cell on pin 2 of the connector and the cell loops ground back on pin 4 of the connector. The SIB passes this signal along to the ventilator CPU Board. The O2_DISCONNECT signal is filtered for protection against EMI and clamped for ESD protection.

Flow Sensor Communications Interface

The SIB provides the interface to the flow sensor EEPROMs. Each flow sensor incorporates an EEPROM that contains calibration data to be used by the ventilator software to correct for the linearity error of the flow sensor. This data relates an ADC reading to a flow value. The flow value, integrated over time, allows the system to calculate volume. The SIB also provides +5 volt power at up to 10mA to the flow sensor EEPROMs. The +5 volt power supply incorporates a shutdown control to allow the CPU Board to power down the flow sensor EEPROMs when not communicating with them. A MAX488 receives a differential clock signal from the CPU Board and converts it to a single ended clock to the flow sensor EEPROMs. The power and communication signals to the flow sensors are filtered for EMI protection and clamped to protect against ESD.

Inspiratory and Expiratory Flow Measurement

Differential pressure levels in the range of -3.5 cm H_2O to +3.5 cm H_2O are applied to the differential pressure transducers by the flow of gasses past the variable orifice in the flow sensor. The range of ±3.5 cm H_2O corresponds to ±120 LPM of flow through the variable orifice flow sensors. The output range of the transducer is 0.3 to 3.8 VDC with a zero pressure output of 2.05 VDC.

The pressure transducer is powered by a 4.096 VDC voltage reference and is amplified by an instrumentation amplifier with a nominal gain of 370. The instrumentation amplifier gain is adjustable over a range of 248 to 495 to accommodate variations in pressure transducer span. The instrumentation amplifier also provides an offset adjustment that is used to set the zero pressure output to 2.05 VDC nominal. The offset reference is adjustable over a range of 1.614 to 2.495 VDC to accommodate variation in the pressure transducer zero offset. A RC lag filter, on the output of the pressure transducer amplifier, slows the response of the pressure transducers to make the Enhanced SIB backwards compatible with previous versions of the SIB. A buffer amplifier follows the lag filter to provide a low impedance driver for the cable going to the CPU Board.

Manifold and Patient Airway Pressure Measurement

The precision 4.096 volt reference is used to supply a reference voltage to the instrumentation amplifier's reference pin and to supply input power to the pressure transducer. The output voltage of the pressure transducer changes proportionally to the applied pressure. The instrumentation amplifier has a nominal gain of 286. The instrumentation amplifier gain is adjustable over a range of 199 to 330 to accommodate variations in pressure transducer span. It's nominal zero pressure output voltage is 800mV which is the voltage applied to its reference pin. The pressure range is –20 cm H_2O to 120 cm H_2O. At –20 cm H_2O the amplifiers output voltage is nominally 300mV and at 120 cm H_2O its output is nominally 3800mV. The amplifier nominally changes 25mV for every 1 cm H_2O. The instrumentation amplifier output is low pass filtered and buffered before being sent to the CPU Board.

Over Pressure Signal

The DPL (drive pressure limit) switch is a pneumatic switch and is used to monitor the airway pressure. (In the Aespire 7900, the DPL switch monitors the Vent Engine manifold pressure to limit patient airway pressure.) It is designed to trip if the airway pressure reaches 104 cm H_2O nominal. The OVER_PRESS signal is monitored by the system software and will disable mechanical ventilation, disable the flow valve drive circuit, and close the gas inlet valve in the event of an over-pressure condition.

2.7 Ventilator mechanical subsystems

Refer to Figure 11-1, "*System connection block diagram*" in Section11, for the complete pneumatic/mechanical subsystem diagram.

The mechanical subsystems for the ventilator include:

Pneumatic Vent Engine

- Drive gas inlet filter
- Gas inlet valve
- Supply gas pressure regulator
- Flow control valve
- Drive gas check valve
- Mechanical Overpressure Valve (MOPV)
- Bleed resistor
- Free breathing valve

Exhalation valve

Bellows assembly

Breathing circuit flow sensors

2.7.1 Drive gas filter and Gas Inlet Valve

Drive gas (can be selected from O_2 or Air) enters the Vent Engine (**1**) at a pressure of 241 to 690 kPa (35 to 100 psi) through a 2-micron filter (**2**) that is located under the Gas Inlet Valve (**3**).

During normal operation the Gas Inlet Valve (GIV) is open to let supply gas flow. The GIV provides a shutoff of the supply gas when the ventilator is not in use. The GIV also shuts off supply gas to the ventilator under failure conditions detected by the CPU or over-pressure switch. The output from the GIV stays at the filtered supply gas pressure.

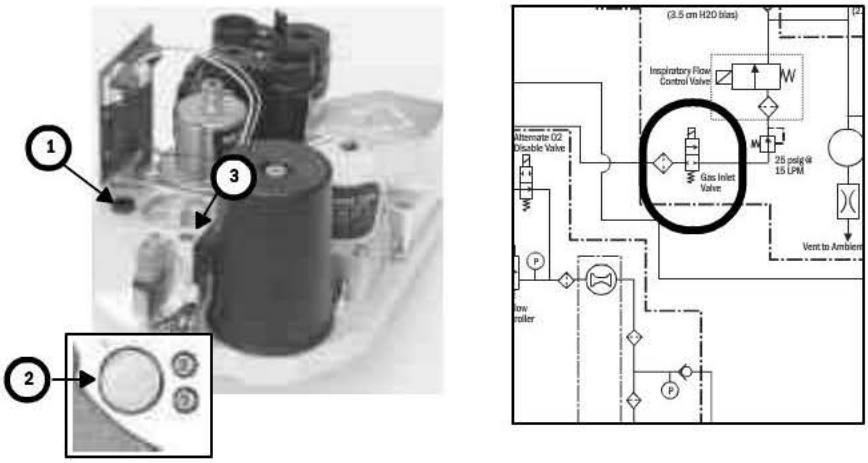

Figure 2-22 • Inlet filter and Gas Inlet Valve (GIV)

2.7.2 Pressure regulator

The pressure regulator (**4**) is a non-relieving pressure regulator that regulates high pressure filtered supply gas down to 172 kPa (25 psi).

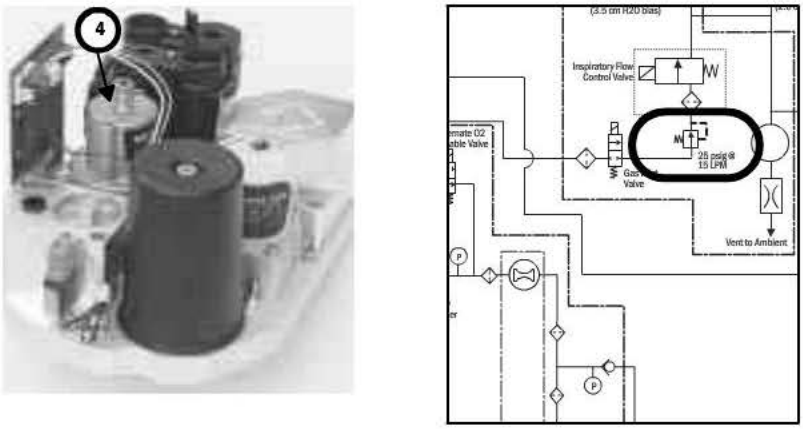

Figure 2-23 • Pressure regulator

2.7.3 Flow control valve

The flow control valve (**5**) is controlled by the CPU. Signals are sent to the flow control valve of the necessary flow determined by ventilator settings and sensor signals. The flow control valve modulates the incoming 172 kPa (25 psi) drive gases to an output from 0 to 120 liters per minute at pressures ranging from 0 to 100 cm H_2O.

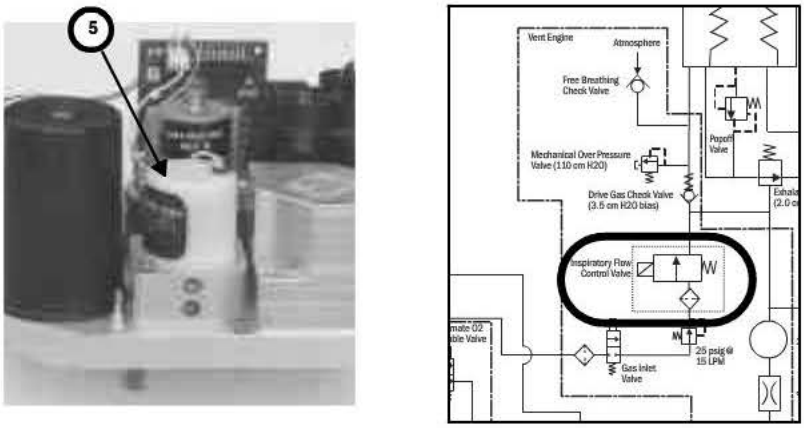

Figure 2-24 • Flow control valve

2.7.4 Drive Gas Check Valve (DGCV)

The Drive Gas Check Valve (**6**) is used downstream of the flow control valve to create the pilot pressure for closing the exhalation valve during inspiratory phases, The DGCV valve is biased shut by an integral weight that supplies approximately 3.5 cm H_2O of bias pressure before permitting flow downstream to the breathing circuit. When the ventilator is exhausting flow from the breathing circuit, the DGCV permits the exhalation valve pilot pressure to be de-coupled from the circuit pressure. This permits the exhalation valve to open and lets gas flow to the exhaust and the gas scavenging system.

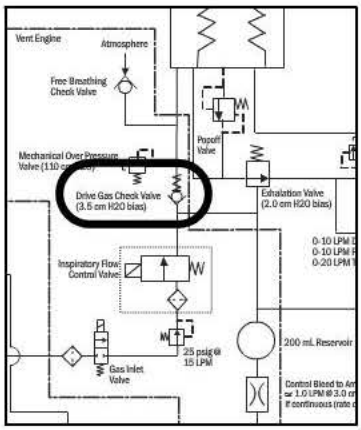

Figure 2-25 • Drive Gas Check Valve

2.7.5 Bellows Pressure Relief Valve

The Bellows assembly is the interface between drive gas and patient gas in the breathing system. The pressure relief valve (or pop-off valve) in the bellows assembly (**7**) controls the pressure in the breathing circuit and exhausts excess patient gas through the exhalation valve.

The pressure relief valve is normally closed, maintaining approximately 1.5 cm H_2O in the breathing circuit in a no-flow condition, enough to keep the bellows inflated. It is piloted closed during inspiration and remains closed until the bellows is refilled during exhalation. It will exhaust ≤ 4 L/min excess fresh gas flow at ≤ 4 cm H_2O.

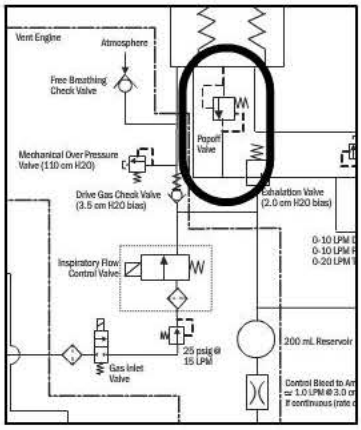

Figure 2-26 • Bellows pressure relief valve

2.7.6 Exhalation valve

The exhalation valve contains an elastomeric diaphragm that is used along with the flow valve to control the pressures in the breathing circuit. The exhalation valve includes two male ports on the bottom for:

- Bellows drive gas (**8**)
- Exhalation valve pilot (**9**) - (manifold pressure)

The exhalation valve includes three ports on top that connect to the bellows base manifold:

- Drive gas pass through (**10**)
- Drive gas return and pop-off valve flow (**11**)
- APL exhaust flow to scavenging (**12**)

A port at the back of the exhalation valve (**13**) connects to the down tube that directs all the exhaust flows to the scavenging receiver.

The exhalation valve is normally open. Approximately 2 cm H_2O of pilot pressure is necessary to close the valve. When the exhalation port is open, gas flows from the bellows housing to the scavenging port.

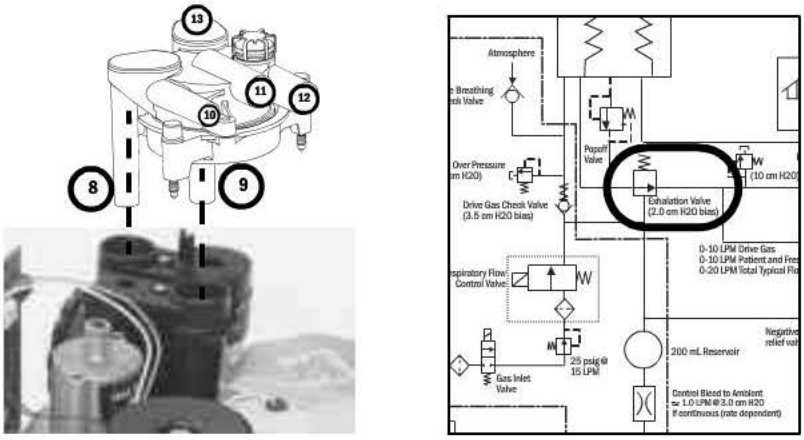

Figure 2-27 • Exhalation valve

2.7.7 Mechanical Overpressure Valve

The Mechanical Overpressure Valve (MOPV) is a mechanical valve (**14**) that operates regardless of electrical power. It functions as a third level of redundancy to the ventilator's pressure limit control functions, supplying pressure relief at approximately 110 cm H_2O.

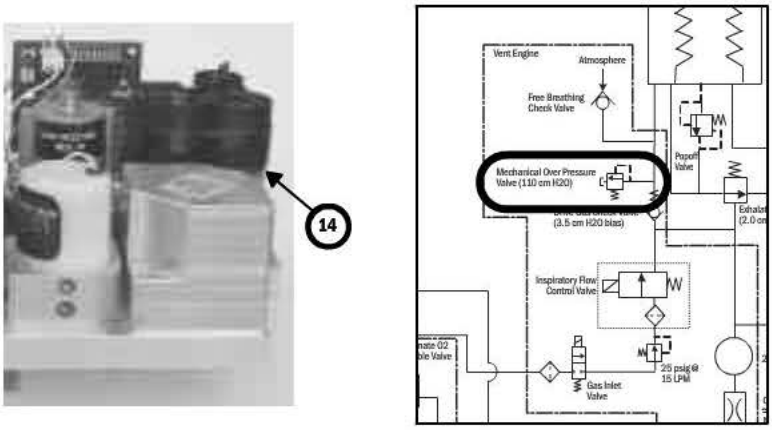

Figure 2-28 • Mechanical overpressure valve

2.7.8 Reservoir and bleed resistor

The reservoir (**15**) is a 200 ml chamber that dampens the manifold (pilot) pressure pulses to the exhalation valve.

The bleed resistor (**16**) is a "controlled leak" from 0 to 12 l/min in response to circuit pressures from 0 to 100 cm H_2O. The small quantity of pneumatic flow exhausting through the bleed resistor permits control of the exhalation valve's pilot pressure by modulation of the valve output. The bleed resistor exhausts only clean drive gas and must not be connected to a waste gas scavenging circuit. The output is routed away from the electrical components to make sure that systems using oxygen drive gas meet the 10VA limitation requirement for oxygen enrichment.

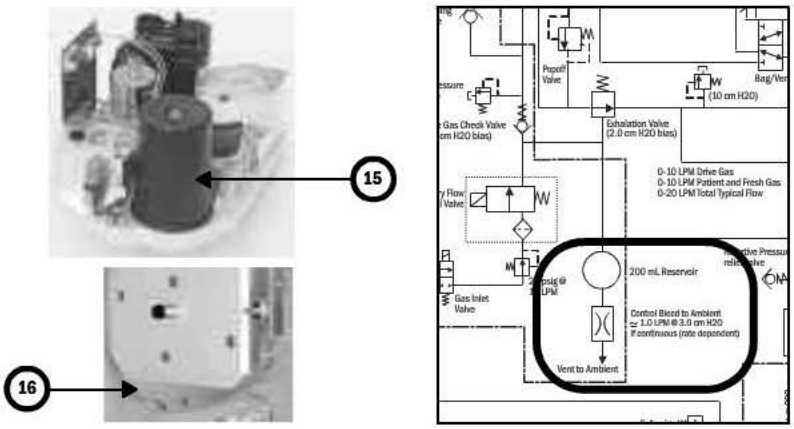

Figure 2-29 • Reservoir and bleed resistor

2.7.9 Free breathing valve

The free breathing valve (**17**) helps assure the patient can spontaneously breathe. The ventilator is programmed to supply a specified number of breaths per minute to the patient. If, in between one of these programmed cycles, the patient needs a breath (spontaneous), the free breathing valve permits the patient to inhale. The free breathing valve is closed on mechanical inspiration.

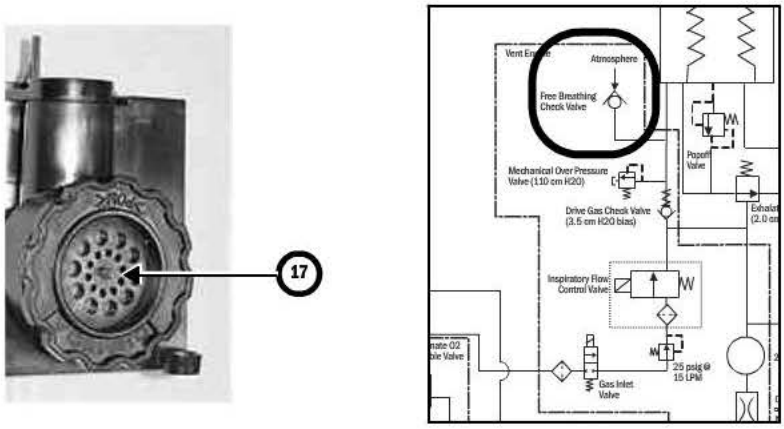

Figure 2-30 ▪ Free breathing valve

2.7.10 Breathing circuit flow sensors

Two flow sensors are used to monitor inspiratory and expiratory gas flow. The inspiratory flow sensor is downstream of the gas system inspiratory check valve. Feedback from the inspiratory transducer is used to supply tidal volumes that make allowances for the effects of fresh gas flow and circuit compressibility. The expiratory flow sensor is located at the input to the gas system expiratory check valve. Feedback from the expiratory flow sensor is used to supply signals for expiratory tidal volume monitoring and the breath rate.

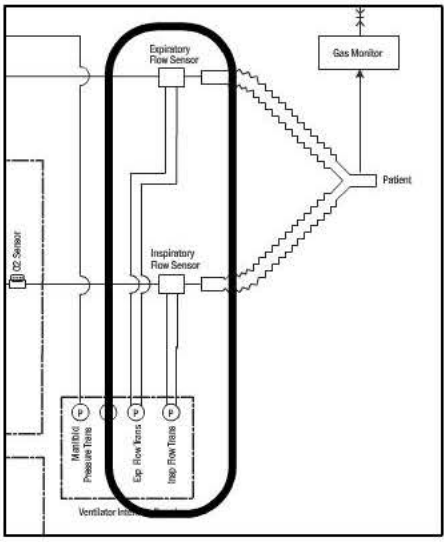

Figure 2-31 ▪ Flow sensors

3 Checkout Procedure

In this section

3.1 Ventilator post-service checkout 3-2
3.2 Inspect the system 3-2
3.3 Pipeline and cylinder tests 3-3
3.4 Flow control tests 3-4
3.5 Pressure relief test 3-6
3.6 O_2 supply alarm test 3-6
3.7 Flush flow test 3-7
3.8 Vaporizer back pressure test 3-8
3.9 Low-pressure leak test 3-9
3.9.1 Negative low-pressure leak test 3-9
3.9.2 ISO or BSI standard low-pressure leak test 3-10
3.10 Alarm tests 3-12
3.11 Breathing system tests 3-14
3.12 Auxiliary O2 flowmeter tests 3-16
3.13 Integrated Suction Regulator tests 3-16
3.14 Power failure test 3-17
3.15 Electrical safety tests 3-17

⚠ WARNINGS After any repair or service of the Aespire system, complete all tests in this section.

Before you do the tests in this section:

- Complete all necessary calibrations and subassembly tests. Refer to the individual procedures for a list of necessary calibrations.
- Completely reassemble the system.

If a test failure occurs, make appropriate repairs and test for correct operation.

3.1 Ventilator post-service checkout

After servicing the Aestiva 7900 Ventilator, run the service menu tests that are pertinent to the components replaced. Perform calibration on flow sensors, pressure sensitivity, flow valve and bleed resistor.

Then, complete the checkout procedure for the entire machine in the following sections.

3.2 Inspect the system

⚠ **CAUTION** The upper shelf weight limit is 34 kg (75 lb).

⚠ **WARNING** Do not leave gas cylinder valves open if the pipeline supply is in use. Cylinder supplies could be depleted, leaving an insufficient reserve supply in case of pipeline failure.

Before testing the system, ensure that:

- The equipment is not damaged.
- Components are correctly attached.
- The breathing circuit is correctly connected, not damaged.
- Pipeline gas supplies are connected.
- Cylinder valves are closed.
- Models with cylinder supplies have a cylinder wrench attached to the system.
- Models with cylinder supplies have a reserve supply of O_2 connected to the machine during system checkout.
- The casters are not loose and the brakes are set and prevent movement.
- The power cord is connected to a wall outlet. The mains indicator comes on when AC Power is connected.

3.3 Pipeline and cylinder tests

⚠ **CAUTION** To prevent damage:

- Open the cylinder valves slowly.
- Do not force the flow controls.

If your system does not use cylinder supplies, do not do steps 2 and 3.

1. Disconnect the pipeline supplies and close all cylinder valves (if equipped). If the pipeline and the cylinder pressure gauges are not at zero, bleed all gasses from the system.
   a. Connect an O_2 supply.
   b. Set the system switch to On.
   c. Set the flow controls to mid range.
   d. Make sure that all gauges but O_2 are at zero.
   e. Disconnect the O_2 supply.
   f. Make sure that the O_2 gauge goes to zero. As pressure decreases, alarms for low O_2 supply pressure should occur.
2. Make sure that the cylinders are full:
   a. Open each cylinder valve.
   b. Make sure that each cylinder has sufficient pressure. If not, close the applicable cylinder valve and install a full cylinder.
3. Test one cylinder at a time for high pressure leaks:
   a. Set the system switch to Standby, which stops the O_2 flow.
   b. If equipped, turn the auxiliary O_2 flow control fully clockwise (no flow).
   c. If equipped, turn off venturi derived suction.
   d. Open the cylinder.
   e. Record the cylinder pressure.
   f. Close the cylinder valve.
   g. Record the cylinder pressure after one minute. If the pressure decreases more than **690 kPa (100 psig)**, there is a leak.
      Install a new cylinder gasket and do this step again.
   h. Repeat step 3 for all cylinders.

⚠ **WARNING** Do not leave gas cylinder valves open if the pipeline supply is in use. Cylinder supplies could be depleted, leaving an insufficient reserve supply in case of pipeline failure.

4. Connect the pipeline supplies one at a time and ensure that the corresponding gauge indicates pipeline pressure.

3.4 Flow control tests

⚠ WARNING Nitrous oxide (N_2O) flows through the system during this test. Use a safe and approved procedure to collect and remove it.

1. Set up the gas scavenging system.
   a. Connect the AGSS to a gas scavenging system.
   b. Attach a patient circuit and plug the patient port.
   c. Attach a bag to the bag port (or plug the bag port).
   d. Set the Bag/Vent switch to Bag.
   e. Adjust the APL valve to minimum.
2. Connect the pipeline supplies or slowly open the cylinder valves.
3. Turn all flow controls fully clockwise (minimum flow).
4. Set the ACGO selector switch to ABS.
5. Turn on the system.
6. Confirm that the O_2 sensor measures 21% in room air and 100% in pure O_2. If not, calibrate the O_2 sensor.
7. Make sure that:
   - For a dual-tube O_2 flowmeter, the O_2 flowtube shows 0.025 to 0.075 L/min.
   - For a single-tube O_2 flowmeter, the O_2 flowtube shows 0.175 to 0.225 L/min.
   - The other flowtubes show no gas flow.
8. Set the flow controls to mid range of each flowtube and make sure that the flowtube floats rotate and move smoothly.

Note If the system does not include N_2O, skip steps 9 and 10.

9. Check the Link proportioning system concentration (increasing N_2O flow). Observe the following precautions:
   a. Start with all valves at the minimum setting.
   b. Adjust only the N_2O flow control.
   c. Increase the N_2O flow as specified in the following table and make sure the O_2 concentration is in range.

Note: Allow the O_2 monitor to stabilize. At the lower flows, the O_2 monitor may take up to 90 seconds to stabilize.

d. If you overshoot a setting, turn the O_2 flow control clockwise until the N_2O flow decreases to the previous setting before continuing the test.

Set the N_2O flow (L/min)	Measured O_2
0.15 (dual flowtubes only)	21% minimum
0.5 (dual flowtubes only)	21% minimum
0.8	21% to 30%
1.0	21% to 30%
2.0	21% to 30%
6.0	21% to 30%
9.0	21% to 30%

10. Check the proportioning system concentration (decreasing O_2 flow). Observe the following precautions:

a. Start with N_2O valve at the maximum setting.

b. Adjust only the O_2 flow control.

c. Decrease the O_2 flow as specified in the table and make sure the O_2 concentration is in the allowed range.

Note: Allow the O_2 monitor to stabilize. At the lower flows, the O_2 monitor may take up to 90 seconds to stabilize.

d. If you overshoot a setting, turn the N_2O flow control counterclockwise until the O_2 flow increases to the previous setting before continuing the test.

Set the O_2 flow (L/min)	Measured O_2
3.0	21% to 30%
2.0	21% to 30%
1.0	21% to 30%
0.3	21% to 30%

11. Check the linearity of the Air flow control.

- Turn the N_2O flow control fully clockwise to minimum stop.

Set the O_2 flow (L/min)	Set the Air flow (L/min)	O_2 monitor range
4.0	3.0	61% to 71%
3.5	6.0	45% to 55%
1.5	8.0	28% to 38%

3.5 Pressure relief test

To check the pressure relief valve (vaporizer manifold outlet).

1. Turn all flow controls fully clockwise (minimum flow).
2. Set the ACGO selector switch to ACGO.
3. Connect a gauge or a digital manometer to the ACGO outlet using the positive pressure leak test adapter.
4. Adjust the O_2 flow to 0.5 L/min.
5. Verify that the test device reading stabilizes within the following range:
   31–60 kPa, **230–450 mm Hg**, **4.5–8.5 psi**.
6. Remove the test device and the adapter.

Test Adapter

3.6 O_2 supply alarm test

1. Set all flow controls to 3 L/min.
2. Stop the O_2 supply. (Disconnect the pipeline supply or close the cylinder valve.)
3. Make sure that:
   a. The low O_2 supply alarm occurs.
   b. The N_2O (if equipped) and O_2 flows stop. The O_2 flow stops last.
   c. Air (if equipped) flow continues.
   d. Gas supply alarms occur on the ventilator if the ventilator uses O_2 as the drive gas.
4. Turn all of the flow controls fully clockwise (minimum flow).
5. Reconnect the pipeline supplies.

3.7 Flush flow test

1. Set the Bag/Vent switch to Vent.
2. Set the system switch to Standby.
3. Attach a patient circuit and plug the patient port.
4. Set the ACGO selector switch to ABS.
5. Ensure that the bellows is completely collapsed.
6. Measure the amount of time it takes to fill the bellows when the O_2 Flush button is fully and continuously depressed.
7. Repeat the above measurement two more times (deflate bellows by removing the plug from the patient port).
   - The bellows should fill in 1.8 to 2.3 seconds.

Possible Causes of Failure

- Large leak (if long filling time).
- ACGO selector valve inlet cross-connection (if short filling time).

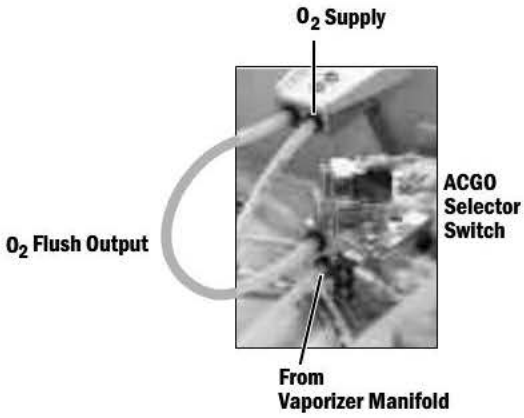

3.8 Vaporizer back pressure test

⚠ **WARNING** Anesthetic agent vapor comes out of the common gas outlet during this test. Use a safe, approved procedure to remove and collect the agent.

1. Set up the gas scavenging system.
   a. Connect the AGSS to a gas scavenging system.
   b. Attach a patient circuit and plug the patient port.
   c. Attach a bag to the bag port (or plug the bag port).
   d. Set the Bag/Vent switch to Bag.
   e. Adjust the APL valve to minimum.
2. Set the ACGO selector switch to ABS.
3. Set the system switch to On.
4. Set the O_2 flow to 6 L/min.
5. Make sure that the O_2 flow stays constant and the float moves freely.
6. Adjust the vaporizer concentration from 0 to 1% one click at a time. The O_2 flow must not decrease more than 1 L/min through the full range. If the O_2 flow decreases more than 1 L/min:
   a. Install a different vaporizer and try this step again.
   b. If the O_2 flow decreases less than 1 L/min with a different vaporizer, the malfunction is in the first vaporizer.
   c. If the O_2 flow also decreases more than 1 L/min with a different vaporizer, the malfunction is in the Aespire system. Do not use the system until it is serviced (repair vaporizer manifold port valve).
7. Complete steps 3 through 5 for each vaporizer and vaporizer position.
8. Set the system switch to Standby.

3.9 Low-pressure leak test

Note Perform either the "Negative low-pressure leak test" or the "ISO or BSI standard low-pressure leak test." It is not necessary to perform both tests.

⚠ WARNING Do not use a system with a low-pressure leak. Anesthetic gas will go into the atmosphere, not into the breathing circuit.

3.9.1 Negative low-pressure leak test

1. Test the leak test device:
   a. Put your hand on the inlet of the leak test device. Push hard for a good seal.
   b. Squeeze the bulb to remove all air from the bulb.
   c. If the bulb completely inflates in less than 60 seconds, replace the leak test device.
2. Set the system switch to Standby.
3. Set the ACGO selector switch to ACGO.
4. Turn off all vaporizers.
5. Test the anesthesia machine for low-pressure leaks:
   a. Open the flow controls one and a half turns counterclockwise.
   b. Connect the test device to the ACGO outlet.
   c. Compress and release the bulb until it is empty.
   d. The vacuum causes the floats to move. This is usual. If the bulb completely inflates in 30 seconds or less, there is a leak in the low-pressure circuit.
6. Test each vaporizer for low-pressure leaks:
   a. Set the vaporizer to 1%.
   b. Repeat step 5.
   c. Set the vaporizer to OFF.
   d. Test the remaining vaporizers.
7. Disconnect the test device.
8. Turn all flow controls fully clockwise (minimum flow). Do not over tighten.

⚠ WARNING Agent mixtures from the low-pressure leak test stay in the system. Always flush the system with O_2 after the low-pressure leak test (1 L/min for one minute).

Turn off all vaporizers at the end of the low-pressure leak test.

9. Flush the system with O_2:
   a. Set the system switch to On.
   b. Set the O_2 flow to 1 L/min.
   c. Continue the O_2 flow for one minute.
   d. Turn the O_2 flow control fully clockwise (minimum flow).
   e. Set the system switch to Standby.

3.9.2 ISO or BSI standard low-pressure leak test

⚠ CAUTION Do the positive pressure leak test at the ACGO outlet only.

1. Set the ACGO selector switch to ACGO.
2. Turn all flow controls fully clockwise (minimum flow).
3. Using the positive pressure leak test adapter, connect the ISO or BSI specific leak test device to the ACGO outlet. Push the adapter into the ACGO outlet throughout the test to get a good seal.

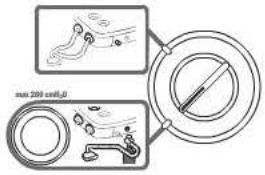

Leak Test Adapter

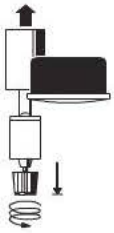

Test Device (Top View)

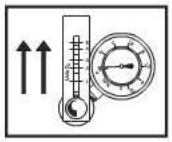

Test Device (Front View)

4. Keep flowmeter of the test device vertical for accurate results.
5. Fully open the needle valve on the test device (counterclockwise).

⚠ CAUTION If the needle valve is not fully open, this test can damage the pressure gauge on the test device.

6. Set the system switch to On.

7. Open the O_2 flow control and set a total flow of 0.4 L/min through the flowmeter on the test device.
8. Make sure that the pressure gauge on the test device reads zero and that all other flow controls are fully closed.
9. Close the needle valve on the test device until the test gauge reads:

ISO 5358	**3 kPa**
BSI 4272.3	**20 kPa**

10. If the flow through the test device is less than
    0.35 L/min (ISO) or
    0.3 L/min (BSI),
    there is a low pressure leak in the anesthesia machine.
11. Fully open the needle valve on the test device to decrease the back pressure.
12. Test each vaporizer for low-pressure leaks:
    a. Set the vaporizer to 1%.
    b. Repeat steps 7 through 10.
    c. Turn the vaporizer OFF.
    d. Test the remaining vaporizers.
13. Remove test tool and adapter.

⚠ WARNING Agent mixtures from the low-pressure leak test stay in the system. Always flush the system with O_2 after the low-pressure leak test (1 L/min for one minute).

Turn all vaporizers OFF at the end of the low-pressure leak test.

14. Flush the system with O_2:
    a. Set the system switch to On.
    b. Set the O_2 flow to 1 L/min.
    c. Continue the O_2 flow for one minute.
    d. Turn the O_2 flow control fully clockwise (minimum flow).
    e. Set the system switch to Standby.

3.10 Alarm tests

1. Connect a test lung to the patient connection.
2. Set the Bag/Vent switch to Vent.
3. Set the system switch to On.
4. Set the controls:
   - Ventilation Mode: Volume control (select from main menu)
   - Ventilator:
     - Tidal Vol: 400 ml
     - Rate: 12
     - I:E Ratio:1:2
     - Plimit:40 cm H_2O
     - PEEP: OFF
   - Anesthesia Machine:
     - O_2 flow: minimum flow
     - All other gases: OFF
     - ACGO selector switch to ABS
5. Push O_2 Flush to fill the bellows.
6. Set the Bag/Vent switch to Bag and back to Vent.
7. Make sure that:
   a. Mechanical ventilation starts.
   b. A subatmospheric pressure alarm does not occur.

      Note: With active gas scavenging, too much scavenging flow can cause subatmospheric alarm.
   c. The ventilator displays the correct data.
   d. The bellows inflate and deflate during mechanical ventilation.
8. Set the O_2 flow control to 5 L/min.
9. Make sure that:
   a. The end expiratory pressure is approximately 0 cm H_2O.

      Note: Positive end expiratory pressure when PEEP is off may indicate that the scavenging system is not removing enough gas.
   b. The ventilator displays the correct data.
   c. The bellows inflate and deflate during mechanical ventilation.
10. Test the low minute volume alarm:
    a. Go to the alarms menu.
    b. Set the alarm limit for low minute volume to 6.0 L/min.
    c. Make sure that a low minute volume alarm occurs.
    d. Go to the alarms menu.
    e. Set the low minute volume alarm to OFF.

11. Test the high airway pressure alarm:
    a. Set P_{limit} to less than the peak airway pressure.
    b. Make sure that the high airway pressure alarm occurs.
    c. Set P_{limit} to correct level.
12. Test the apnea and low airway pressure alarms:
    a. Turn all flow controls fully clockwise.
    b. Remove the test lung from the patient connection.
    c. Other alarms such as low minute volume can occur.
    d. Make sure that the low airway pressure and apnea alarms occur. The apnea alarm occurs after 30 seconds.
13. Test the sustained airway pressure alarm:
    a. Set the controls:
        - APL valve – Closed (70)
        - Bag/Vent switch – Bag
    b. Mechanical ventilation stops when the Bag/Vent switch is set to Bag.
    c. Occlude the bag port connector with a test plug.
    d. Close the patient connection using the test plug located on the side of the ABS and push the O_2 Flush button.
    e. Make sure that the sustained pressure alarm occurs after approximately 15 seconds at the sustained pressure limit (6-30 cm H_2O varies with pressure limit).
14. Test the O_2 monitor and alarms:
    a. Remove the O_2 sensor from the circuit module.
    b. Make sure the sensor measures approximately 21% O_2 in room air.
    c. Set the low O_2 alarm to 50%. Make sure a low O_2 alarm occurs.
    d. Set the low O_2 alarm back to 21% and make sure that alarm cancels.
    e. Put the O_2 sensor back in the circuit.
    f. Remove the test lung from the patient connection.
    g. Set the High O_2 alarm to 50%.
    h. Push the flush button to fill the breathing system.
    i. Set the O_2 flow control to 2 L/min.
    j. Make sure the high O_2 alarm comes On.
    k. Set the high O_2 alarm back to 100% and make sure that alarm cancels.
    l. After 2 minutes in pure O_2, the O_2 display reads approximately 100%.
    m. Turn the O_2 flow control fully clockwise (minimum flow).
15. Set the system switch to Standby.

3.11 Breathing system tests

⚠ WARNING Objects in the breathing system can stop gas flow to the patient. This can cause injury or death:

- Do not use a test plug that is small enough to fall into the breathing system.

1. Verify that AGSS is operating. For systems that have a flow indicator on the side, make sure that the flow indicator shows a flow in the green (normal) region.
2. Zero the pressure gauge (Section 5.5.1).

Check Valves

3. Make sure that the check valves on the breathing circuit module work correctly:
   a. The Inspiratory check valve rises during inspiration and falls at the start of expiration.
   b. The Expiratory check valve rises during expiration and falls at the start of inspiration.

Ventilator Bellows

4. Ventilator bellows test:
   a. Set the system switch to Standby.
   b. Set the Bag/Vent switch to Ventilator.
   c. Set all flow controls to minimum.
   d. Close the breathing circuit at the patient connection. Use the test plug located on the side of the ABS.
   e. Push the O_2 flush button to fill the bellows.
   f. The pressure must not increase to more than 15 cm H_2O on the pressure gauge.
   g. If the bellows falls more than 100 mL/min (top of indicator), it has a leak.

Service Mode Tests

5. Enter the Service Mode: Push and hold the adjustment knob on the ventilator's display and set the system switch to On.
   a. Select and confirm "Service Mode".
   b. Select and confirm "Breathing System Leak Test" (Section 4.3.12).
   c. Follow the instructions on the screen.
   d. The leak rate should be less than 200 mL/min.
   For machines with a single-tube O_2 flowmeter, the pressure reading should reach 30 cm H_2O at minimum flows greater than 200 mL/min.

Note: If test fails, see Section 7.2, "Breathing System Leak Test Guide".

Bag Circuit

6. Test the Bag circuit for leaks:
   a. Set the system switch to On.
   b. Set the Bag/Ventilator switch to Bag.
   c. Plug the Bag port (use your hand or the approved test plug).
   d. Close the APL valve (70 cm H_2O).
   e. Set the O_2 flow to 0.25 L/min.
   f. Close the patient connection (using a hand or test plug on the side of the breathing system) and pressurize the bag circuit with the O_2 flush button to approximately 30 cm H_2O.
   g. Release the flush button. The pressure must not decrease. A pressure decrease large enough to see on the gauge indicates an unacceptable leak.

Note: If test fails, see Section 7.2, "Breathing System Leak Test Guide".

APL Valve

7. Test the APL valve:
   a. Fully close the APL valve (70 cm H_2O).
   b. Set the total fresh gas flow to approximately 3 L/min and make sure that the value on the inspiratory pressure gauge does not exceed 85 cm H_2O. Some pressure fluctuation is normal.
   c. Fully open the APL valve (to the MIN position).
   d. Set O_2 flow to 3 L/min. Turn any other gases off.
   e. Make sure that the value on the inspiratory pressure gauge is less than approximately 5 cm H_2O.
   f. Push the O_2 flush button. Make sure that the value on the inspiratory pressure gauge stays less than 10 cm H_2O.
   g. Set the O_2 flow to minimum and make sure that the value on the inspiratory pressure gauge does not decrease below 0 cm H_2O.
8. Remove your hand or the test plug from the patient connection.
9. Set the System switch to Standby.

⚠ WARNING Make sure that there are no test plugs or other objects caught in the breathing system.

3.12 Auxiliary O_2 flowmeter tests

1. Open the O_2 cylinder valve or connect an O_2 pipeline.
2. Rotate the flow control clockwise (decrease) to shut off the flow. The ball should rest at the bottom of the flow tube and not move.
3. Rotate the flow control counterclockwise (increase). The ball should rise immediately after rotation is begun. It should rise smoothly and steadily with continued counterclockwise rotation. When a desired flow is set, the ball should maintain in a steady position.
4. Occlude the auxiliary O_2 outlet. The ball should rest at the bottom of the flow tube and not move. A ball that does not rest at the bottom of the flow tube indicates a leak and requires service.
5. Rotate the flow control clockwise to shut off the flow.

3.13 Integrated Suction Regulator tests

The gauge needle should come to rest within the zero range bracket when no suction is being supplied. Gauges which do not comply may be out of calibration.

1. Adjust the regulator setting to minimum.
2. Turn the mode selector to I (On).
3. Ensure the gauge remains less than 200 mmHg (26 kPa, 0.26 Bar).
4. Occlude the inlet.
5. Ensure the gauge remains less than 200 mmHg (26 kPa, 0.26 Bar).
6. Adjust the regulator in an increasing vacuum level.
7. The gauge should rise after rotation has begun. The gauge should rise with continued rotation of the regulator adjustment.
8. Adjust the regulator setting to minimum.
9. Turn the Mode selector to O (Off).

3.14 Power failure test

1. Connect the power cord to a mains outlet. The mains indicator on the display comes on when AC Power is connected.

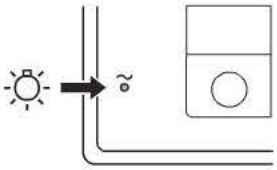

   If the indicator is not on, the display assembly is not receiving AC power.

   - Verify AC power to the machine (reset circuit breaker).
   - Check fuses in display assembly's inlet module.
   - Check fuses in machine's AC inlet assembly.

2. Set the system switch to On.
3. Unplug the power cord with the system turned on.
4. Make sure that the power failure alarm comes on.
5. Make sure the following message is on the ventilator display:
   - "On Battery - Power OK?"
6. Connect the power cable again.
7. Make sure the alarm cancels.

3.15 Electrical safety tests

Make sure the system is completely assembled and all accessory devices are connected to electrical outlets.

1. Connect an approved test device (e.g. UL, CSA, or AAMI) and verify that the leakage current is less than:

Voltage	Max. Leakage Current
120/100 Vac	300 μAmps
220/240 Vac	500 μAmps

2. Make sure that the resistance to ground is less than 0.2Ω between an exposed metal surface and the ground pin on the power cord.

4 Self Tests and Service Mode

⚠ **WARNING** Post-Service Checkout is required after you complete this section. You must perform *Section 3.1 Post-service checkout* after performing any maintenance, service or repair. Failure to do so may result in patient injury.

In this section To ensure proper operation, the Aespire 7900 Ventilator includes several tests that run automatically (self tests) and a series of menu pages that a qualified service person can use to test, calibrate, or troubleshoot ventilator related components in the Aespire machine (Service Mode).

4.1 Self tests 4-3

4.2 Service Mode Confirmation menu 4-4

4.3 Main Menu - Service Mode 4-5

- 4.3.1 Alarm Log 4-6
- 4.3.2 Error Log 4-7
- 4.3.3 System Configuration 4-8
- 4.3.4 User Select Defaults 4-12
- 4.3.5 Test CPU and Memory 4-14
- 4.3.6 Test EEPROM 4-15
- 4.3.7 Test GIV 4-16
- 4.3.8 Test Flow Valve 4-17
- 4.3.9 Test Drive Pressure Limit Switch 4-18
- 4.3.10 Test 5V Fail Alarm 4-19
- 4.3.11 Test Serial Ports 4-20
- 4.3.12 Breathing System Leak Test 4-21
- 4.3.13 Display A/D Channels 4-22
- 4.3.14 Display Discrete I/O Signals 4-24

4.3.15 Display Battery Status 4-25
4.3.16 Test Panel Switches 4-26
4.3.17 Flow Valve Test Tool 4-27
4.3.18 Adjust Drive Gas Regulator 4-28
4.3.19 O2 Calibrations 4-29
4.3.20 Calibrate Flow Sensors 4-30
4.3.21 Pressure Sensitivity 4-31
4.3.22 Calibrate Flow Valve 4-32
4.3.23 Bleed Resistor Calibration 4-33
4.3.24 Service Calibrations Required 4-34

4.1 Self tests

The Aespire 7900 Ventilator software includes self tests that determine whether or not the operating software is functioning properly and whether or not the electronic circuits on the circuit boards are functional.

The self tests include:

- Powerup tests
- Continuous tests
- Periodic tests

Powerup tests

The following is a list of the tests run at powerup:

- Sequential watchdog
- Logical watchdog
- Data RAM walking pattern test
- FLASH ROM CRC verification
- Gas inlet valve test (electrical and pneumatic)
- Calibration of the manifold sensor

If one or more of these tests fail, the display provides a readout of the problem.

The On and Off states of the Gas Inlet Valve (GIV) are tested at power up. The manifold pressure will be tested to determine pass/failure. If the GIV causes the self test to fail on power up, an alarm sound and the message “Gas Inlet Valve Failure” is displayed.

If the calibration of the manifold sensor fails on power up, an alarm sounds and the message “Manifold Pressure Sensor Failure” is shown.

Continuous tests

These tests are run continuously during normal operation and alarms are associated with each test. A failure causes an alarm to display on the screen in the alarm display area.

- Flow valve electrical feedback
- Supply voltage checks
- Battery voltage checks

The flow valve feedback signal is tested in non-mechanical and mechanical ventilation states. The flow valve is closed in non-mechanical ventilation.

Periodic tests

These tests are run every 30 seconds during normal operation. Alarms are associated with each test. A failure causes an alarm to display on the screen in the alarm display area.

- CPU Test
- Display RAM walking pattern test
- Data RAM walking pattern test
- FLASH ROM CRC verification

4.2 Service Mode Confirmation menu

The service calibration mode tests and/or calibrates hardware necessary to prepare a ventilator manufactured for shipment and to service a ventilator in the field.

There are two ways to enter the service mode:

- If the machine is turned off, push and hold in the adjustment knob while setting the system switch to On. Hold the adjustment knob pushed in until the "Service Confirmation" menu appears. Use the adjustment knob to highlight "Service Mode", then push the adjustment knob to confirm the selection.

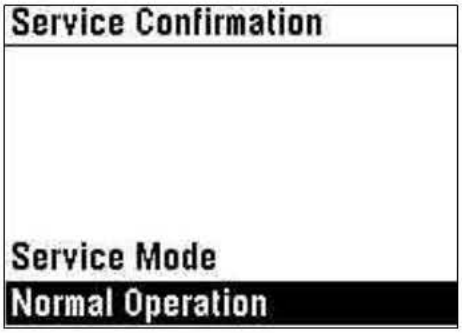

- If the machine is already in normal operation, set the Bag/Vent switch to Bag and press the End Case key (push the adjustment knob to confirm).
- Then, press the V_T/Pinsp, the PEEP, and the Menu switches at the same time to reset the software (powerup). As the system restarts, push and hold the adjustment knob until the "Service Mode Confirmation" menu appears.

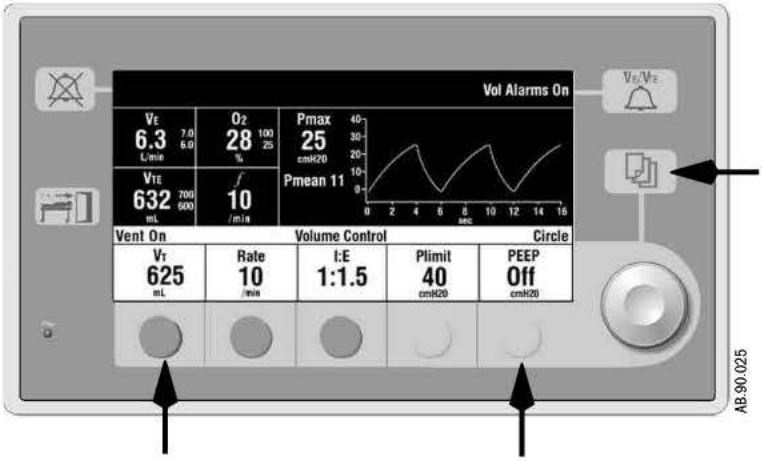

4.3 Main Menu - Service Mode

The service mode is entered from the service confirmation menu. Select "Service Mode" and push the adjustment knob. The Service Mode main menu allows navigation to the individual menus for alarm or error logs, calibrations, system configurations, diagnostic tests and tools, and user selected defaults.

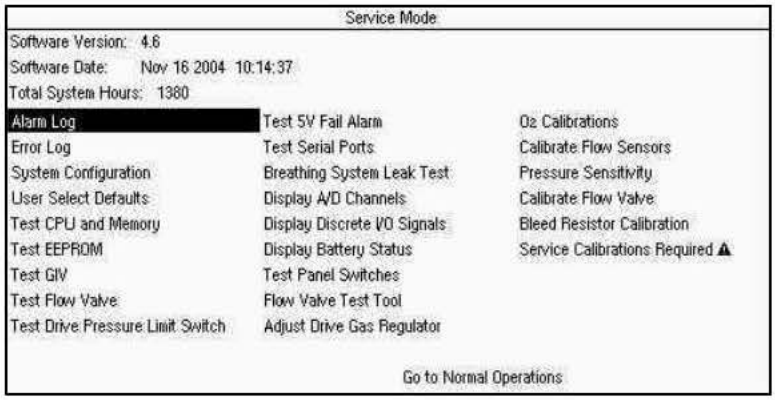

Figure 4-1 • Service Mode main menu

Any menu can be selected by pressing the control knob. The software version, software date, and total system hours at the top of the Service Mode main menu are not selectable.

Go to Normal Operations Provides the means to exit the service mode via a hardware reset.

4.3.1 Alarm Log

The Alarm Log displays up to 10 of the most current alarm messages that have been logged. Each log entry shows:

- **Bootup Count** - number (the bootup count is incremented each time the machine is turned on).
- **Time (ms)** - the time in milliseconds since bootup when the latest alarm condition occurred.
- **# Times** - the number of times that the specific alarm condition has occurred during the noted bootup count.
- **Alarm** - message associated with the particular alarm condition.

Alarm Log

Bootup Count	Time (ms)	# Times	Alarm
14	3165476	4	Check Flow Sensors ▲
14	2571444	9	Vt Not Achieved
14	921980	54	Low Paw
14	114892	34	PEEP Not Achieved
14	106884	2	Sustained Paw
13	663900	2	Ventilate Manually:Pressure Limit Switch Failure
13	663880	2	Inspiration Stopped ▲
13	319392	4	Low Paw
13	71872	5	Sustained Paw
13	57392	6	Pres Mode Not Avail

Displaying 1-10 of 10
Bootup Count Last Cleared 6
Current Bootup Count: 15

Clear Alarm Log
Go to Service Modes Menu

Figure 4-2 ▪ Alarm Log menu

The bottom left corner of the screen displays additional information:

- Bootup Count Last Cleared
- Current Bootup Count

Clear Alarm Log

Select to clear the alarm log. The system will ask you to confirm that you want to clear the log.

Remarks

After the Alarm Log is cleared:

- the Bootup Count Last Cleared number will be reset to the Current Bootup Count number.
- the menu will show the message “No entries in log!”.

4.3.2 Error Log

There are two special types of alarms:

- Minimum monitoring alarms that stop mechanical ventilation
- Minimum system shutdown alarms that stop mechanical ventilation and monitoring.

An alarm message that results from these special types of alarms is considered an error alarm.

The Error Log displays up to 10 of the most current error messages that have been logged.

Each log entry shows:

- **Bootup Count** - number (the bootup count is incremented each time the machine is turned on).
- **Time (ms)** - the time in milliseconds since bootup when the latest error condition occurred.
- **Address** - the place in the software sequence where the last occurrence of the error took place.
- **Error** - message associated with the particular error condition.

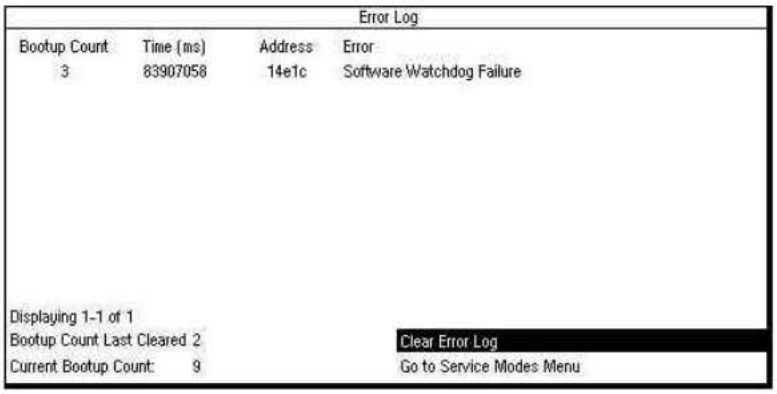

Figure 4-3 ▪ Error Log menu

The error address and software revision are important pieces of information to note if technical support is required.

The bottom left corner of the screen displays additional information:

- Bootup Count Last Cleared
- Current Bootup Count

Clear Error Log

To clear the error log, select “Clear Error Log”. The system asks you to confirm that you want to clear the error log.

Remarks

After clearing the error log:

- the Boot Count Last Cleared number will reset to the Current Boot Count number.
- the menu will show the message “No entries in log!”.

4.3.3 System Configuration

The System Configuration menu includes settings that are tailored to the specific machine.

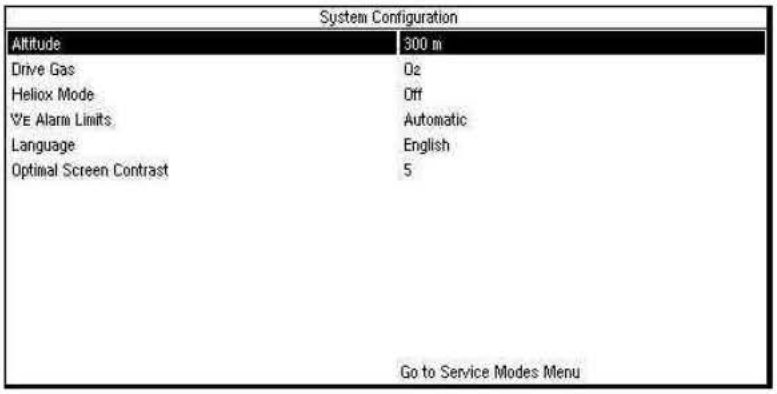

Figure 4-4 ▪ Calibrations/System Configuration menu

4.3.3.1 Altitude

The accuracy of some of the ventilator measurements is altitude sensitive. To ensure the specified accuracy, the altitude setting should be set to the specific altitude where each machine is located.

Altitude settings range from -400 to 3600 meters in increments to 100 meters.

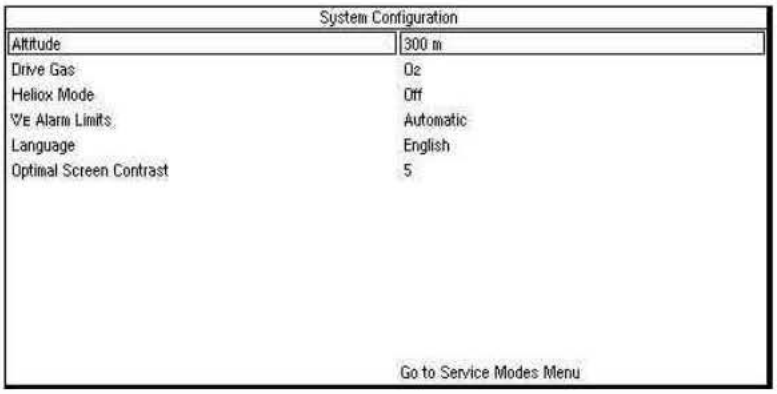

Figure 4-5 ▪ Altitude menu item

4.3.3.2 Drive Gas

Either O_2 or Air can be used as the drive gas for the ventilator's pneumatic engine. To compensate volume calculations for the specific density of the drive gas used, the drive gas selection on this menu must match the actual drive gas.

To change the actual drive gas, refer to Section 9.5.

⚠ CAUTION If you change the drive gas, you must also change the drive gas selection on this service setup screen. If the drive gas selection and the actual drive gas do not agree, volumes will not be correct.

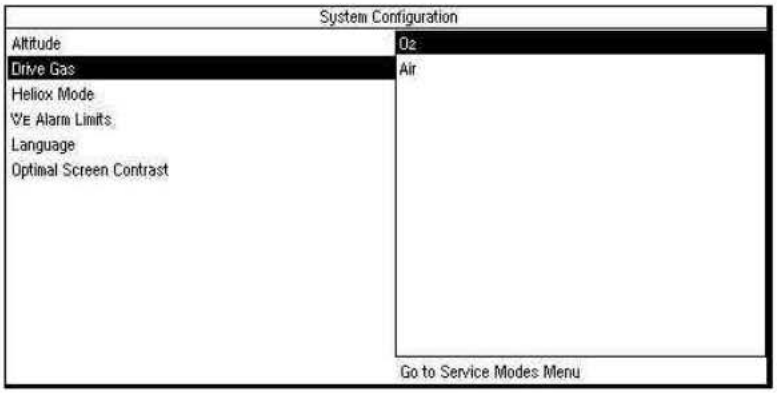

Figure 4-6 ▪ Drive Gas menu item

4.3.3.3 Heliox Mode

Aespire 7900 machines can not be configured to deliver Heliox.

The Heliox Mode should be set to "Off". With the Heliox Mode Off, the Setup/Calibration menu will not include the Heliox option.

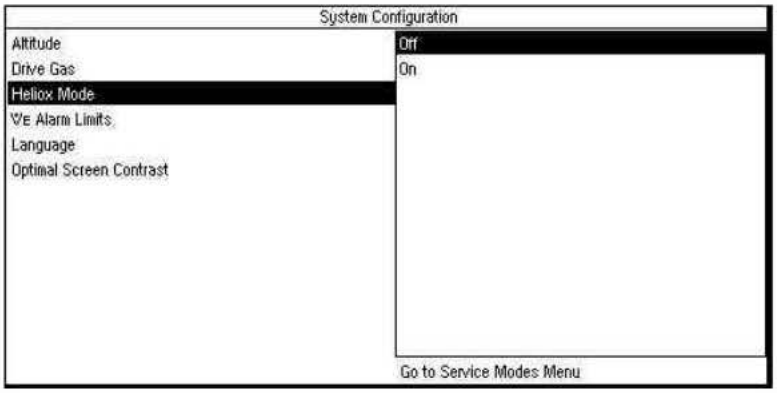

Figure 4-7 ▪ Heliox Mode menu item

4.3.3.4 VE Alarm Limits

The setting for VE Alarm Limits determines how the VE Alarm Limits are set:

- If VE Alarm Limits is set to User Adjustable, the user sets the limits on the Alarm Settings menu.
- If VE Alarm Limits is set to Automatic, the ventilator software calculates the high and low VE alarm limits and sets them to ±20% of the set VE. The user is still able to change the limits through the Alarm Settings menu in the Main Menu.

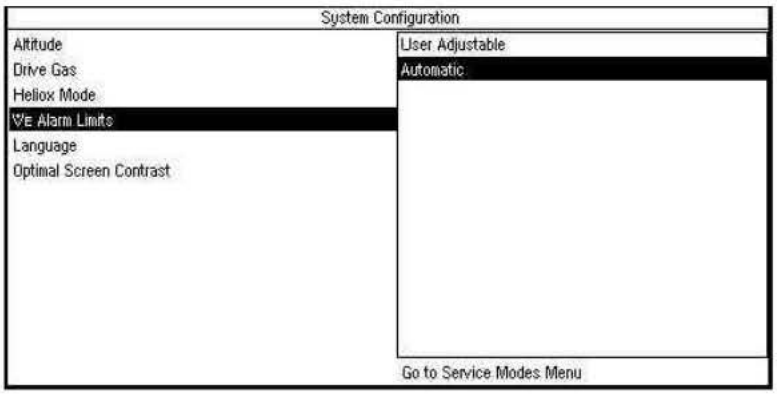

Figure 4-8 ▪ VE Alarm Limits menu item

4.3.3.5 Language

The text shown in the normal mode of operation is language sensitive. However, the majority of service confirmation and calibration modes are shown in English. The other language choices are shown in specific language text with the exception of Japanese which is shown in English.

- Dutch. . . . . Nederlands
- English. . . . . English
- French. . . . . .Français
- German. . . . .Deutsch
- Italian. . . . . Italiano
- Japanese. . . Japanese
- Polish. . . . . Polski
- Portuguese. .Português
- Spanish. . . . Español

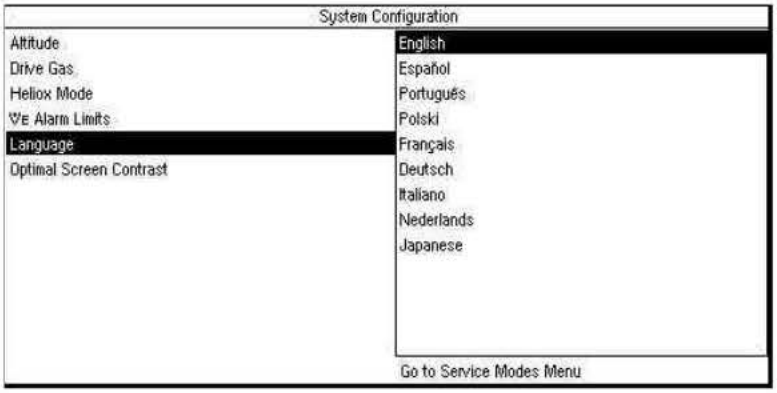

Figure 4-9 • Language menu item

4.3.4.6 Optimal Screen Contrast

The Screen Contrast menu is used to select the display brightness. The values range from 1 to 10, with 10 having the most screen contrast.

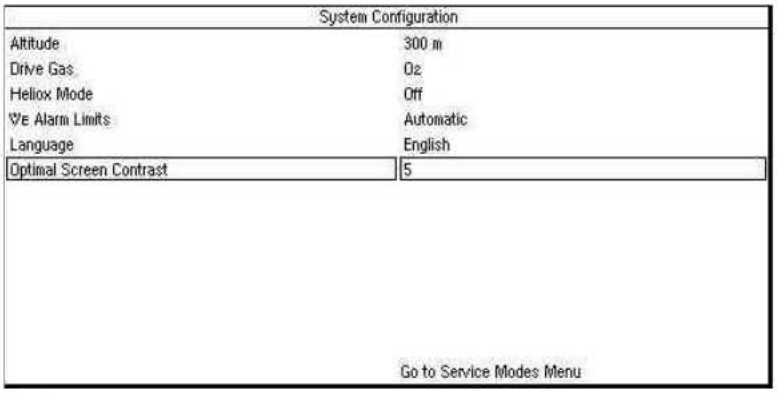

Figure 4-10 • Optimal Screen Contrast menu item

4.3.4 User Select Defaults

The User Select Defaults menu determines the control settings used by the system at power up.

Settings related to optional ventilation modes will only appear in the User Select Defaults if the optional modes are active. These settings include:

- Rate for SIMV and PSVPro
- Trigger Window
- Flow Trigger Level
- Insp. Termination Level
- Tinspired

User Select Defaults — Page 1 of 2

Parameter (Range)	Current Value
Powerup/End Case Settings:	Last Case
Ventilation Mode	Volume Control
VT (20-1500 mL)	500 mL
Pinspired (5-60 cm H2O)	10 cm H2O
Rate for Vol Cntrl and Pres Cntrl (4-100 breaths/min)	12 breaths/min
Rate for SIMV and PSVPro (2-60 breaths/min)	12 breaths/min
I:E (2:1 - 1:8)	1:2
Plimit (12-40 cmH2O)	40 cm H2O
Inspiratory Pause (Off, 5-60%)	10% of Ti

More Defaults
Go to Service Modes Menu

Figure 4-11 ▪ Page 1 of User Select Defaults menu

User Select Defaults — Page 2 of 2

Parameter (Range)	Current Value
Low O2 alarm limit (18 - 99%)	21%
High O2 alarm limit (21 - 99%, Off)	Off
Low VE alarm limit (Off, 0.1 - 10 L/min)	2.0 L/min
High VE alarm limit (0.5 - 30 L/min, Off)	10.0 L/min
Low VTE alarm limit (Off, 5 - 1500 mL)	Off
High VTE alarm limit (20 - 1600 mL, Off)	1000 mL
Trigger Window (0 - 80%)	25%
Flow Trigger Level (0.2 - 10 L/min)	2.0 L/min
Insp. Termination Level (5 - 75%)	30%
Tinspired (0.2 - 5.0 sec)	1.5 sec

More Defaults
Go to Service Modes Menu

Figure 4-12 ▪ Page 2 of User Select Defaults menu

Powerup/End Case Settings

If Last Case is selected, the system saves settings when the unit is turned off and powers up with the same settings. If Facility Defaults is selected, the system powers up with the default facility settings and returns to default settings when End Case is selected.

⚠ **CAUTION** Ask the customer BEFORE changing any default settings. Make sure that they understand these options can only be set in Service Mode.

The following parameters may be set in User Select Defaults:

- Ventilation Mode
- Tidal Volume (VT)
- Inspired Pressure (Pinspired)
- Respiratory Rate
- I:E Ratio
- Pressure Limit (Plimit)
- Inspiratory Pause
- Low O_2 Alarm Limit
- High O_2 Alarm Limit
- Low VE Alarm Limit
- High VE Alarm Limit
- Low VTE Alarm Limit
- High VTE Alarm Limit
- Trigger Window (optional)
- Flow Trigger Level (optional)
- Inspiratory Termination Level (optional)
- Tinspired

4.3.5 Test CPU and Memory

The software checks the CPU, ROM, RAM, and display RAM through this menu. When Start Test is selected the series of tests begins to run. When each test is running, the word "Testing. . ." appears after the test name.

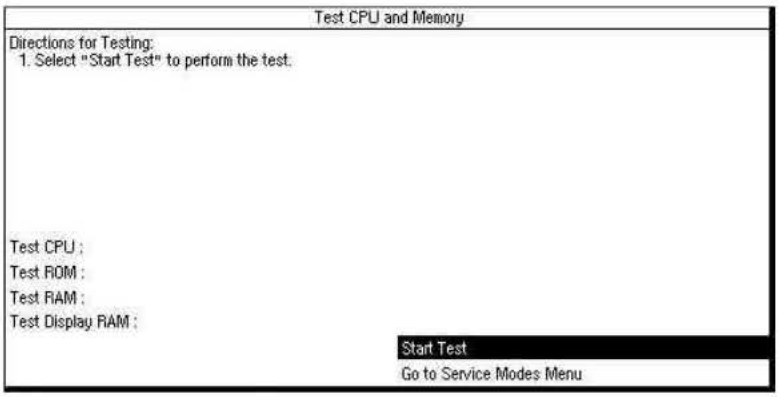

Figure 4-13 ▪ Test CPU and Memory menu

First the software tests the CPU integer instruction set and the CPU register(s). If this test fails, the CPU did not perform the integer instruction set correctly, or the CPU register(s) have failed.

Next, the software tests the Flash ROM via a CRC check (Cyclic Redundancy Check). A CRC value has been calculated for the Flash ROM memory and this value is stored in the Flash ROM. This test recalculates the CRC for the Flash ROM and compares it to the value stored in Flash ROM. If the value that was calculated does not equal the value that was stored in Flash ROM, the test will fail.

Finally, the software tests all the external and display RAM memory with a walking bit pattern test. It writes a certain bit pattern to a block of memory and then reads that block of memory. If the bit pattern what it wrote is not the same bit pattern that it reads back, the test fails.

When the test is complete and has passed, the word "Pass" appears after the name of the test, as in Figure 4-14.

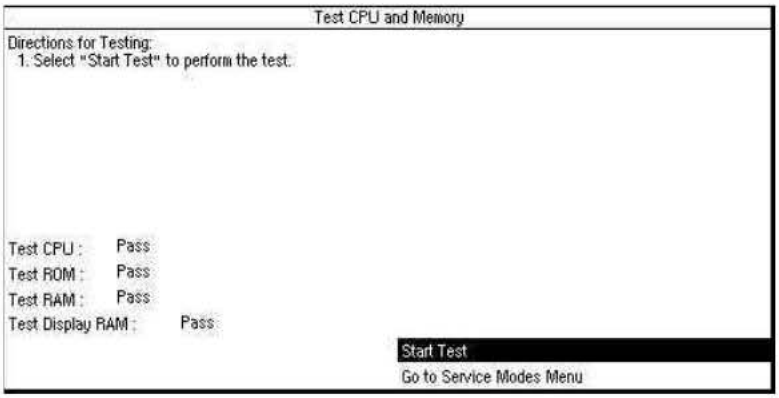

Figure 4-14 ▪ Test CPU and Memory menu after all the tests have passed

4.3.6 Test EEPROM

The software tests all the EEPROM memory via a bit pattern test. It writes a certain pattern to a block of memory and then reads back that block of memory. If the bit pattern that was written is not the same bit pattern that it reads back, the test fails.

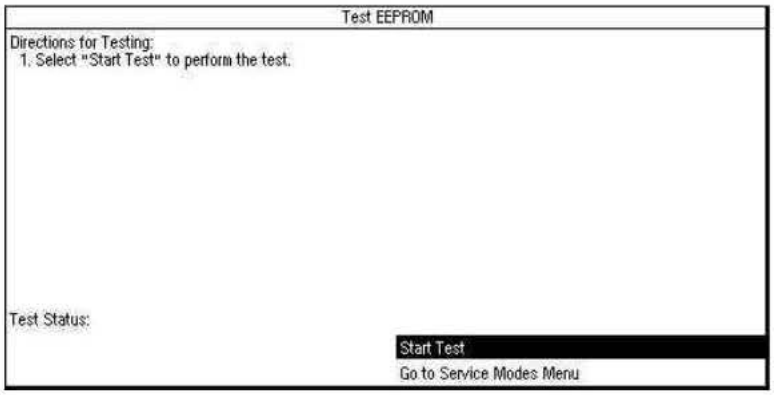

Figure 4-15 ▪ Test EEPROM menu

4.3.7 Test GIV

To test the GIV (gas inlet valve) the software first closes the GIV. It reads the A/D channel for the GIV. If the A/D channel for the GIV does not read closed, the test fails; otherwise, the test continues.

The software then opens the flow valve to the calibrated flow of the bleed resistor and waits for the flow to stabilize (about 2 seconds). Once the flow is stabilized the software checks to see if manifold pressure has dropped to less than 0.5 cm H_2O. If manifold pressure does not drop below 0.5 cm H_2O, the test fails; otherwise, the test continues.

The software then closes the flow valve and opens the GIV. It reads the A/D channel for the GIV. If the A/D channel for the GIV does not read open, the test fails.

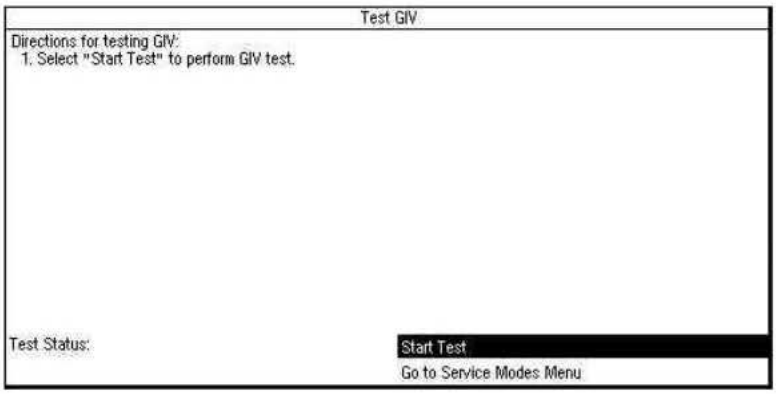

Figure 4-16 ▪ Test GIV menu

GIV Test FAIL instructions

Failure can be caused by the valve or the CPU board malfunctioning.

Use a multimeter to measure the resistance of the GIV solenoid. It should be approximately 25 ohms. If necessary, replace the GIV solenoid (Section 9.24.2).

Use a multimeter to measure the voltage at the inlet valve connector on the pneumatic connection board. The voltage should be 4.5 volts when the GIV is open.

- If the voltage is 4.5 volts or greater, service the GIV (Section 9.24.3).
- If the voltage is less than 4.5 volts replace the CPU board (Section 9.23.1).

4.3.8 Test Flow Valve

To test the flow valve the software starts by closing the flow valve. It then opens the flow valve in increments until the flow valve is completely open. At each of the settings of the flow valve the A/D (Analog/Digital) channel for Flow DAC (Digital to Analog Converter) Feedback and Flow Current Sense will be read. If the A/D for the Flow DAC Feedback and Flow Current Sense are not within the correct tolerance the test fails.

After setting the Bag/Vent switch to Vent, disengage the drive gas from the breathing system by removing the bellows housing.

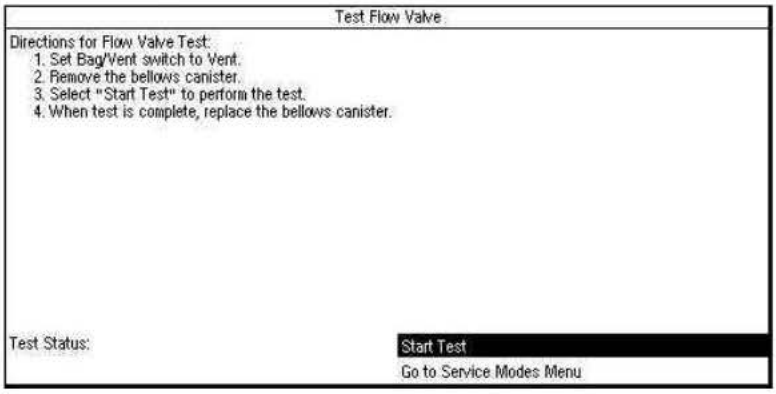

Figure 4-17 ▪ Test Flow Valve menu

Flow Valve Test FAIL instructions

A failure can be caused either by the drive circuit or a flow valve malfunction.

Go to the “Flow Valve Test Tool” menu to check the drive circuit for proper voltage output.

Set the flow control to output 120 liters per minute. Unplug the connector from the pneumatic connection board and measure the resistance between the leads at the unplugged flow valve connector. A multimeter should read approximately 1.75 ohms.

- If the resistance is approximately 1.75 ohms, the drive circuit is bad, replace the CPU board (Section 9.23.1) and test the flow valve again.
- If the flow valve test fails again, replace the flow valve (Section 9.24.2).

4.3.9 Test Drive Pressure Limit Switch

The software tests the pressure limit switch to make sure that it trips at the correct manifold over pressure. The software opens the flow valve to a value where pressure continues to increase. It then waits for the DPL (Drive Pressure Limit) switch to trip. The pressure at which the DPL switch tripped is indicated. This value is the manifold pressure measured upstream of the drive gas check valve (the typical reading is 112 cm H_2O), not the actual pressure at the switch. If the DPL switch never trips (within 15 seconds) the test fails. If the DPL switch does not trip at a pressure within the correct tolerance, the test fails.

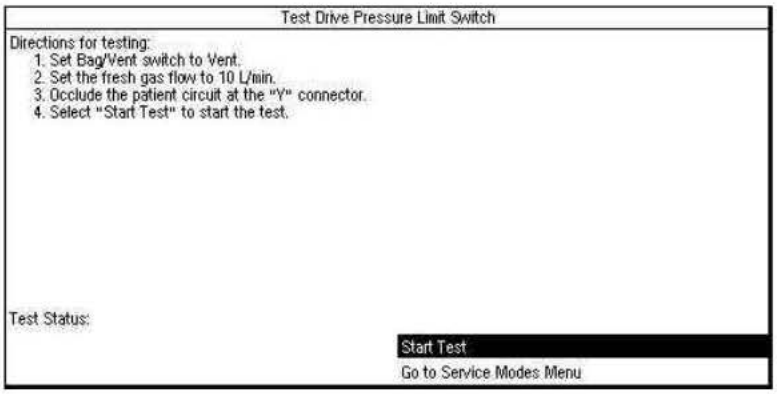

Figure 4-18 ▪ Test Drive Pressure Limit Switch menu

Drive Pressure Limit Switch FAIL instructions

Go to the Discrete I/O signal menu and check the DPL (Drive Pressure Limit) switch status (Off).

Remove the rear subfloor. Connect a pressure test device to the black inline connector that is in the Exhalation Valve interface cuff tubing (SIB side).

Apply 104 +5/-4 cm H_2O (76.5 +3.8/-2.9 mm Hg) to activate the switch. Verify status change on the I/O signal screen (On).

If problem continues, replace SIB.

4.3.10 Test 5V Fail Alarm

A 5-Volt supply (VDD) is used to power the digital circuits throughout the ventilator.

The 5-Volt supply (VDD) is derived in the power section of the control board. It is used to power the digital circuits throughout the ventilator. If the 5-Volt supply fails, the ventilator will sound a continuous alarm tone when the system switch is turned on.

To test the 5V Fail Alarm, follow the directions on the screen.

If the alarm tone does not sound, replace the CPU board (Section 9.23.1).

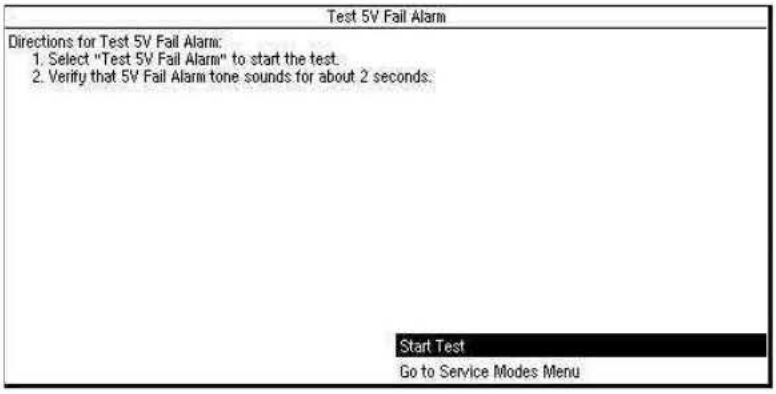

Figure 4-19 ▪ Test 5V Fail Alarm menu

4.3.11 Test Serial Ports

Two serial port tests may be done:

- **Public Port Test (Com 2)**
  requires pins 6 and 13 of the external serial connector (located on the left side of the machine) to be jumpered.

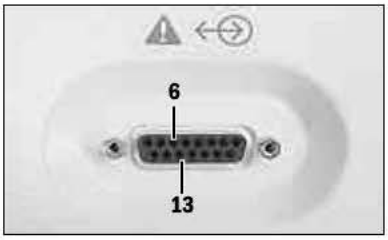

- **Proprietary Port Test (Com 1)**
  requires pins 2 and 3 of the internal (download) serial connector (located above the lower electronic enclosure) to be jumpered.

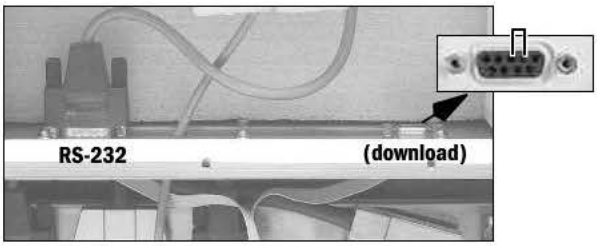

Each test routine sets up the serial port circuits so transmitted data is echoed directly back to the receive circuits. The test fails if the data sent out is not equal to the data received.

If only the Proprietary Port Test fails, replace the CPU.

If both tests fail:

- check the harness connections between the control board and the Serial Adaptor Board (SAB).
- check the ribbon cable between the SAB and the external connector.
- replace the SAB.

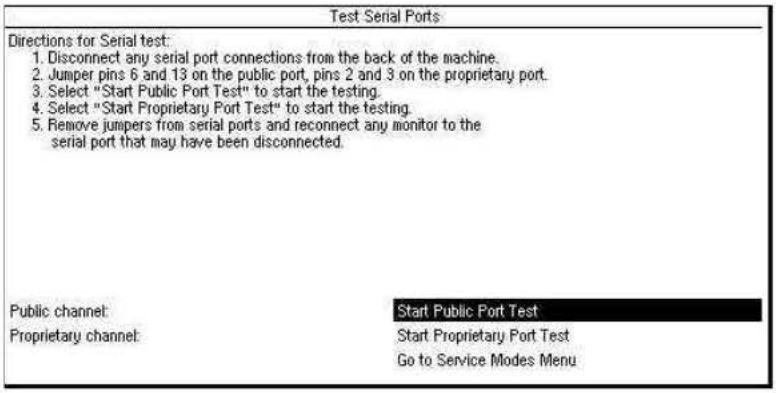

Figure 4-20 ▪ Test Serial Ports menu

4.3.12 Breathing System Leak Test

You can estimate how much of a leak there is in the ventilator portion of the breathing system by closing the patient circuit, inflating the bellows, and observing how quickly they fall on their own weight (part of the machine checkout procedure).

The Breathing System Leak Test allows you to more precisely test the ventilator portion of the breathing circuit for leaks.

Note For the breathing sysem leak test to function correctly, the flow valve must be calibrated (see section 4.3.22).

By using the patient circuit to establish a closed loop, you can measure the leak rate.

- The leak rate is the fresh gas flow needed to maintain 30 cmH2O.
- The system should have a leak rate <200 mL/min.

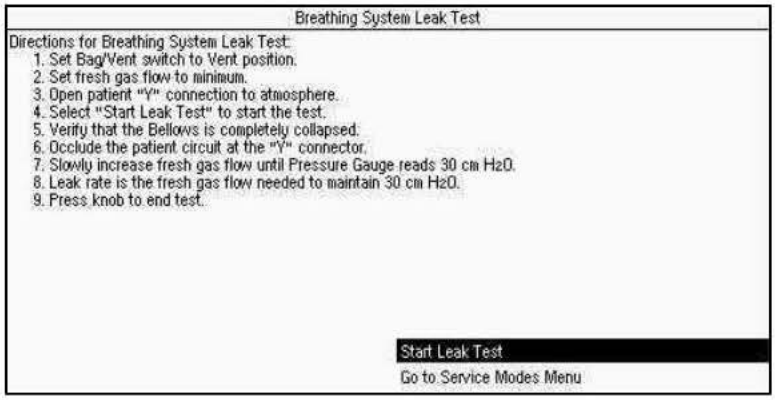

Figure 4-21 • Breathing System Leak Test menu

4.3.13 Display A/D Channels

The software displays the A/D values for each of the A/D channels.

Display A/D Channels — Page 1 of 2

A/D Channel	Counts	Actual	Range
Inspiratory Flow	2034	0.000 L/min	-120 to 120 L/min
Expiratory Flow	2039	-0.025 L/min	-120 to 120 L/min
Airway Pressure	827	0.680 cm H_2O	-20 to 120 cm H_2O
Manifold Pressure	811	-0.040 cm H_2O	-20 to 120 cm H_2O
O_2	1644	100.000 %	0 to 100%
Flow Current Sense	2	0.000 Amps	0 to 1.024 Amps
Flow DAC Feedback	0	0.001 Volts	0 to 4.095 Volts
Battery Voltage	3312	13.300 Volts	7.0 to 16.0 Volts
Battery Current	980	-0.042 Amps	-0.6 to 6.0 Amps

Next A/D Menu
Go to Service Modes Menu

Figure 4-22 ▪ Page 1 of Display A/D Channels menu

Display A/D Channels — Page 2 of 2

A/D Channel	Counts	Actual	Range
1.225 Volt Ref	1226	1.227 Volts	1.214 to 1.235 Volts
5.8 Voltage Test	2424	5.881 Volts	4.86 to 6.24 Volts
+15V Analog Supply	2083	14.986 Volts	13.77 to 16.27 Volts
-15V Analog Supply	906	-15.012 Volts	-12.62 to -17.46 Volts
+12V SIB Supply	2044	11.980 Volts	10.44 to 13.6 Volts
VEL Supply	2459	14.433 Volts	9.56 to 15.69 Volts
VSW Supply	2071	14.907 Volts	9.13 to 17.04 Volts
+12V Light Supply	2035	11.939 Volts	10.00 to 12.73 Volts
GIV Current Sense	6	0.363 mA	143.7 to 235.4 mA

Next A/D Menu
Go to Service Modes Menu

Figure 4-23 ▪ Page 2 of Display A/D Channels menu

Remarks

This selection displays a listing of A/D Channels which are at various values depending upon the set parameters.

Refer to the following table for additional details for each of the displayed channels.

Table 4-1 A/D Channe

A/D Channel	Counts[1]	Actual Range[1]	Displayed Range	Special Instructions
Inspiratory Flow[2]	1800-2300	Near Zero L/min	-120 to 120 L/min	Zero Offset Reading (nominal 2050 Counts)
Expiratory Flow[2]	1800-2300	Near Zero L/min	-120 to 120 L/min	Zero Offset Reading (nominal 2050 Counts)
Airway Pressure[2]	550-1050	Near Zero cm H_2O	-20 to 120 cm H_2O	Zero Offset Reading (nominal 800 Counts)
Manifold Pressure[2]	550-1050	Near Zero cm H_2O	-20 to 120 cm H_2O	Zero Offset Reading (nominal 800 Counts)
O2	0-4095	0 to 100%	0 to 100%	Count weight and limits are determined during O2 calibration
Flow Current Sense	0-4095	0 to 1.024 Amp	0 to 1.024 Amps	
Flow DAC Feedback	0-4095	0 to 4.095 Volts	0 to 4.095 Volts	
Battery Voltage	1740-3976	7 to 16 Volts	0 to 16.48 Volts	<7V = Low battery voltage failure. <11.65V = Low battery voltage warning. >16 Volts (10 Sec) = High battery voltage failure.
Battery Current	700-4000	-600 mA to 6 Amps	-2 to 6.19 Amps	-150 to -600 mA = Battery charging. -601 mA to -2 Amps = Charge current out of range. >300 mA = Operating on battery. >6 Amps = Battery discharge current out of range.
1.225 Voltage Reference	1214-1235	1.214 to 1.235 Volts	0 to 4.095 Volts	
5.8V Voltage Test	1997-2565	4.86 to 6.24 Volts	0 to 9.96 Volts	
+15V Analog Supply	1914-2262	13.77 to 16.27 Volts	0 to 29.46 Volts	
-15V Analog Supply	858-953	-12.62 to -17.46 Volts	-61 to 1.43 Volts	
+12V SIB Supply	1779-2322	10.44 to 13.62 Volts	0 to 24 Volts	
VEL Supply	1645-2675	9.56 to 15.69 Volts	0 to 24 Volts	
VSW Supply	1269-2368	9.13 to 17.04 Volts	0 to 29.46 Volts	
+12V Light Supply	1879-2217	11.02 to 13 Volts	0 to 24 Volts	In Rev 3.4 software, Range = 10.00 to 12.73 Volts
GIV Current Sense[3]	2371-3884	143.7 to 235.4 mA	0 to 248.2 mA	Off state reading is 0 to 259 counts

Notes:

1. **These columns show the acceptable range where possible.**
2. **The A/D count and displayed value shown for Airway Pressure, Manifold Pressure, Inspiratory Flow, and Expiratory Flow are the zero pressure values. These readings should be taken with the flow sensors disconnected by removing the circuit module.**
3. **The count range and displayed value shown for GIV Current Sense is with the GIV turned on. If the GIV is turned off, the off count range is 0 to 259 Counts.**

4.3.14 Display Discrete I/O Signals

The *Discrete I/O Signals* menu displays discrete binary signals associated with machine switch positions.

There are several types of switches in the Aespire 7900 machine:

- some switches are mechanically operated
- some switches are pneumatically operated
- some switches are electronic

Display Discrete I/O Signals

Signal	Status	Signal	Status
ACGO Switch	Vent	O2 Flush	Off
CO2 Bypass	On	Bag/Vent Status	Bag
Canister Status	Closed		
Control Panel Cover	Closed		
O2 Sensor Status	Connected		
Breathing Circuit SW1	On		
Breathing Circuit SW2	On		
Breathing Circuit SW3	Off		
Pressure Limit Status	Off		
O2 Supply Pressure	Pressure		

Go to Service Modes Menu

Figure 4-24 ▪ Display Discrete I/O Signals menu

Mechanical switches

- ACGO Switch – Vent or Aux CGO
- CO_2 Bypass – Off or On (hard-wired On in Aespire 7900 machines)
- Canister Status – Closed or Open
- Control Panel Cover – Closed or Open (refers to removal of the ABS on Aespire 7900 Machines)
- Bag/Vent Status – Bag or Vent

Pneumatic switches

- Pressure Limit Status – Off or On
- O_2 Flush – Off or On
- O_2 Supply Pressure – Pressure or No Pressure

Electronic switches

- O_2 Sensor – Connected or Disconnected

Breathing Circuit Switches (Circuit module ID) :
In Aespire 7900 machines, the switch positions are hard-wired in the ESIB to ABS harness to indicate Circle patient circuit.

- Breathing Circuit SW1 – On
- Breathing Circuit SW2 – On
- Breathing Circuit SW3 – Off

4.3.15 Display Battery Status

The software displays the battery charge status. This checks the battery charge current.

Note: A negative current value means the battery is charging.

Battery Status	Values Displayed
On Battery	Battery Current > 0.300 Amps
Battery Charging	-0.600 ≤ Battery Current ≤ -0.150
Battery Charged	none of the above

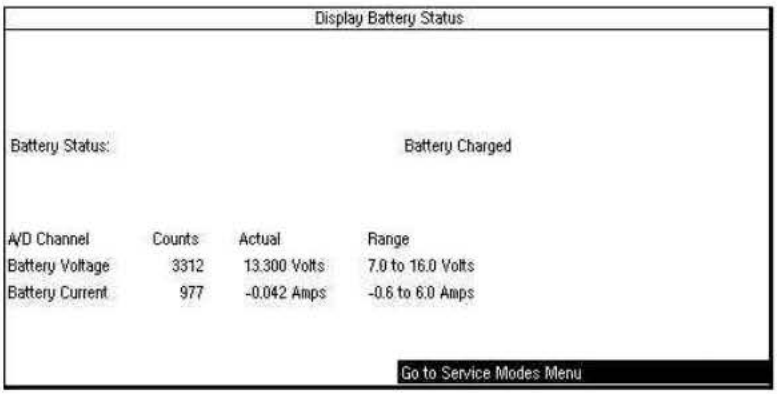

Figure 4-25 ▪ Display Battery Status menu

If the battery has been on charge for several hours and you get a “battery is not charged” display:

- Check the battery in-line cable fuse.
- If the fuse is good, the battery is bad and you should replace it.

4.3.16 Test Panel Switches

In the Test Panel Switches menu the software is set up to receive keyboard button presses and rotary encoder turns.

Press each button and turn the encoder one full turn in both directions.

When a button is pressed and held, the icon on the screen next to the button will contain an “x”.

After testing all the buttons and the control knob, select “Test Encoder Knob Turn”.

As you turn the encoder knob, verify that:

- each click of the encoder in the clockwise direction increments the clockwise total.
- each click of the encoder in the counterclockwise direction increments the counterclockwise total.

Remarks

If any of the select buttons test fails, replace the front panel keyboard assembly (Section 9.22.1). If the encoder knob test fails, replace the rotary encoder assembly (Section 9.22.2).

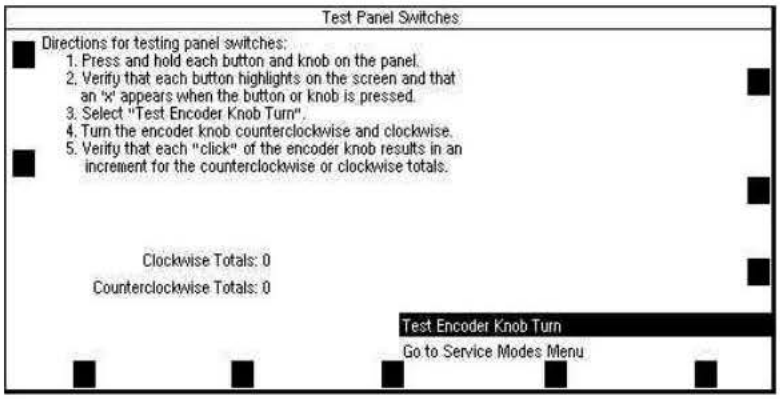

Figure 4-26 ▪ Test Panel Switches menu

4.3.17 Flow Valve Test Tool

The Flow Valve Test Tool is available for test and troubleshooting purposes only. It allows you to manually control the flow valve setting from 0 (closed) to 120 LPM, in 1 LPM increments, and observe key pressure and flow measurements on the same screen.

This is mainly used to test the drive gas circuit and MOPV valves as detailed in the MOPV test procedure (Section 6.4). However, it can also be used for other troubleshooting procedures whenever a set flow is required.

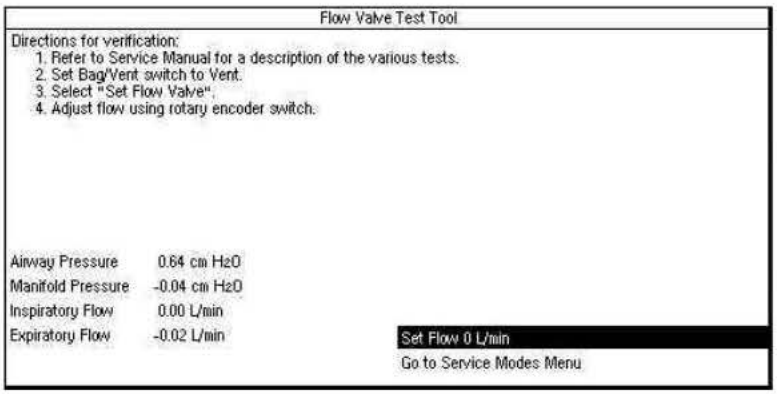

Figure 4-27 ▪ Flow Valve Test Tool menu

Note: The flow does not turn off automatically. The flow must be set to zero to stop flow. Flow will originally be set to zero upon entering this screen.

4.3.18 Adjust Drive Gas Regulator

The Adjust Drive Gas Regulator procedure establishes the required flow rate through the drive gas regulator for proper calibration.

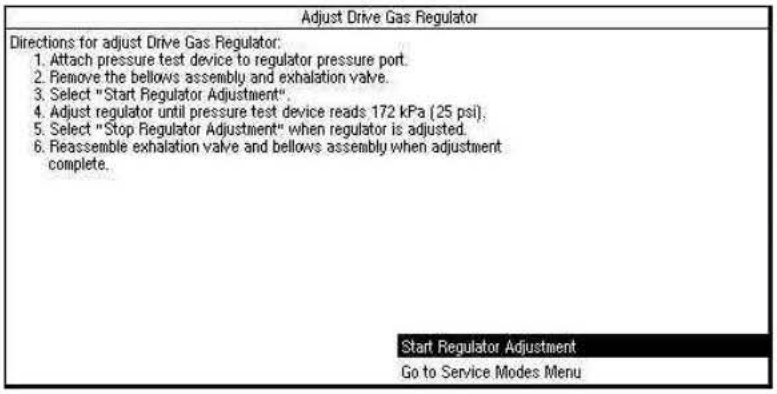

Figure 4-28 ▪ Adjust Drive Gas Regulator menu

Remarks

The drive gas regulator should provide a constant gas input pressure of 172 kPa (25 psi).

You can verify this pressure by attaching a pressure test device to the regulator pressure port (shown below) and performing the above procedure.

If required, adjust the regulator to 172 ±1.72 kPa (25 ±0.25 psi).

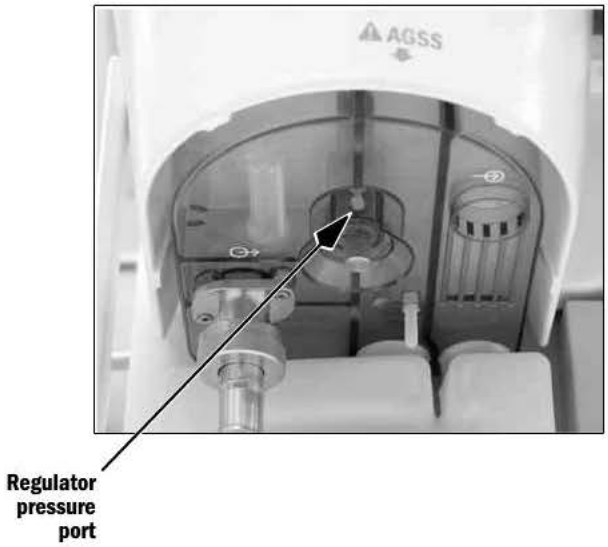

Figure 4-29 ▪ Location of the regulator pressure port

4.3.19 O_2 Calibrations

The O_2 Calibrations take into account the altitude setting. Before starting the calibrations, ensure that the altitude setting (in Calibrations/System Configuration) is set to the appropriate altitude for the machine location.

Note: a circle module is required for all calibrations.

For the 21% O_2 calibration, software reads the A/D value for the O_2 sensor when the O_2 sensor is exposed to room air (21% O_2).

- If this A/D value is not within the tolerance, the calibration fails.
- If the calibration passes, the A/D value is stored in the EEPROM.

The sensor must be calibrated at 21% O_2 before calibration at 100% O_2.

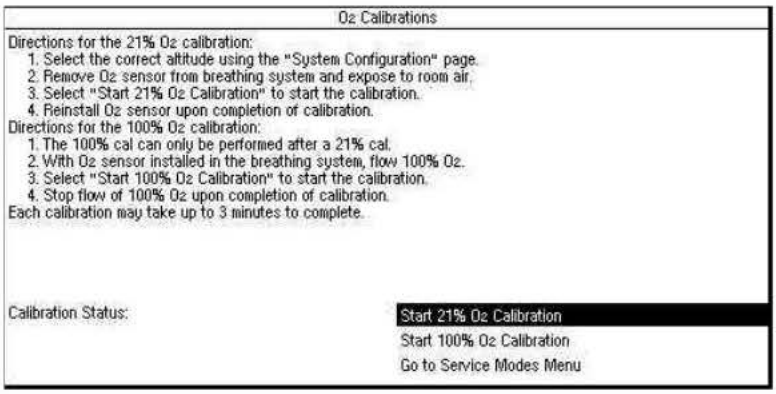

Figure 4-30 ▪ O2 Calibrations menu

Remarks

Remove the O2 sensor from the breathing system and expose it to room air. The displayed reading should be 21% ±2% to pass the calibration requirements.

Reinstall the sensor that passed the 21% test in the breathing system and expose it to 100% O2. Select “Start 100% O2 Calibration” to begin test.

If it displays readings higher or lower than required to pass, replace the sensor.

4.3.20 Calibrate Flow Sensors

The software calibrates the inspiratory flow, expiratory flow, airway pressure and manifold pressure transducers for zero flow/pressure offset voltage. It does so by reading the A/D values for inspiratory flow, expiratory flow, airway pressure and manifold pressure when the flow sensor module has been disconnected from the bulkhead connector. If the A/D values are not within the correct tolerance, the calibration fails. If the calibration passes, the offset A/D values at which the inspiratory flow, expiratory flow, airway pressure and manifold pressure transducers were calibrated at, are stored in the EEPROM.

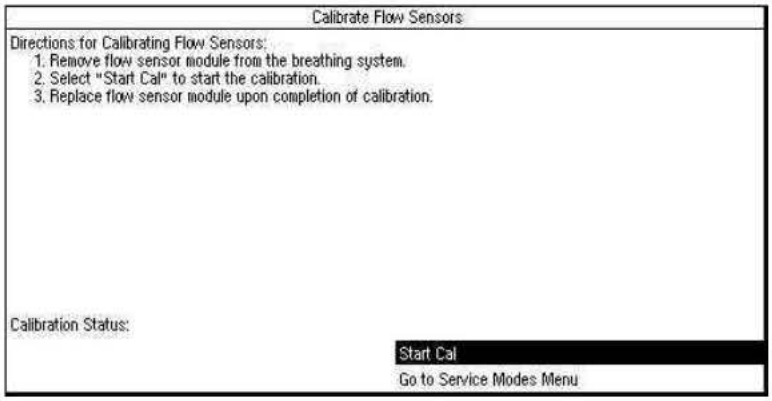

Figure 4-31 ▪ Calibrate Flow Sensors menu

Remarks

Fail - indicates a problem with the ESIB.

Inspect the Bulkhead Connector and ESIB tubing for moisture or possible occlusion.

Check for bad differential pressure transducer.

- Ensure that the flow sensor module is disconnected from the bulkhead panel.
- Check the transducer outputs using the Display A/D menu.
- If the transducer is out of tolerance (Refer to Table 4-1, on page 4-23), replace the ESIB assembly.

4.3.21 Pressure Sensitivity

The software prompts the user to perform the procedure to calibrate the pressure sensitivity. This calibration is not an automated calibration. It prompts the user to follow a set of procedural steps to perform the calibration. This calibration calculates the pressure sensitivity at four different pressures. It uses these four different pressure points along with the inspiratory flow and expiratory flow zero offsets to find the pressure sensitivity. If the calculations for the pressure sensitivity are not within the correct tolerance, the calibration fails. If the calibration passed, the four pressure sensitivity points are stored in the EEPROM.

Note This pressure transducer calibration must be performed if the SIB assembly or CPU board is replaced.

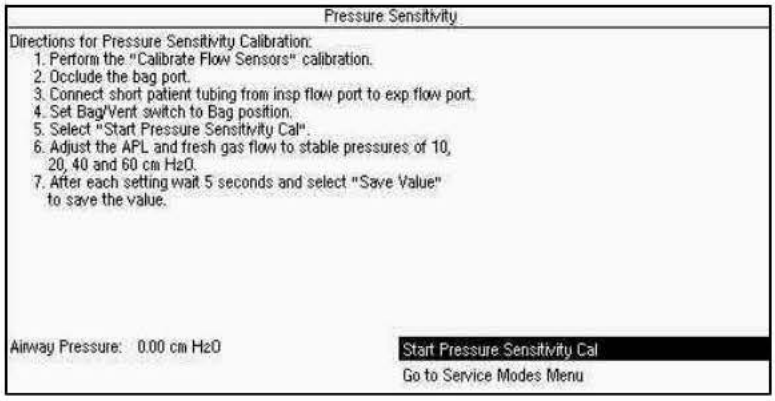

Figure 4-32 ▪ Pressure Sensitivity menu

Pressure sensitivity FAIL instructions

Flow Sensor Leak Test:

1. Select "Display A/D Channels" from the Diagnostic Tests/Tools menu.
   Set Fresh gas flow to 2 LPM.
   Open the APL valve (0 cm H_2O).
   Place Bag to Vent switch in the Bag/APL position.
   Connect a short tube between the inspiratory and expiratory flow sensors.

The airway pressure, inspiratory flow and expiratory flow on the ventilator display should read near zero (between +0.5 and -0.5 LPM flows).

2. Occlude the bag port. Adjust the APL to read 10 cm H_2O on the gauge. The flow may jump briefly, but should stabilize to read between +0.5 and -0.5 LPM. Very gently push the tubes coming from the flow sensors slightly in all directions. Observe to see if the flow measurements jump.

⚠ **Caution** If either sensor reads more than 2 LPM, STOP. This indicates a possible leak in the flow sensor pneumatic circuit. Skip steps 3 and 4, go directly to step 5. If the pressure is increased further, the ESIB may be damaged.

3. Adjust the APL to read 20 cm H_2O on the gauge. The flows may jump briefly, but should stabilize to read between +0.5 and -0.5 LPM.
4. Adjust the APL to read 40 cm H_2O on the gauge. The flows may jump briefly, but should stabilize to read between +0.5 and -0.5 LPM.
5. If the flow measurements on the ADC page stay near zero, the flow sensors are good. If either sensor indicates a flow where there is none, there may be a leak. To troubleshoot, reduce the circuit pressure back to zero. Reverse the flow sensor connections at the ESIB interface panel and repeat the above tests.
6. If the problem follows the sensor, discard the sensor. It has a leak.
7. If the problem stays with the same side of the circuit, it is likely the leak is in the tubing, not with the sensor.

4.3.22 Calibrate Flow Valve

The software prompts the user to perform the procedural steps to calibrate the flow valve. This is an automated calibration. It gradually opens the flow valve and monitors the manifold pressure. When the manifold pressure reaches 1.9 to 2.0 cm H_2O the value at which the flow valve has been opened is saved. The flow valve is then closed. The value at which the flow valve was opened to is then checked to make sure it is within the correct tolerance. If it is not, the calibration fails. If the calibration passes, the flow valve calibration point is stored in the EEPROM.

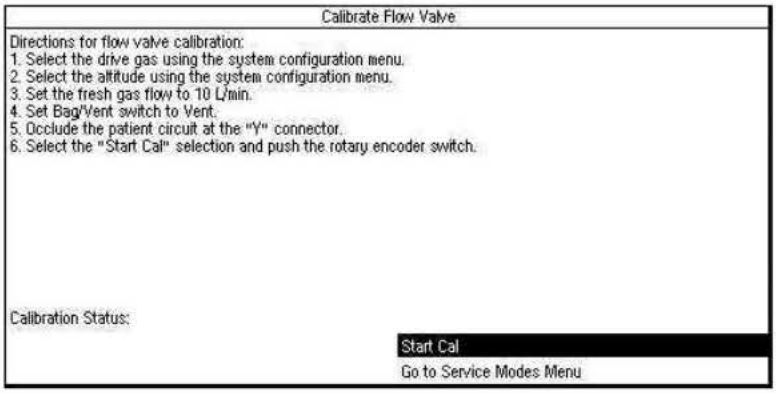

Figure 4-33 ▪ Calibrate Flow Valve menu

Remarks

Check that the Bag/Vent selection switch is in the vent position. If the flow valve calibration test fails immediately, the most likely fault is a failed manifold transducer. It can also be a failed regulator or the regulator could need calibration. Another cause could be a failed flow valve.

4.3.23 Bleed Resistor Calibration

The software calibrates the bleed resistor as described below. Other than the setup procedure, this calibration is completely automated.

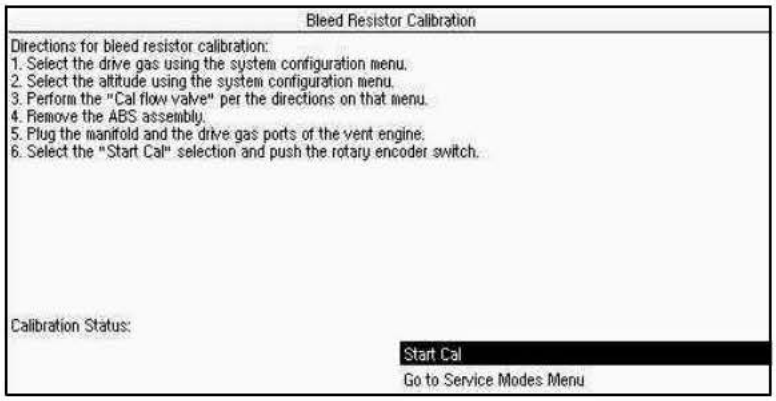

Figure 4-34 • Bleed Resistor Calibration menu

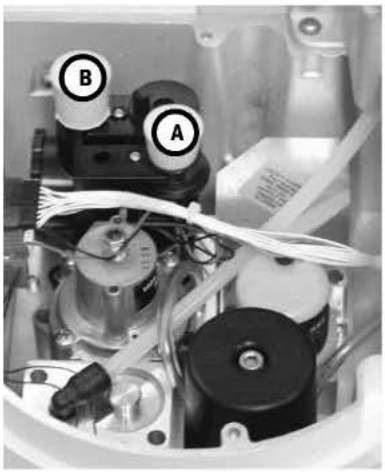

Calibration procedure

1. Remove the ABS breathing system from the machine.
2. Remove the Exhalation Valve.
3. Remove the Vent Engine cover.
4. Plug the Manifold Port (**A**) and the Drive Port (**B**) on the Vent Engine interface valve.
5. On the Bleed Resistor Calibration menu, select ***Start Cal***.
6. Push the rotary encoder knob to start the calibration.

Software procedure

The software performs the calibration as follows:

1. Opens the flow valve to the high-pressure starting point (where manifold pressure is 91-92 cm H_2O).
2. Waits for the pressure to stabilize.
3. Once the pressure is stabilized, sets the flow to a predetermined level.
4. Wait for the pressure to stabilize.
5. Repeat steps 1-4, replacing step 3 with progressively smaller flows.

There are 12 points that are calculated for the bleed resistor calibration. If the calibration passes, the calculated bleed resistor calibration points are stored in EEPROM.

Remarks

If the bleed resistor calibration test fails, check altitude and drive gas settings. Ensure that the breathing circuit gas is exhausting out the scavenging port during the test. A negative finding indicates a massive circuit leak. Check for proper regulator pressure calibration. Ensure that the Flow Valve Cal test was conducted properly. Otherwise, failure indicates a calibration problem with the flow valve.

4.3.24 Service Calibrations Required

The *Schedule Service Calibrations* menu lists which setting or calibration must be performed when the "Service Calibration ⚠" alarm appears in normal operation. After the setting or calibration is properly completed, the text for that setting or calibration is removed from the list.

Figure 4-35 ▪ Service Calibrations Required menu

The normal operation "Service Calibration ⚠" alarm message is only removed when all the required settings or calibrations are completed.

Remarks

The **Set Service Calibration** menu item is used by the **factory** to activate the Service Calibration alarm and require that all settings and calibrations be performed when the Aespire machine is set up for operation at its permanent location.

There is no need to set the "Service Calibration ⚠" alarm in the field.

Select "No" when the following warning appears if you selected the "Set Service Cal" menu item.

Figure 4-36 ▪ Set Service Calibration menu

If you select “Yes” you will see the screen displayed in Figure 4-37. Follow the directions on the screen to complete the calibrations.

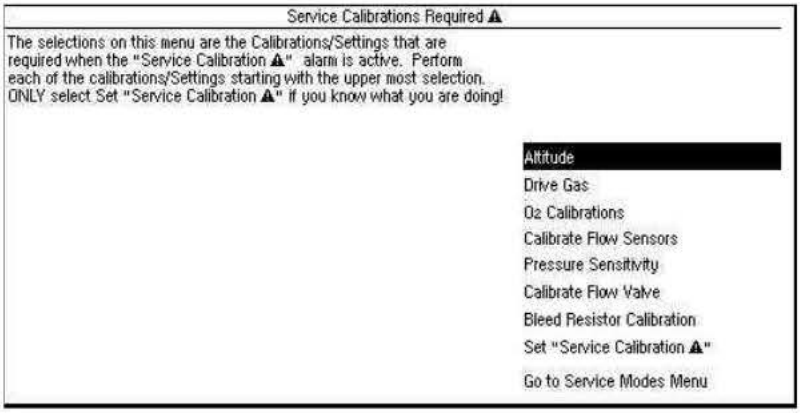

Figure 4-37 • Service Calibration full menu

5 Calibration

⚠ **WARNING** After adjustments and calibration are completed, always perform the checkout procedure. Refer to Section 3 of this manual.

In this section This section covers calibration procedures for components of the Aespire anesthesia machine.

5.1 Primary Regulators 5-2

5.1.1 Test setup 5-2

5.1.2 Testing Primary Regulators 5-2

5.1.3 Adjusting Primary Regulators 5-6

5.2 Secondary Regulators 5-7

5.2.1 Testing/Adjusting Secondary Regulators or Balance Regulators 5-7

5.3 Flowmeter Needle Valve Calibration 5-8

5.3.1 O_2 Needle Valve Calibration (Minimum Flow) 5-8

5.3.2 N_2O Needle Valve Calibration (Minimum Flow) 5-10

5.3.3 Air Needle Valve Calibration (Minimum Flow) 5-14

5.4 Link system calibration 5-17

5.5 Airway pressure gauge 5-22

5.5.1 Zero the pressure gauge 5-22

5.5.2 Checking the pressure gauge accuracy 5-23

5.1 Primary Regulators

Follow the procedure in Section 5.1.1 to gain access to the regulators. Then, in Section 5.1.2, select the test that is appropriate for the regulator you are testing.

⚠ WARNING When testing/adjusting N_2O regulators, nitrous oxide flows through the system. Use a safe and approved procedure to collect and remove it.

5.1.1 Test setup

⚠ WARNING Wear safety glasses while test device is connected to the test port.

⚠ CAUTION Be careful not to plug the output of the primary regulator without having a pressure relief valve in the output circuit.

1. Set the system switch to Standby.
2. Disconnect all pipeline supplies.
3. Remove the upper rear panel (Section 9.2).
4. If equipped, turn the auxiliary O_2 flowmeter control fully clockwise (no flow).
5. Install a full cylinder in the cylinder supply to be tested. It is essential that the cylinder be within 10% of its full pressure.
6. Remove the plug from the test port and connect a test device capable of measuring 689 kPa (100 psi).

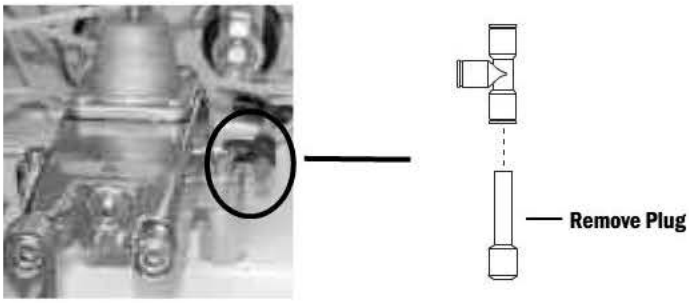

5.1.2 Testing Primary Regulators

There are two variations of the test procedure for the primary regulators:

- Test A – For primary regulators that supply drive gas to the ventilator.
- Test B – For all gases not used to supply drive gas to the ventilator.

Test A **For primary regulators that supply drive gas to the ventilator (O_2 or Air):**

Under low flow conditions, the output pressure of a properly adjusted/ functioning regulator should fall within specifications listed in step 4. Under high flow conditions, the output pressure should not drop below the specifications in step 12.

1. Remove the bellows assembly.
2. Slowly open the cylinder valve.
3. Set the system switch to On.
4. **Low Flow Test:** Set the fresh gas flow to 0.05 L/min (or minimum flow for O_2). When checking an Air regulator on systems that have a single flowtube, open the needle valve 1/8 turn from the minimum stop to achieve a flow close to 0.05 L/min.
   - Close the cylinder valve and allow the pressure to decay to 2068 kPa (300 psi) as indicated on the cylinder gauge (upper limit of the red band). The flow may be temporarily increased to facilitate the decay.
   - At the time that the cylinder pressure reaches 2068 kPa (300 psi), set the system switch to Standby.
   - Within one minute, the test device must stabilize between:

     (60) DIN 372–400 kPa (54–58 psi)

     (50) Pin Indexed 310–341 kPa (45.0–49.5 psi).
     - If the test device pressure does not stabilize within one minute, replace the cylinder supply.
     - If the test device stabilizes within one minute, but the readings are not within specifications, readjust the regulator (Section 5.1.3).
5. Slowly open the cylinder valve.
6. Enter the Service Mode:
   (Push and hold the adjustment knob on the ventilator's display and set the system switch to On.)
7. Select and confirm "Service Mode."
8. Select and confirm "Flow Valve Test Tool."
9. Select and confirm "Set Flow (L/min)."

10. **High Flow Test:** Rotate adjustment knob counterclockwise to obtain 65 (L/min):
    - While watching the test device press confirm.
    - After 2 seconds, Set Flow to 0 (L/min) and press confirm to stop the gas flow.
    - The minimum test device reading observed must be greater than:

    (60) DIN 221 kPa (32 psi)

    (50) Pin Indexed 207 kPa (30 psi)

    Repeat this step three times.

    If the test device reading under "high flow" conditions is less than specified, readjust the regulator per the procedure in Section 5.1.3; however, set the regulated pressure higher by the difference you noted in this step plus 7 kPa (1 psi). This adjusts the "low flow" regulated output to the high side of the specification so that the "high flow" regulated pressure can fall within the specification.

    If the regulator subsequently fails the "low flow" specification (step 4) because the reading is too high, replace the cylinder supply.
11. Set the system switch to Standby.
12. Close the cylinder valve.
13. Bleed the system of all pressure.
14. Disconnect the test device and plug the test port (pull on the plug to ensure it is locked in the fitting).
15. Replace the bellows assembly.
16. Replace the rear panel(s).
17. Perform the checkout procedure (Section 3).

Test B **For all gases not used to supply drive gas to the ventilator:**

Under low flow conditions, the output pressure of a properly adjusted/functioning regulator should fall within specifications listed in step 4. Under high flow conditions, the output pressure should not drop below the specifications in step 7.

1. If the cylinder supply being tested is N_2O, connect a source of O_2 and set the O_2 flow control to the minimum stop (pilot pressure for secondary regulator).
2. Slowly open the cylinder valve for the regulator being tested.
3. Set the system switch to On.

4. **Low Flow Test:** Set the flow of the gas being tested to 0.05 L/min (or minimum flow for O_2). When checking a regulator on systems that have a single flowtube, open the needle valve 1/8 turn from the minimum stop to achieve a flow close to 0.05 L/min.
   - Close the cylinder valve and allow the pressure to decay to 2068 kPa (300 psi) as indicated on the cylinder gauge (upper limit of the red band). The flow may be temporarily increased to facilitate the decay.
   - At the time that the cylinder pressure reaches 2068 kPa (300 psi), set the system switch to Standby.
   - Within one minute, the test device must stabilize between:

     (60) DIN 372–400 kPa (54–58 psi)

     (50) Pin Indexed 310–341 kPa (45.0–49.5 psi).

     - If the test device pressure does not stabilize within one minute, replace the cylinder supply.
     - If the test device stabilizes within one minute, but the readings are not within specifications, readjust the regulator (Section 5.1.3).
5. Slowly open the cylinder valve.
6. Set the system switch to On.
7. **High Flow Test:** Set the flow control valve to the maximum indicated flow on the flow tube.
   - The test device reading must be greater than:

     (60) DIN 221 kPa (32 psi)

     (50) Pin Indexed 221 kPa (32 psi)

     - If the test device reading under "high flow" conditions is less than specified, readjust the regulator per the procedure in Section 5.1.3; however, set the regulated pressure higher by the difference you noted in this step plus 7 kPa (1 psi). This adjusts the "low flow" regulated output to the high side of the specification so that the "high flow" regulated pressure can fall within the specification.
     - If the regulator subsequently fails the "low flow" specification (step 4) because the reading is too high, replace the cylinder supply.
8. Set the system switch to Standby.
9. Close the cylinder valve.
10. Bleed the system of all pressure.
11. Disconnect the test device and plug the test port (pull on the plug to ensure it is locked in the fitting).
12. Replace the rear panel(s).
13. Perform the checkout procedure (Section 3).

5.1.3 Adjusting Primary Regulators

Important: Cylinder supplies in an Aespire machine must have all primary regulators set to the same pressure range: (50) Pin Indexed or (60) DIN. If a regulator is replaced, the replacement regulator must be set (as required) to the same specification as the one removed.

Important: Install a full cylinder in the cylinder supply to be adjusted. It is essential that the cylinder be within 10% of its full pressure.

If the cylinder supply being adjusted is N_2O, connect a source of O_2 and set the O_2 flow control to the minimum stop (pilot pressure for secondary regulator).

To adjust the primary regulators, follow the procedure in Section 5.1.1 to gain access to the regulators.

Do not attempt to adjust without flow.

1. Slowly open the cylinder valve.
2. Set the system switch to On.
3. Set and maintain the fresh gas flow of the gas being tested to 0.05 L/min (or minimum flow for O_2). When adjusting a regulator on systems that have a single flowtube, open the needle valve 1/8 turn from the minimum stop to achieve a flow close to 0.05 L/min.

4. Close the cylinder valve and allow the pressure to decay to 2068 kPa (300 psi) as indicated on the cylinder gauge (upper limit of the red band). The flow may be temporarily increased to facilitate the decay.
5. When the cylinder gauge reaches the upper limit of the red band, adjust the regulator output pressure to:

   (60) DIN 386–400 kPa (56–58 psi)

   (50) Pin Indexed 327–341 kPa (47.5–49.5 psi).

   Note: It may be necessary to open the cylinder valve and repeat steps 4 and 5 a number of times to achieve the above setting.
6. Test the regulator settings per the appropriate test in Section 5.1.2:
   - **Test A —** For primary regulators that supply drive gas to the ventilator.
   - **Test B —** For all gases not used to supply drive gas to the ventilator.

5.2 Secondary Regulators

⚠ WARNING When testing N_2O regulators, nitrous oxide flows through the system. Use a safe and approved procedure to collect and remove it.

5.2.1 Testing/Adjusting Secondary Regulators or Balance Regulators

1. Set the system switch to Standby.
2. Remove the flowmeter panel shield (Section 9.8.1).
3. Remove the plug from the test port and connect a test device capable of measuring 689 kPa (100 psi) using 1/8-inch nylon tubing.

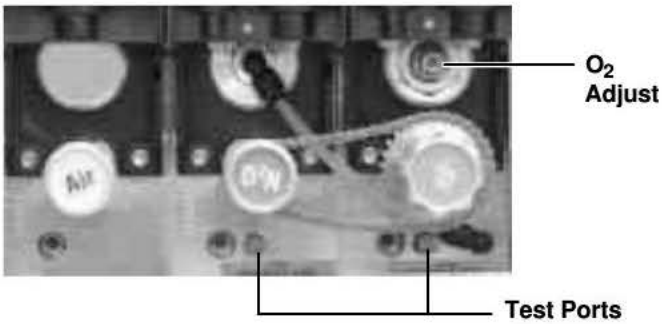

4. Set the flow of the tested gas and of O_2 as detailed in the chart.
5. Verify that the output of the tested regulator is within the range listed in the chart.

Regulator	Output	Flow Regulated gas	Flow O_2
O_2	207 ±7 kPa (30 ±1 psi)	2 L/min	---------
N_2O	± 14 kPa (±2 psi) of O_2 reading	10 L/min	4 L/min

6. If required, adjust the O_2 regulator to meet the above specifications. The N_2O regulator is not adjustable; replace if out of range.

   Note: The adjustment screw for these regulator is self-locking.
7. Disconnect the test device and plug the test port (pull on the plug to ensure it is locked in the fitting).
8. Perform the Flow Control Tests (Section 3.4).

5.3 Flowmeter Needle Valve Calibration

You need to calibrate a needle valve:

- if you install a new one,
- if minimum and maximum flows are not within specifications.

5.3.1 O_2 Needle Valve Calibration (Minimum Flow)

⚠ **CAUTION:** Do not force the needle valve against the seat. Overtightening the valve can cause the minimum flow setting to drift out of specifications.

1. Set the system switch to Standby.
2. Remove the flowmeter panel shield (Section 9.8.1).

   Note: If adjusting an existing needle valve,

   - remove the N_2O and O_2 knob and sprocket assemblies,
   - and loosen the O_2 stop collar setscrews.
3. Slide a stop collar onto the valve stem with the stop tab toward the valve. Do not tighten setscrews.

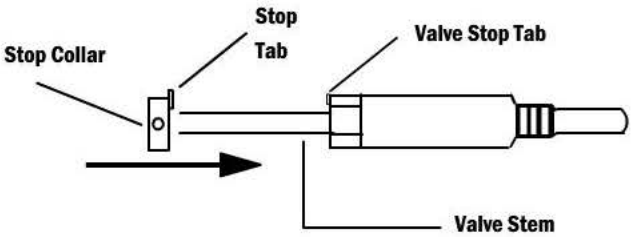

4. Set the system switch to On.
5. Adjust the O_2 needle valve to maintain a flow of
   - 50 ±25 mL/min for dual tube flowmeters.
   - 200 ±25 mL.min for single tube flowmeters.
6. Push the stop collar against the valve body.

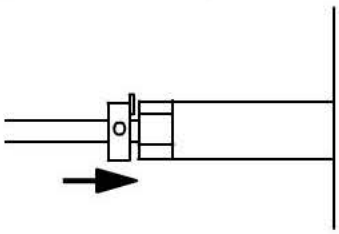

7. Turn the collar clockwise until the collar stop tab contacts the minimum stop tab on the valve body. *Do not turn the valve stem*.

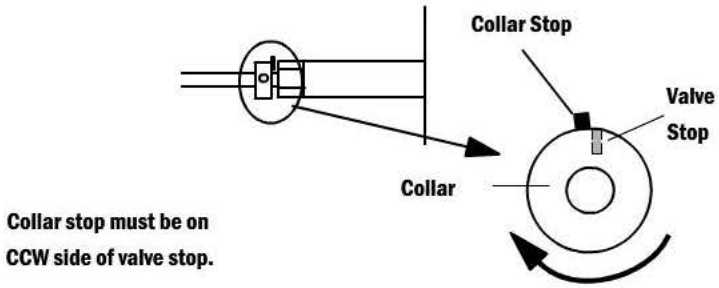

8. Carefully pull the collar back so there is a slight gap between collar and the valve body (but still engages the valve stop).

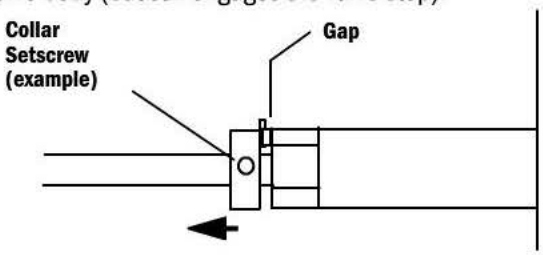

9. Tighten the collar setscrews. Start with the one opposite the tab if possible.
10. Turn the valve stem counterclockwise at least one revolution to make sure the collar tab clears the valve stop.

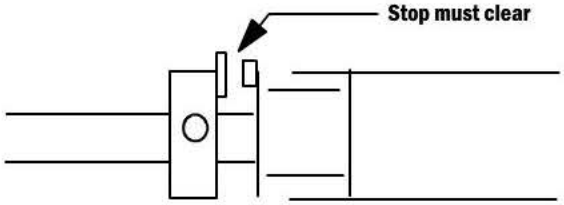

If the stop does not clear:

a. Turn the valve stem back to minimum position.
b. Loosen the collar setscrews.
c. Repeat steps 6 through 9.

11. Turn the valve stem clockwise to the minimum stop.
12. Verify that the flow is within the
    - 50 ±25 mL/min range for dual tube flowmeters.
    - 200 ±25 mL/min range for single tube flowmeters.
13. Calibrate the Link proportioning system (Section 5.4).

5.3.2 N_2O Needle Valve Calibration (Minimum Flow)

⚠ WARNING You must be in a well ventilated room or use a gas evacuation device at this time. Anesthetic vapors exhausted into the room air can be harmful to your health.

⚠ CAUTION: Do not force the needle valve against the seat. Overtightening the valve can cause the minimum flow setting to drift out of specifications.

1. Disconnect all pipeline supplies and close all cylinder valves.
2. Remove the upper rear panel.

   Note: If adjusting an existing needle valve,

   - remove the N_2O and O_2 knob and sprocket assemblies,
   - and loosen the O_2 stop collar setscrews.
3. Remove the flowmeter panel shield (Section 9.8.1).
4. Disconnect the tube from the pilot port on the N_2O regulator.

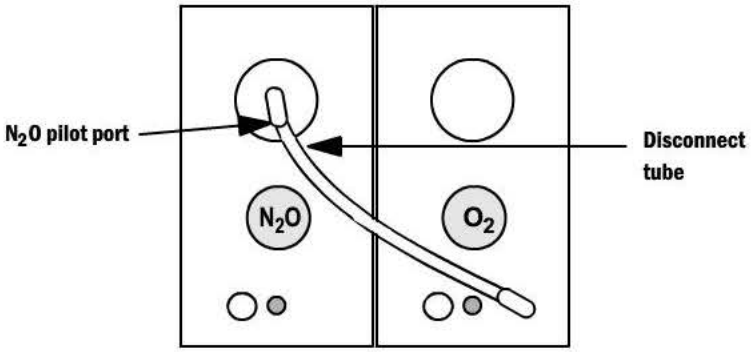

5. Disconnect the 4-mm outlet tube from the back of the N_2O pipeline manifold.

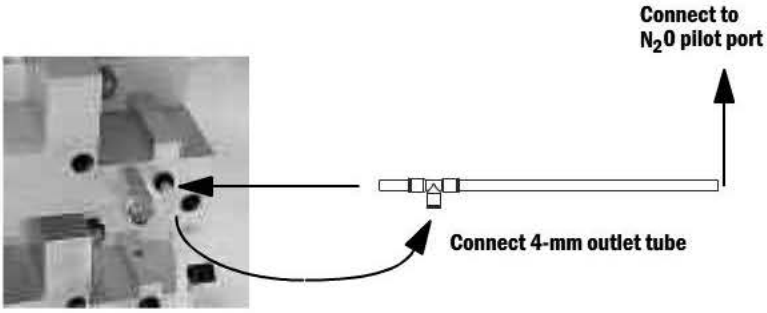

6. Using a 4-mm tube/tee fixture (see Service Tools - Section 10.1.2), connect a tube (tee end) to the N_2O supply outlet at the back of the pipeline manifold. Connect the outlet tube to the open connection on the tee connector of the fixture. Connect the other end of the fixture to the N_2O pilot port at the front of the flowhead. This setup supplies pilot pressure to the N_2O balancing regulator during the minimum stop calibration.

7. Slide a stop collar onto the valve stem with the stop tab toward the valve. Do not tighten setscrews.

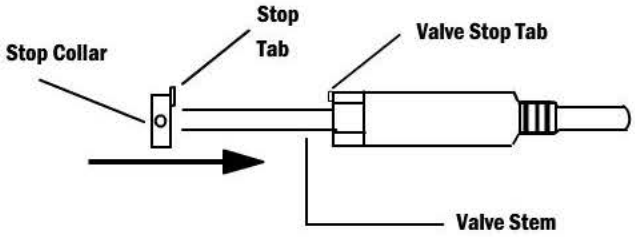

8. Connect either an N_2O pipeline or cylinder supply.
9. Slowly open the N_2O cylinder valve.

   Important: Do not connect the O_2 pipeline or open the O_2 cylinder valve.

10. Adjust the needle valve until the float is nearly touching the filter, but not quite.

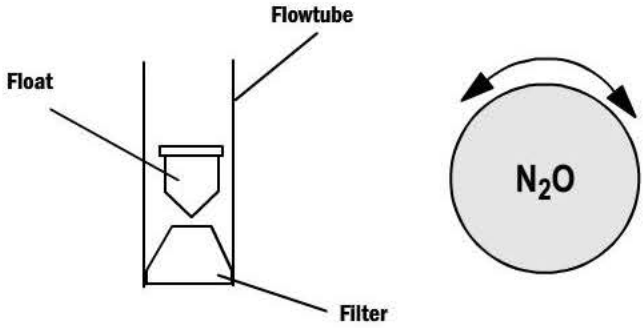

11. Disconnect the tubing from the inlet of the vaporizer manifold (closest to flowhead).
12. If the machine has an Air option, bleed down the air supply. Air can inflate the bubble (next step) if it is not shut off.
13. Apply a small amount of leak detection fluid (Snoop) to the end of the tube to form a bubble.
14. Turn the valve stem clockwise until the bubble no longer inflates. Do not turn more than 10 degrees clockwise past this point.

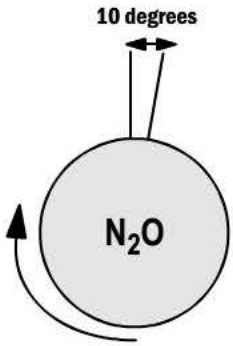

15. Push the stop collar against the valve body.

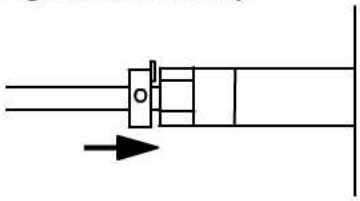

16. Turn the collar clockwise until the collar stop tab contacts the minimum stop tab on the valve body. *Do not turn the valve stem*.

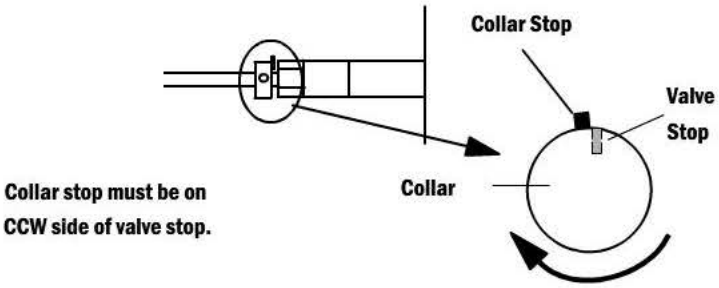

17. Carefully pull the collar back so there is a slight gap between collar and the valve body (but still engages the valve stop).

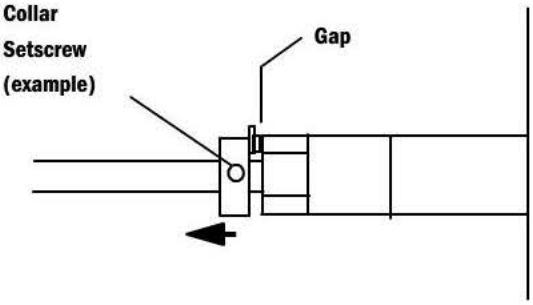

18. Tighten the collar setscrews. Start with the one opposite the tab if possible.

19. Turn the valve stem counterclockwise at least one revolution to make sure the collar tab clears the valve stop.

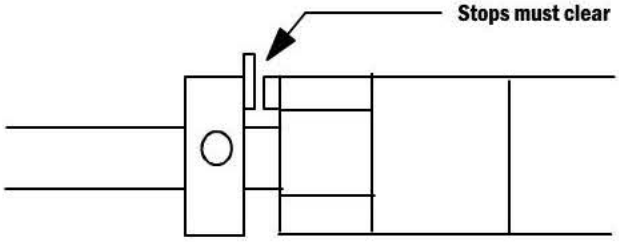

If the stops do not clear:

a. Turn the valve stem back to minimum position.

b. Loosen the collar setscrews.

c. Repeat steps 14 through17.

20. Turn the valve clockwise to the minimum stop.
21. Verify there is no flow at the end of the tube.
22. Thoroughly clean the end of the nylon tube and reconnect it to the vaporizer manifold inlet.
23. After calibrating minimum flow for N_2O:
    a. Close the cylinder valve and use the needle valve to bleed the remaining gas.
    b. Remove the test fixture connecting the N_2O gas supply to pressure balance regulator pilot port.
    c. Reconnect the pilot tube to the N_2O pilot port. Pull on the tubing to ensure it is locked into the fitting.

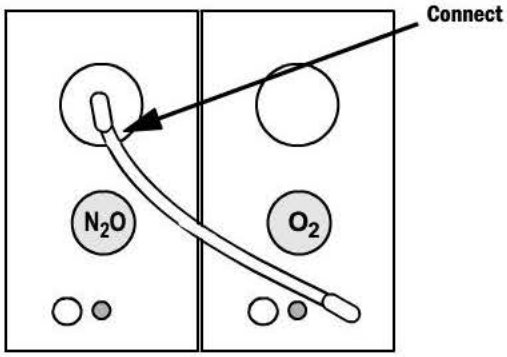

    d. Reconnect the outlet tube to the N_2O pipeline supply manifold.
24. Calibrate the Link proportioning system (Section 5.4).

5.3.3 Air Needle Valve Calibration (Minimum Flow)

⚠ **CAUTION:** Do not force the needle valve against the seat. Overtightening the valve can cause the minimum flow setting to drift out of specifications.

1. Set the system switch to Standby.
2. Disconnect all pipeline hoses and close all cylinder valves except for air.
3. Remove the flowmeter panel shield (Section 9.8.1).
4. Remove the upper rear panel.

   Note: If adjusting an existing needle valve,

   - remove the Air knob,
   - and loosen the Air stop collar setscrews.
5. Slide a stop collar onto the valve stem with the stop tab toward the valve. Do not tighten setscrews.

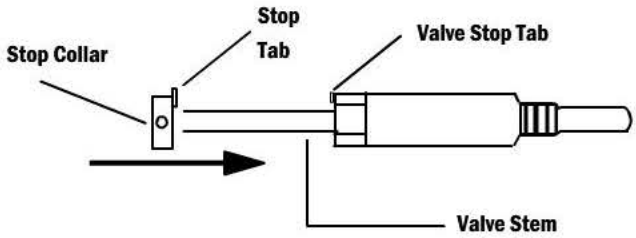

6. Set the system switch to On.
7. Adjust the needle valve until the float is nearly touching the filter, but not quite.

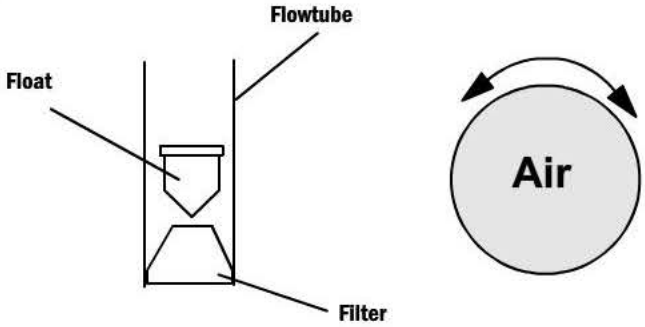

8. Disconnect the tubing from the inlet to the vaporizer manifold (left end of manifold).
9. Apply a small amount of leak detection fluid (Snoop) to the end of the tube to form a bubble.

10. Turn the needle valve clockwise until the bubble no longer inflates. Do not turn more than 10 degrees clockwise past this point.

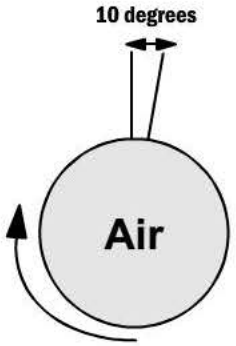

11. Push the stop collar against the valve body.

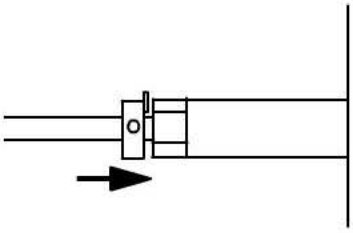

12. Turn the collar clockwise until the collar stop tab contacts the minimum stop tab on the valve body. ***Do not turn the valve stem***.

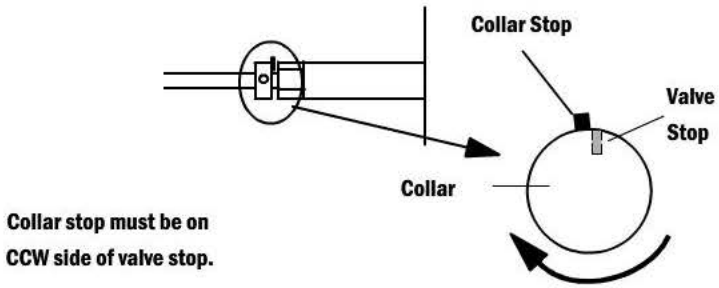

13. Carefully pull the collar back so there is a slight gap between collar and the valve body (but still engages the valve stop).

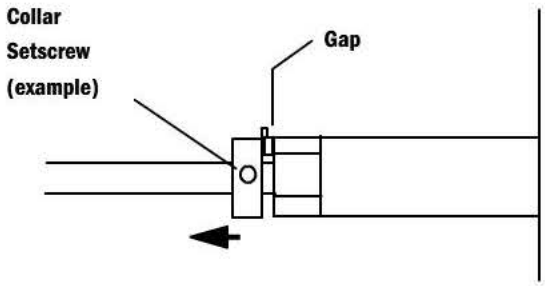

14. Tighten the collar setscrews. Start with the one opposite the tab if possible.
15. Turn the valve stem counterclockwise at least one revolution to make sure the collar tab clears the valve stop.

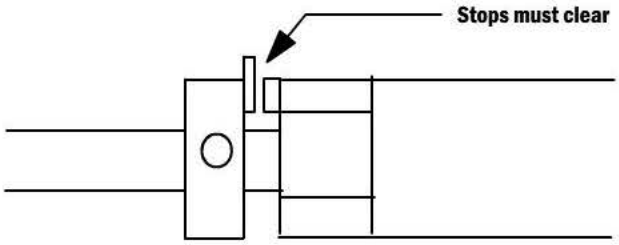

If stops do not clear:

a. Turn the valve stem back to minimum position.
b. Loosen the collar setscrews.
c. Repeat steps 11 through 14.

16. Turn the valve stem clockwise to the minimum stop.
17. Verify there is no flow at the end of the tube.
18. Thoroughly clean the end of the nylon tube and reconnect it to the vaporizer manifold inlet.
19. Set the knob so that at minimum flow the label text is horizontal and the knob is on an even plane (front to back) with the N_2O and O_2 knobs.
20. Replace the flowmeter panel shield and the rear panel.

5.4 Link system calibration

Before you start, make sure that:

- All parts are correctly installed.
- Stops on needle valves are set correctly.
- The machine meets leak check requirements.
- Confirm that the O_2 sensor measures 21% in room air and 100% in pure O_2. If not, calibrate the O_2 sensor.

Note: All illustrations in this section show ANSI flowmeter module positions. The order is reversed on ISO machines.

⚠ WARNING You must be in a well ventilated room or use a gas evacuation device at this time. Anesthetic vapors exhausted into the room air can be harmful to your health.

1. Set the system switch to Standby.
2. Remove the flowmeter panel shield (Section 9.8.1).
3. Put the plastic spacer on the N_2O needle valve spindle.
4. Turn the O_2 and the N_2O needle valves clockwise to their minimum stop position.

5. Put the chain onto the O_2 knob/sprocket assembly and the N_2O sprocket.

   Note: The N_2O sprocket set screws should be away from the valve.

6. Install the chain and sprockets onto the needle valve stems as an assembly. Press the O_2 knob/sprocket against the O_2 minimum stop collar.

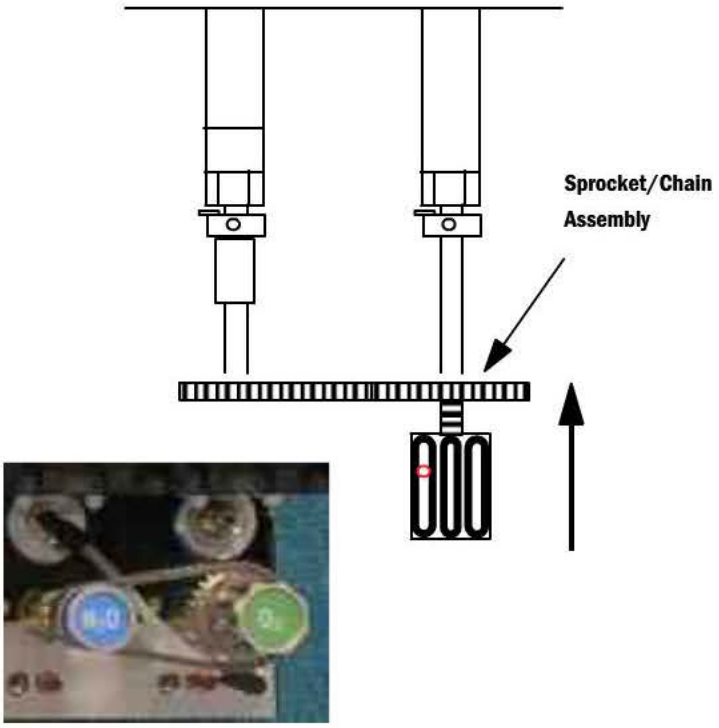

7. Tighten the setscrews in the O_2 knob. Do not tighten the N_2O sprocket setscrews.

   Note: If O_2 label is on the knob, turn the knob so that the identification label is horizontal before tightening the setscrews.

8. Turn on the O_2 and the N_2O gas supplies (pipeline or cylinder).
9. Set the system switch to On.
10. Adjust the needle valves:
    - **O_2 needle valve:** 200 ±10 mL/min.
    - **N_2O needle valve:** 600 ±25 mL/min.

11. Turn the sprocket on the O_2 knob sprocket assembly counterclockwise until it stops against the tab on the O_2 knob. Do not allow the N_2O or O_2 valve stems to rotate.

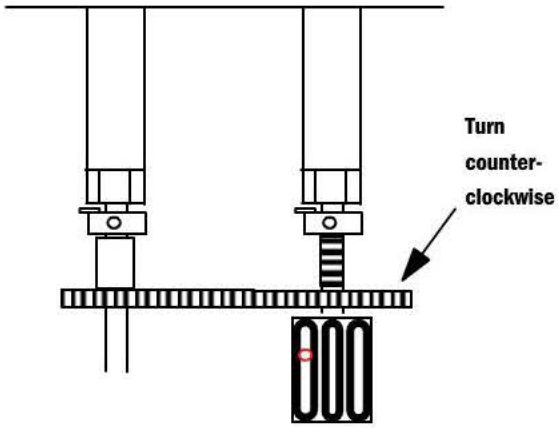

12. Push the N_2O sprocket against the plastic spacer.

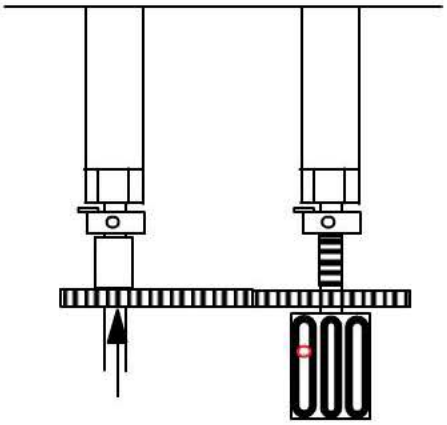

13. Holding the O_2 knob, rotate the N_2O sprocket counterclockwise until all slack is removed from the chain.
14. Lightly tighten both N_2O sprocket setscrews.
15. Turn the N_2O needle valve clockwise to the minimum stop position.

16. Install the N_2O knob. Turn the knob so that the identification label is horizontal before tightening the setscrews.

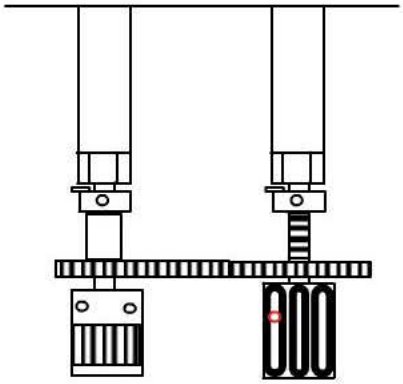

17. Turn the N_2O needle valve counterclockwise, and check that the oxygen flow increases as N_2O flow increases.
18. Turn the O_2 needle valve clockwise, and check that the N_2O flow decreases as O_2 decreases.
19. Check the proportioning system concentration (increasing N_2O flow). Observe the following precautions:
    - Start with both valves at the minimum setting.
    - Adjust only the N_2O needle valve.
    - Increase the N_2O flow as specified in the table below and make sure the O_2 concentration is in the allowed range.

    Note: Allow the O_2 monitor to stabilize. At the lower flows, the O_2 monitor may take up to 90 seconds to stabilize.

    - If you overshoot a setting, turn the O_2 needle valve clockwise until the N_2O flow decreases to the previous setting before continuing the test.

Set the N_2O flow (L/min)	Measured O_2
0.8	22% to 29%
1	22% to 29%
2	22% to 29%
6	22% to 29%
9	22% to 29%

20. Check the proportioning system concentration (decreasing O_2 flow). Observe the following precautions:

    - Turn the N_2O needle valve to the maximum setting.
    - Adjust only the O_2 needle valve.
    - Decrease the O_2 flow as specified in the table and make sure the O_2 concentration is in the allowed range.

    Note: Allow the O_2 monitor to stabilize. At the lower flows, the O_2 monitor may take up to 90 seconds to stabilize.

    - If you overshoot a setting, turn the N_2O needle valve counterclockwise until the O_2 flow increases to the previous setting before continuing the test.

Set the O_2 flow (L/min)	Measured O_2
3	22% to 29%
2	22% to 29%
1	22% to 29%
0.3	22% to 29%

If both tests meet the criteria, calibration is complete (go to the next step). If either test fails to meet the criteria, return to step 10 and adjust N_2O to a lower or higher setting.

If:	Then:
Concentration Low	Decrease N_2O
Concentration High	Increase N_2O

Note: Adjusting the regulator pressure is not recommended. It has little effect on proportioning. If you have difficulty proportioning the system, you may need to replace either or both needle valves.

21. Tighten N_2O sprocket setscrews.
22. Set the system switch to Standby.
23. Turn off the O_2 and the N_2O gas supplies.
24. Check that all setscrews are tight.
25. Adjust all needle valves to minimum stop position.
26. Install flowmeter panel shield.

5.5 Airway pressure gauge

5.5.1 Zero the pressure gauge

1. Attach a patient circuit to the Breathing System. Leave the patient end open.
2. Set the Bag/Vent switch to Bag.
3. Adjust the APL valve to maximum.
4. Remove the lens from the pressure gauge:
   - Apply a slight pressure with your thumb and finger tips around the outer edge of the lens.
   - Turn the lens counterclockwise to remove it.
5. Adjust the pressure gauge to zero.
6. Plug the patient circuit.
7. Press and release the O_2 flush button to sweep the needle across the pressure gauge.
8. Remove the plug from the patient circuit to relieve the pressure in the circuit and recheck the zero setting of the pressure gauge.
9. If required, repeat zero and span procedure.
10. Replace the lens cover.

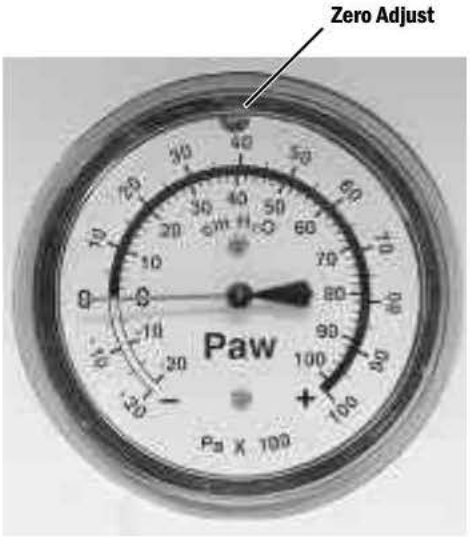

5.5.2 Checking the pressure gauge accuracy

The accuracy of the airway pressure gauge can be checked by using the following:

- a low-pressure test device (digital manometer or test gauge) with an accuracy of ±2% of reading,
- a low-pressure supply source (typically a syringe),
- and an airway pressure gauge test adapter.

1. Ensure that the pressure gauge is zeroed (Section 5.5.1).
2. Remove the upper rear panel.
3. Remove the existing tube from the back of the pressure gauge and connect the test adapter tube directly to the gauge.
4. Connect a low-pressure supply source (syringe) to one of the open tubes of the test adapter.
5. Connect a low-pressure test device to the remaining open tube of the test adapter.
6. Adjust the pressure source to the following pressures as read on the airway pressure gauge. The test device gauge should read within the values indicated.

Airway Pressure Gauge	Test Device
0 cm H_2O	0 ±1 cm H_2O
40 cm H_2O	40 ±2 cm H_2O
-5 cm H_2O	-5 ±2 cm H_2O

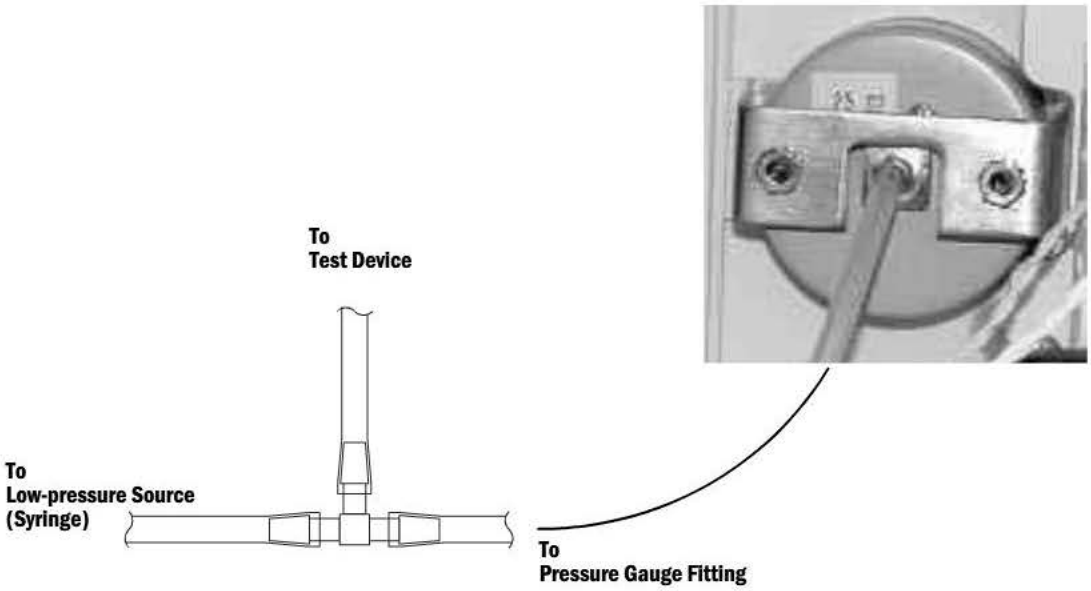

6 Installation and Maintenance

In this section

6.1 Aespire 7900 Installation Checklist 6-2

6.2 Aespire 7900 Planned Maintenance 6-4

6.2.1 Every twelve (12) months 6-4

6.2.2 Every twenty-four (24) months 6-5

6.3 Free breathing valve maintenance 6-6

6.4 MOPV pressure relief valve test 6-7

6.4.1 Test setup 6-7

6.4.2 Test procedure 6-7

6.5 Auxiliary O2 flowmeter tests 6-8

6.6 Integrated Suction Regulator tests 6-9

⚠ **WARNINGS**

Do not perform testing or maintenance on the Aespire Anesthesia Machine while it is being used on a patient. Possible injury can result.

Items can be contaminated due to infectious patients. Wear sterile rubber gloves. Contamination can spread to you and others.

Obey infection control and safety procedures. Used equipment may contain blood and body fluids.

6.1 Aespire 7900 Installation Checklist

Serial Number:	Date: (YY/MM/DD) / /
Hospital:	Performed by:

☐ 1. Unpack and assemble the Aespire 7900 System.

☐ 2. Reconfigure the sample gas return line as required (*Section 9.12*).

3. Enter the Service Mode and select System Configuration from the menu (*Section 4.3.3*). Perform the following steps:

☐ a. Enter the site altitude in increments of 100 meters.

☐ b. Select the correct ventilator drive gas (O_2 or Air).

☐ c. Make sure Heliox Mode is set to "Off". Aespire 7900 machines cannot be configured to deliver Heliox.

☐ d. Select the desired V_E Alarm Limits (Automatic or User Adjustable).

☐ e. Change the language selected if necessary.

☐ 4. Return to the Service Modes menu and select User Select Defaults (*Section 4.3.4*). This menu determines the control settings used by the system at power up. Configure these settings as desired by the customer.

5. Return to the Service Modes menu and perform the following calibrations:

☐ a. Adjust Drive Gas Regulator (*Section 4.3.18*).

☐ b. O2 Calibrations (*Section 4.3.19*).

☐ c. Calibrate Flow Sensors. This step will zero flow and airway sensors. (*Section 4.3.20*).

☐ d. Pressure Sensitivity (*Section 4.3.21*).

☐ e. Calibrate Flow Valve (*Section 4.3.22*).

☐ f. Bleed Resistor Calibration (*Section 4.3.23*).

☐ 6. Exit the Service Mode and go to Normal Operations. Verify the "Service Calibration" message is not present in the normal system display.

7. Complete the System Checkout by performing the following steps:

- ☐ a. Inspect the system (*Section 3.2*).
- ☐ b. Pipeline and cylinder tests (*Section 3.3*).
- ☐ c. Flow control tests (*Section 3.4*).
- ☐ d. Pressure relief test (*Section 3.5*).
- ☐ e. O_2 supply alarm test (*Section 3.6*).
- ☐ f. Flush flow test (*Section 3.7*).
- ☐ g. Vaporizer back pressure test (*Section 3.8*).
- ☐ h. Low-pressure leak test (*Section 3.9*).
- ☐ i. Alarm tests (*Section 3.10*).
- ☐ j. Breathing systems tests (*Section 3.11*).
- ☐ k. Auxiliary O2 flowmeter tests, if equipped with this option (*Section 3.12*).
- ☐ l. Integrated suction regulator tests, if equipped with this option (*Section 3.13*).
- ☐ m. Power failure test (*Section 3.14*).
- ☐ n. Electrical safety tests (*Section 3.15*).

6.2 Aespire 7900 Planned Maintenance

Serial Number:	Date: (YY/MM/DD) / /
Hospital:	Performed by:
☐ 12 months ☐ 24 month	☐ _____

This section covers the regular maintenance procedures (minimum requirements) needed to make sure that the Aespire 7900 anesthesia machine — including the ventilator — operates to specifications.

6.2.1 Every twelve (12) months

Perform the following steps every 12 months.

Parts Replacement

☐ Replace the vaporizer port o-rings (*Section 9.9.1*)
(Kit Stock Number 1102-3016-000)

Checks and Tests

Refer to the Aespire 7900 User's Reference Manual, Part 2.
Perform the following steps:

☐ 1. User maintenance listed below. Including disassembly, inspection, cleaning and parts replacement as required (*Section 3 and Section 2*).

- AGSS Maintenance:
  Empty any condensate from the reservoir (disposable item).
  Inspect air brake for occlusion.
  Inspect, clean or replace filter on active AGSS.
- Breathing Circuit Maintenance
- Bellows Assembly Maintenance
- Bellows Assembly Tests
- O_2 Sensor Calibration
- Flow Sensor Calibration

Refer to listed sections in this manual.
Perform the following steps:

☐ 2. Perform the MOPV pressure relief valve test (*Section 6.4*).

☐ 3. From the Service Mode menu, perform the following:

- Error Log (*Section 4.3.2*).
  If any error codes have been logged, follow the appropriate troubleshooting procedures. Clear the error log.
- Display Discrete I/O Signals (*Section 4.3.14*).
  Verify proper operation of all switches.
- Adjust Drive Gas Regulator (*Section 4.3.18*)
- Test Gas Inlet Valve (*Section 4.3.7*)
- Test Flow Valve (*Section 4.3.8*)
- Test Pressure Limit Switch (*Section 4.3.9*)
- Calibrate Pressure Sensitivity (*Section 4.3.21*)
- Calibrate Flow Valve (*Section 4.3.22*)
- Calibrate Bleed Resistor (*Section 4.3.23*)

☐ 4. Inspect the system (*Section 3.2*)

☐ 5. Pipeline and cylinder tests (*Section 3.3*)

☐ 6. Flow control (*Section 3.4*)

☐ 7. Pressure relief tests (*Section 3.5*)

☐ 8. O_2 supply alarm test (*Section 3.6*)

☐ 9. Flush flow test (*Section 3.7*)

☐ 10. Vaporizer back pressure test (*Section 3.8*)

☐ 11. Low-pressure leak test (*Section 3.9*)

☐ 12. Airway pressure gauge accuracy check (*Section 5.5.2*)

☐ 13. Alarm tests (*Section 3.10*)

☐ 14. Breathing systems tests (*Section 3.11*)

☐ 15. Auxiliary O_2 flowmeter tests, if equipped with option (*Section 6.5*)

☐ 16. Integrated suction regulator tests, if equipped with option (*Section 6.6*)

☐ 17. Power failure test (*Section 3.14*)

☐ 18. Electrical safety tests (*Section 3.15*)

6.2.2 Every twenty-four (24) months

In addition to the 12-month requirements, replace the following parts every 24 months. All machine and ventilator parts should be replaced before performing the checks, tests, and calibrations.

☐ 1. Replace the internal backup battery (*Section 9.23.4*) (Stock Number 1503-3045-000).

☐ 2. Replace the free breathing flapper valve (*Section 6.3*) (Stock Number 0211-1454-100).

☐ 3. Replace the free breathing valve o-ring (*Section 6.3*) (Stock Number 1503-3208-000).

6.3 Free breathing valve maintenance

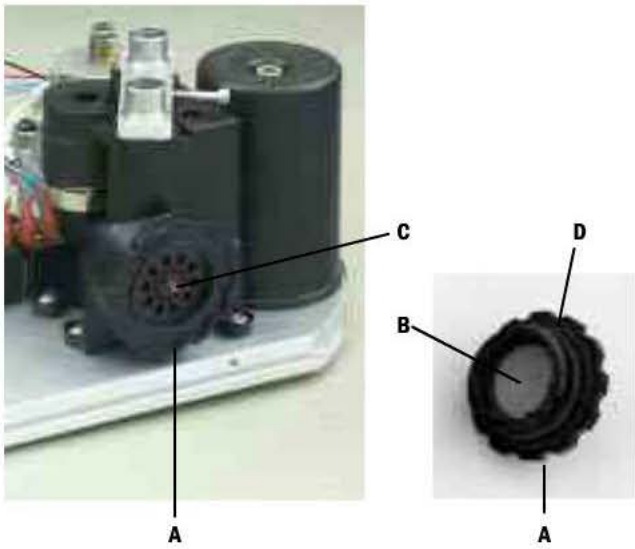

To replace the flapper valve

1. Unscrew the valve seat (**A**) from the side of the interface manifold.
2. Inspect the flapper (**B**) and valve seat for nicks, debris and cleanliness.
3. If necessary, clean the new flapper valve with alcohol.
4. Pull the tail (**C**) of the new free breathing valve flapper through the center of the valve seat until it locks in place.
5. Trim the tail flush with outside surface of the valve seat (refer to the removed flapper).
6. Replace the O-ring (**D**). Lubricate with a thin film of Krytox.
7. Hand screw the assembly into the interface manifold.
8. Reassemble the system.
9. Perform the Preoperative Checkout Procedure (refer to the User's Reference manual).

6.4 MOPV pressure relief valve test

⚠ **WARNING** Objects in the breathing system can stop gas flow to the patient. This can cause injury or death:

- Do not use a test plug that is small enough to fall into the breathing system.
- Make sure that there are no test plugs or other objects caught in the breathing system.

6.4.1 Test setup

1. Remove the ABS breathing system.
2. Plug the inspiratory flow (drive pressure) port of the exhalation valve with a stopper.

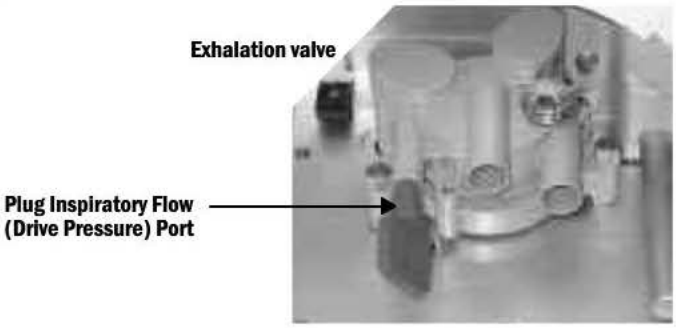

6.4.2 Test procedure

1. Set the system switch to On and enter the Service Mode.
2. Select “Flow Valve Test Tool”.
3. Set Bag/Vent switch to Vent.
4. Select “Set Flow Valve”.
5. Set flow of 10 L/min.
6. Carefully listen for the MOPV relief weight to be relieving and “popping off” from its seat (a purring sound). This indicates the valve is functioning correctly.
7. Set the system switch to Standby.
8. Remove the stopper from the inspiratory flow port.
9. Reassemble the system.
10. Perform the Preoperative Checkout Procedure (refer to the User’s Reference manual).

6.5 Auxiliary O_2 flowmeter tests

1. Open the O_2 cylinder valve or connect an O_2 pipeline.
2. Rotate the flow control clockwise (decrease) to shut off the flow. The ball should rest at the bottom of the flow tube and not move.
3. Rotate the flow control counterclockwise (increase). The ball should rise immediately after rotation is begun. It should rise smoothly and steadily with continued counterclockwise rotation. When a desired flow is set, the ball should maintain in a steady position.
4. Rotate the flow control clockwise to shut off the flow.

Flow Accuracy Test

Note: To check flow accuracy, be sure that the flow test device is capable of measuring 0 to 15 L/min with an accuracy of ±2% of reading.

1. Connect the flowmeter outlet to the flow test device.
2. Adjust the flowmeter so the **center** of the ball aligns with the selected test point (observe that the ball maintains a steady position for 10 seconds).
3. The test device reading should be between the limits shown for each of the selected settings in the table below.

	Flow Tester Reading	
Flowmeter Setting L/min	**Lower Limit L/min**	**Upper Limit L/min**
1	0.52	1.48
3	2.56	3.44
5	4.60	5.40
10	9.70	10.30
maximum (valve fully open)	12.00	-------

4. Rotate the flow control clockwise to shut off the flow.
5. Close the O_2 cylinder valve or disconnect the O_2 pipeline.

6.6 Integrated Suction Regulator tests

Note There are two types of integrated suction systems for the Avance anesthesia machine:

- Continuous Vacuum Regulator, Three-Mode, Pipeline Vacuum
- Continuous Vacuum Regulator, Three-Mode, Venturi Derived Vacuum

For Pipeline Vacuum systems,
a vacuum source of at least 500 mm Hg (67 kPa or 20 in Hg) is required for testing. The supply open flow must be a minimum of 50 L/min.

For Venturi Derived Vacuum systems,
an O_2 or Air source of at least 282 kPa (41 psi) is required for testing.

Gauge Accuracy The gauge needle should come to rest within the zero range bracket when no suction is being supplied. Gauges which do not comply may be out of tolerance.

Note To check gauge accuracy, be sure that the test gauge is capable of measuring 0 to 550 mm Hg with an accuracy of ±1% of reading.

1. Connect the suction patient port to the test gauge.
2. Turn the mode selector switch to I (ON).
3. Ensure that the vacuum test gauge is in agreement with the suction vacuum gauge ± 38 mm Hg/5 kPa at the following test points.

Test points

Suction vacuum gauge	Test gauge tolerance
100 mm Hg (13.3 kPa)	62–138 mm Hg (8.3–18.4 kPa)
300 mm Hg (40 kPa)	262–338 mm Hg (35–45 kPa)
500 mm Hg (66.7 kPa)	462-538 mm Hg (61.6–71.7) kPa)

Flow Test **Note:** To check flow accuracy, be sure that the flow test device is capable of measuring 0–30 L/min.

1. Connect the patient port of the suction regulator to the flow test device.
2. Rotate the suction control knob fully clockwise (increase).
3. Turn the mode selector switch to I (ON) and verify that the flow rate is:
   - at least 20 L/min.
4. Disconnect the test flowmeter.

(Tests continue on next page.)

Regulation Test

1. Turn the mode selector switch to I (ON).
2. Occlude the patient port of the suction regulator.
3. Set the vacuum regulator gauge to 100 mm Hg/13 kPa.
4. Open and close the patient port several times.
5. With the patient port occluded, the gauge should return to 100 mm Hg/13 kPa within a tolerance of ± 10 mm Hg/1.3 kPa.

Vacuum Bleed Test

1. Occlude the patient port of the suction regulator.
2. Set the vacuum regulator gauge to 100 mm Hg/13 kPa.
3. Turn the mode selector switch to O (OFF) and observe the gauge needle. It must return to the zero range bracket or stop pin within 10 seconds.

Vacuum Leak Test

1. Turn the mode selector switch to O (OFF).
2. Rotate the suction control knob a minimum of two full turns in the clockwise direction (increase suction) to ensure its setting is not at the off position.
3. Occlude the patient port of the suction regulator.
4. Observe the suction gauge, the needle should not move.
5. Rotate the suction control knob fully counterclockwise to ensure its setting is at the fully off position.
6. Turn the mode selector switch to I (ON).
7. Observe the suction gauge, the needle should not move.

7 Troubleshooting

In this section

7.1 General Troubleshooting 7-2

7.2 Breathing System Leak Test Guide 7-4

7.2.1 Breathing system leak test 7-5

7.2.2 Breathing System Troubleshooting Flowcharts 7-7

7.2.3 Leak Isolation Tests 7-12

7.3 Ventilator Troubleshooting instructions 7-27

7.4 System Error Log 7-28

7.5 Alarm messages 7-29

7.6 Mechanical/electrical troubleshooting guide 7-42

7.7 Troubleshooting Flowcharts 7-44

7.7.1 Ventilator assessment process 7-44

7.7.2 No display troubleshooting. 7-45

7.7.3 Inaccurate volume ventilation troubleshooting. 7-46

7.7.4 No ventilation troubleshooting. 7-47

7.7.5 High intrinsic PEEP troubleshooting. 7-48

7.8 Power supply test points 7-49

7.1 General Troubleshooting

⚠ **WARNING** Objects in the breathing system can stop gas flow to the patient. This can cause injury or death:

- Do not use a test plug that is small enough to fall into the breathing system.
- Make sure that there are no test plugs or other objects caught in the breathing system.

Problem	Possible Cause	Action
High Pressure Leak	Pipeline leak	Use a leak detector or Snoop to check for source of leak. Repair or replace defective parts.
	O_2 flush valve	Use a leak detector or Snoop to check for source of leak. Make sure tubing connections are tight. Replace valve if defective.
	System switch	Use a leak detector or Snoop to check for source of leak. Make sure tubing connections are tight. Replace switch if defective.
	Cylinder not installed properly	Make sure cylinder is correctly aligned. Verify that tee handles are tight.
	Cylinder gauges	Use a leak detector or Snoop to check for source of leak. Replace gauge if defective.
	Cylinder gaskets	Use a leak detector or Snoop to check for source of leak. Replace gasket if defective.
	Relief valves	Use a leak detector or Snoop to check for source of leak. Replace valve if defective.
Low Pressure Leak (with vaporizer mounted)	Vaporizer not installed properly	Reseat vaporizer if not installed properly. Have vaporizer serviced at vaporizer center if vaporizer leaks.
	Missing or damaged o-ring on vaporizer manifold	Check condition of o-ring. Replace if missing or damaged.
	Loose fill port	Check fill port. Tighten if loose.

Problem	Possible Cause	Action
Low Pressure Leak (with or without vaporizer)	Leaking port valve on vaporizer manifold	Use the Vaporizer Manifold Valve Tester to check for leak. See Section 9.9.2 for instructions. If test fails, tighten, repair, or replace as needed.
	Leak at flowmeter head	If vaporizer manifold passed previous tests: Remove tubing from input side of head and occlude port. Perform leak test. If test fails: ▪ Check for damaged o-rings between flowmeter modules. Replace as needed. ▪ Check for damaged o-rings at top and bottom of flow tubes. Replace as needed. ▪ Check for cracked flow tube. Replace as needed.
		If secondary regulator leaks, replace the complete module.
		Note: An alternate method is to pressurize the system and use a leak detector or Snoop to check for source of leak.
	Leaking relief valve on vaporizer manifold	Remove relief valve. Occlude opening. Perform leak test. If test passes, replace valve.
	Leaking flush valve	Attach pressure measuring device on CGO. Replace valve if device shows increased pressure.
	Leaking system switch	Attach pressure measuring device on CGO. Replace switch if device shows increased pressure.
Bellows leak	Pop-off valve diaphragm not sealing properly	Disassemble pop-off valve; inspect and clean seats; reseat; reassemble.
	Bellows mounting rim loose	Remove rim and pop-off valve diaphragm; reseat diaphragm; snap rim (2) into place.
	Bellows improperly mounted or has a hole or tear	Check that only the last bellows convolute is mounted to the rim and that the ring roll is in the groove under the rim. Inspect the bellows for damage; replace.
Breathing System Leak	Absorber canister not installed properly	Install canister properly.
	Soda lime dust on canister seals	Clean seals and mating surfaces.
Breathing System Leak (Intermittent)	ACGO O_2 sense check valve	Replace.
N_2O flow does not decrease with O_2 flow	Defective pilot regulator	Check pilot regulator. Replace if needed.
Unit displays low O_2 pressure with pipeline but not with cylinders	Low O_2 supply switch	Check switch. Calibrate or replace as appropriate.
Unable to begin mechanical ventilation	ABS not fully engaged	Remount ABS.
	No O_2 supply	Check O_2 supply.
	Defective Bag/Vent switch	Check Bag/Vent switch.

7.2 Breathing System Leak Test Guide

Note Always perform the low-pressure leak test (Section 3.9) on the machine before proceeding with these breathing system leak tests.

The procedure in Section 7.2.1 helps you isolate the leak: to Bag Mode components, to Vent Mode components, or to components that are common to both modes.

- If you have a similar leak in both the bag mode and the ventilator mode, you must consider the Flow Sensor Module, the Circuit Module, the Absorber Canister area, and the bulkhead components (including CGO tubing). Carefully inspect the circuit module for damaged seals or misassembly, and the seating of the O_2 sensor.
- If you have a larger leak in one area than the other (Vent or Bag), the leak is most likely NOT in the Flow Sensor Module, the Circuit Module, the Absorber Canister area, or the bulkhead ports.

Follow the troubleshooting flowcharts in Section 7.2.2 to determine the best sequence of tests for locating a breathing system leak.

The procedures in Section 7.2.3 test specific components of the breathing system for leaks.

⚠ WARNING Objects in the breathing system can stop gas flow to the patient. This can cause injury or death:

- Do not use a test plug that is small enough to fall into the breathing system.
- Make sure that there are no test plugs or other objects caught in the breathing system.

7.2.1 Breathing system leak test

This test checks for leaks in Vent Mode and Bag Mode components. It is part of the overall checkout procedure, Section 3.11 "Breathing system tests." It is repeated here for testing convenience.

⚠ WARNING

Objects in the breathing system can stop gas flow to the patient. This can cause injury or death:

- Do not use a test plug that is small enough to fall into the breathing system.

1. Verify that AGSS is operating. For systems that have a flow indicator on the side, make sure that the flow indicator shows a flow in the green (normal) region.
2. Zero the pressure gauge (Section 5.5.1).

Check Valves

3. Make sure that the check valves on the breathing circuit module work correctly:
   a. The Inspiratory check valve rises during inspiration and falls at the start of expiration.
   b. The Expiratory check valve rises during expiration and falls at the start of inspiration.

Ventilator Bellows

4. Ventilator bellows test:
   a. Set the system switch to Standby.
   b. Set the Bag/Vent switch to Ventilator.
   c. Set all flow controls to minimum.
   d. Close the breathing circuit at the patient connection. Use the test plug located on the side of the ABS.
   e. Push the O_2 flush button to fill the bellows.
   f. The pressure must not increase to more than 15 cm H_2O on the pressure gauge.
   g. If the bellows falls more than 100 mL/min (top of indicator), it has a leak.

Service Mode Tests

5. Enter the Service Mode: Push and hold the adjustment knob on the ventilator's display and set the system switch to On.
   a. Select and confirm "Service Mode".
   b. Select and confirm "Breathing System Leak Test" (Section 4.3.12).
   c. Follow the instructions on the screen.
   d. The leak rate should be less than 200 mL/min.
   For machines with a single-tube O_2 flowmeter, the pressure reading should reach 30 cm H_2O at minimum flows greater than 200 mL/min.

Bag Circuit

6. Test the Bag circuit for leaks:
   a. Set the system switch to On.
   b. Set the Bag/Ventilator switch to Bag.
   c. Plug the Bag port (use your hand or the approved test plug).
   d. Close the APL valve (70 cm H_2O).
   e. Set the O_2 flow to 0.25 L/min.
   f. Close the patient connection (using a hand or test plug on the side of the breathing system) and pressurize the bag circuit with the O_2 flush button to approximately 30 cm H_2O.
   g. Release the flush button. The pressure must not decrease. A pressure decrease large enough to see on the gauge indicates an unacceptable leak.

APL Valve

7. Test the APL valve:
   a. Fully close the APL valve (70 cm H_2O).
   b. Set the total fresh gas flow to approximately 3 L/min and make sure that the value on the inspiratory pressure gauge does not exceed 85 cm H_2O. Some pressure fluctuation is normal.
   c. Fully open the APL valve (to the MIN position).
   d. Set O_2 flow to 3 L/min. Turn any other gases off.
   e. Make sure that the value on the inspiratory pressure gauge is less than approximately 5 cm H_2O.
   f. Push the O_2 flush button. Make sure that the value on the inspiratory pressure gauge stays less than 10 cm H_2O.
   g. Set the O_2 flow to minimum and make sure that the value on the inspiratory pressure gauge does not decrease below 0 cm H_2O.
8. Remove your hand or the test plug from the patient connection.
9. Set the System switch to Standby.

⚠ WARNING Make sure that there are no test plugs or other objects caught in the breathing system.

7.2.2 Breathing System Troubleshooting Flowcharts

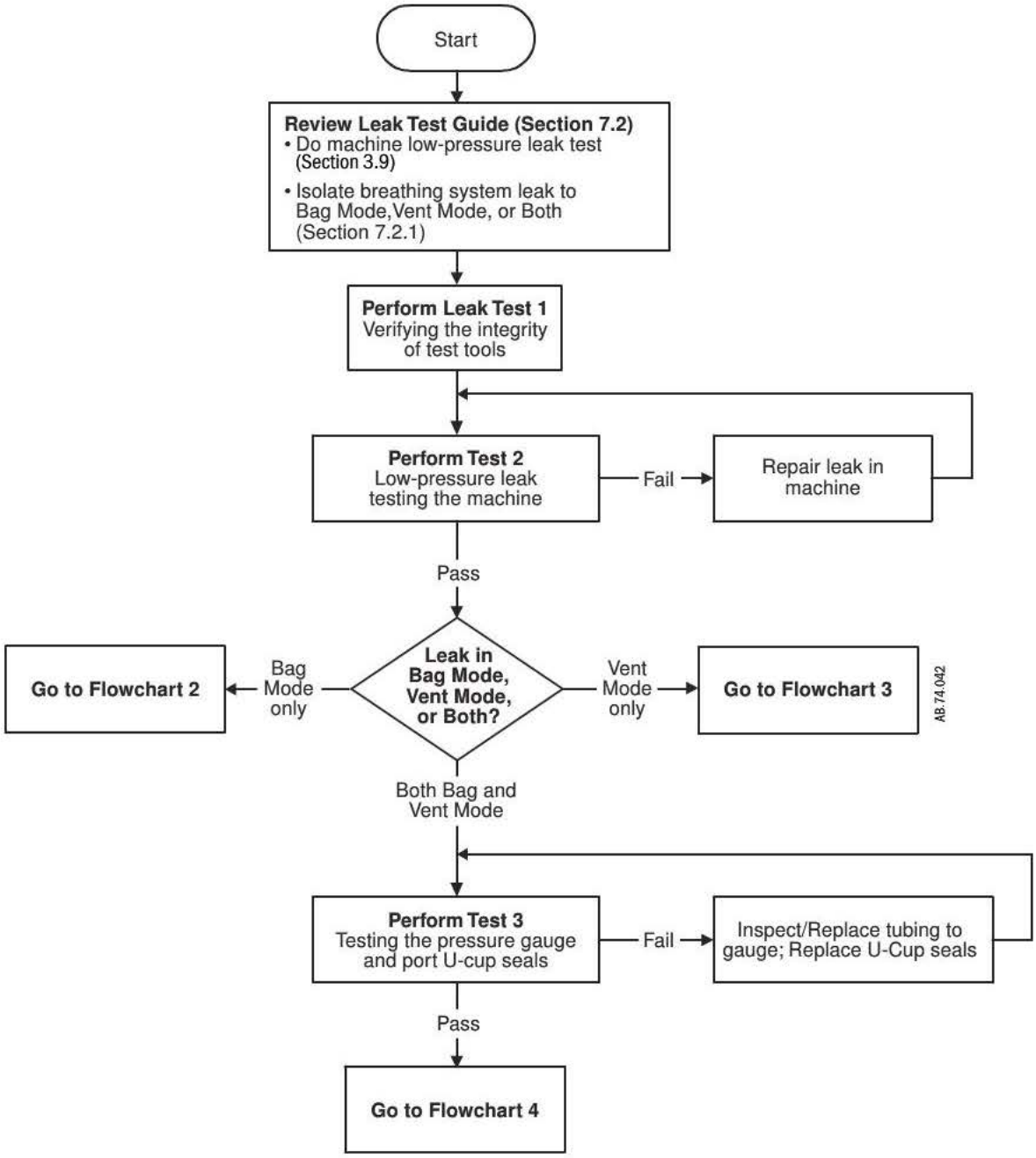

***Flowchart* 1**

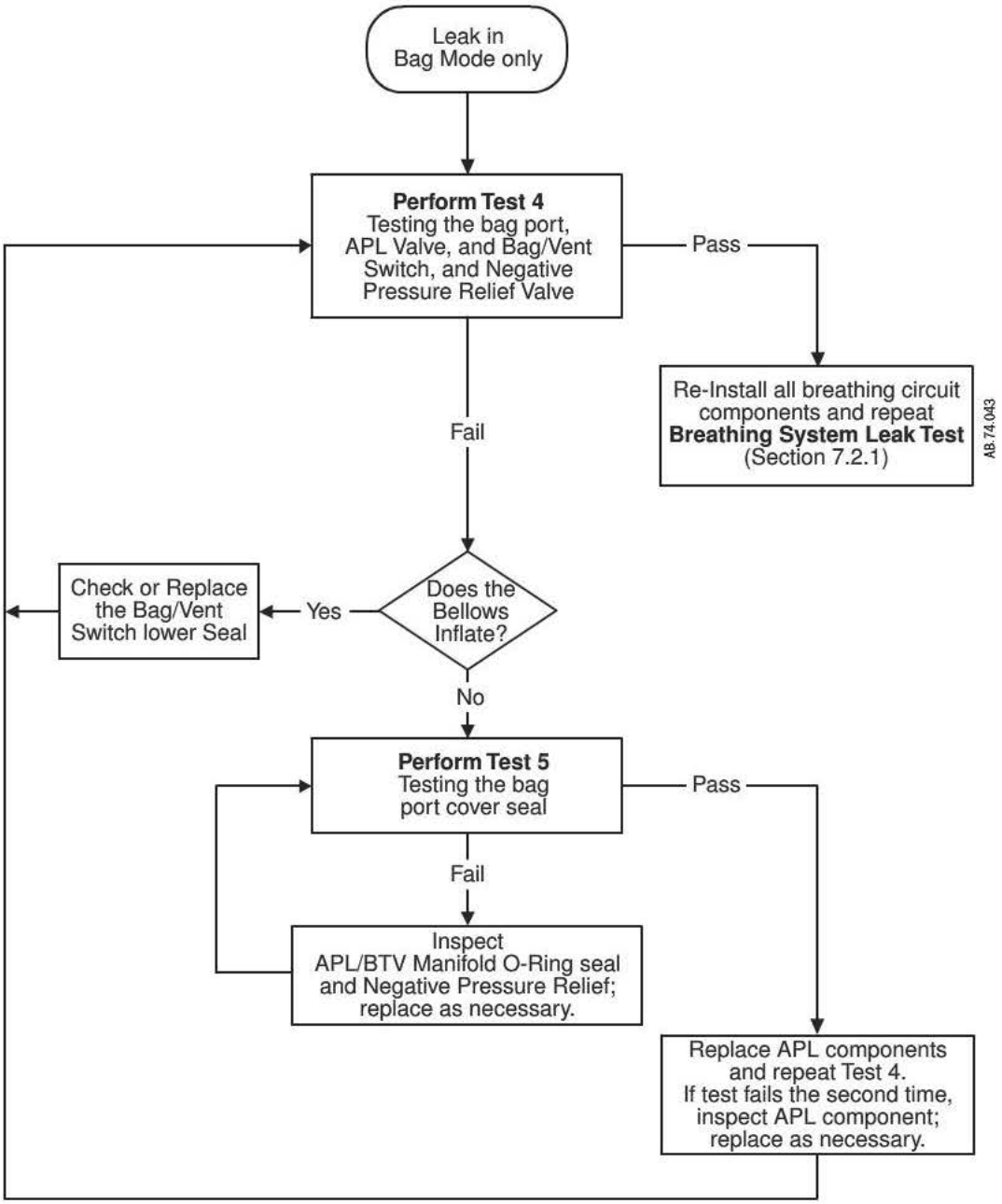
Leak in
Bag Mode only
Perform Test 4
Testing the bag port,
APL Valve, and Bag/Vent
Switch, and Negative
Pressure Relief Valve
Pass
Re-Install all breathing circuit
components and repeat
Breathing System Leak Test
(Section 7.2.1)
A8.74.043
Fail
Does the
Bellows
Inflate?
Yes
Check or Replace
the Bag/Vent
Switch lower Seal
No
Perform Test 5
Testing the bag
port cover seal
Pass
Fail
Inspect
APL/BTV Manifold O-Ring seal
and Negative Pressure Relief;
replace as necessary.
Replace APL components
and repeat Test 4.
If test fails the second time,
inspect APL component;
replace as necessary.

Flowchart 2

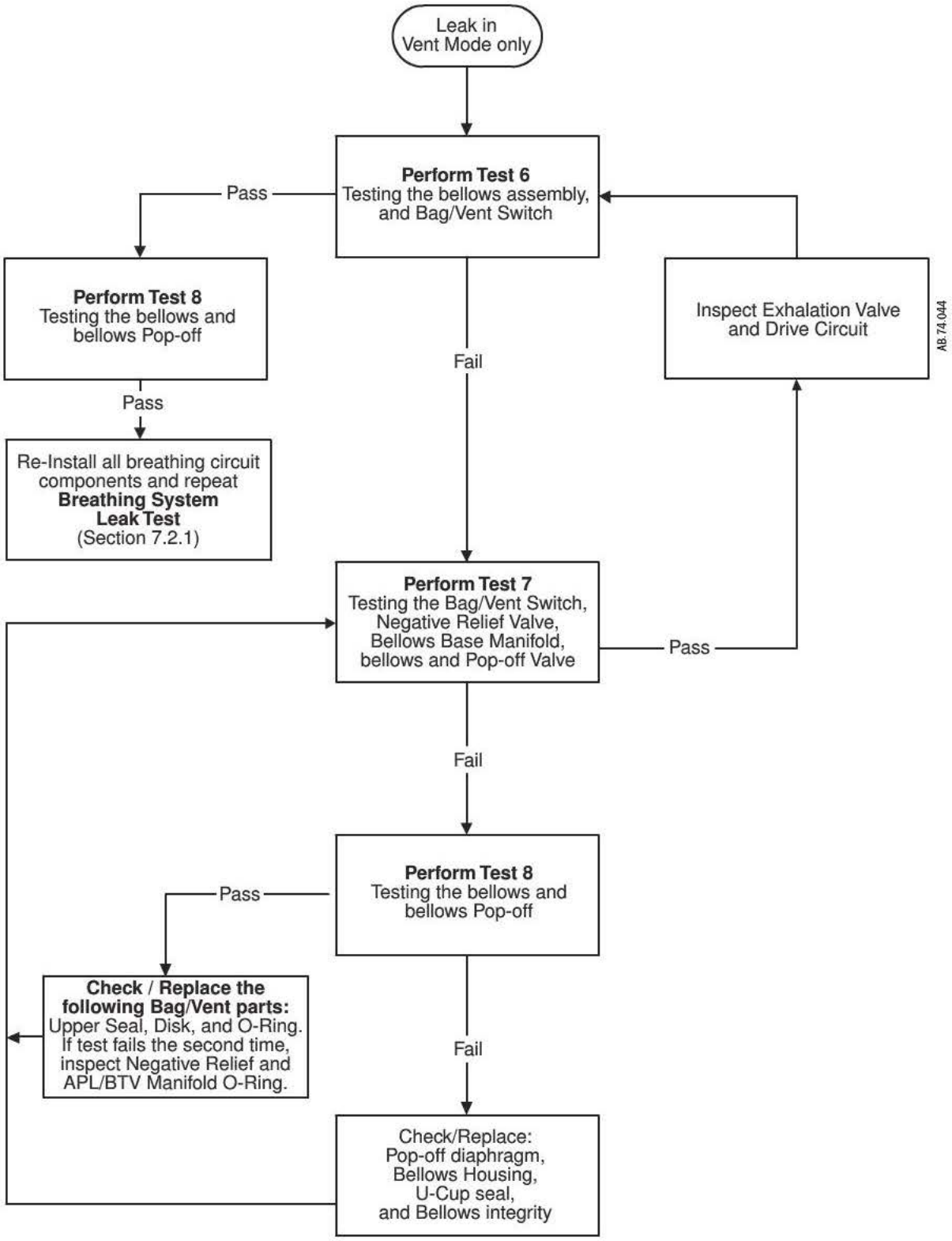
Leak in
Vent Mode only
Perform Test 6
Testing the bellows assembly, and Bag/Vent Switch
Pass
Perform Test 8
Testing the bellows and bellows Pop-off
Pass
Re-Install all breathing circuit components and repeat
Breathing System Leak Test
(Section 7.2.1)
Fail
Inspect Exhalation Valve and Drive Circuit
AB.74.044
Perform Test 7
Testing the Bag/Vent Switch, Negative Relief Valve, Bellows Base Manifold, bellows and Pop-off Valve
Pass
Fail
Perform Test 8
Testing the bellows and bellows Pop-off
Pass
Check / Replace the following Bag/Vent parts:
Upper Seal, Disk, and O-Ring.
If test fails the second time, inspect Negative Relief and APL/BTV Manifold O-Ring.
Fail
Check/Replace:
Pop-off diaphragm,
Bellows Housing,
U-Cup seal,
and Bellows integrity

Flowchart 3

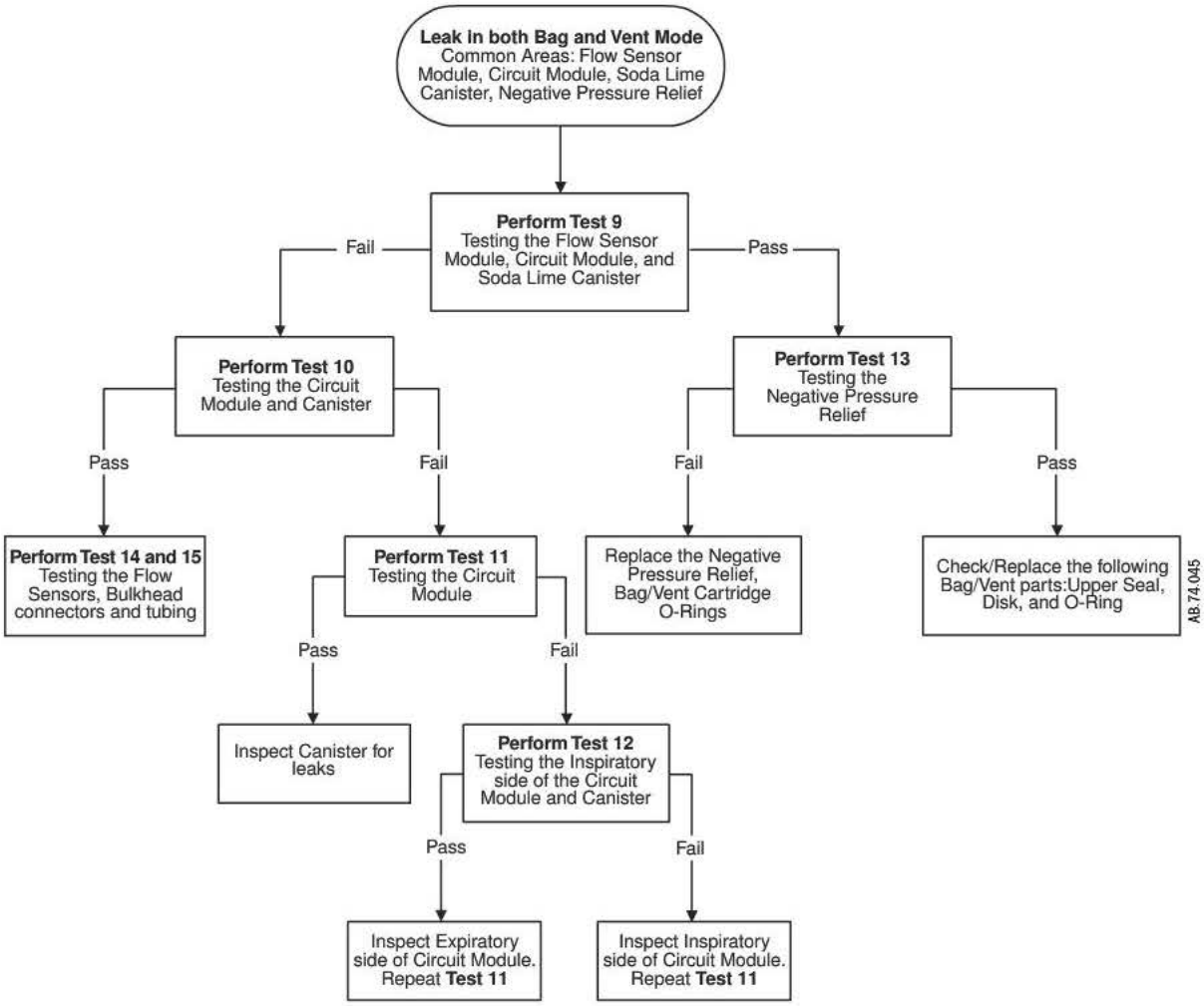
Leak in both Bag and Vent Mode
Common Areas: Flow Sensor Module, Circuit Module, Soda Lime Canister, Negative Pressure Relief
Perform Test 9
Testing the Flow Sensor Module, Circuit Module, and Soda Lime Canister
Fail
Pass
Perform Test 10
Testing the Circuit Module and Canister
Perform Test 13
Testing the Negative Pressure Relief
Pass
Fail
Fail
Pass
Perform Test 14 and 15
Testing the Flow Sensors, Bulkhead connectors and tubing
Perform Test 11
Testing the Circuit Module
Replace the Negative Pressure Relief, Bag/Vent Cartridge O-Rings
Check/Replace the following Bag/Vent parts:Upper Seal, Disk, and O-Ring
AB.74.045
Pass
Fail
Inspect Canister for leaks
Perform Test 12
Testing the Inspiratory side of the Circuit Module and Canister
Pass
Fail
Inspect Expiratory side of Circuit Module. Repeat Test 11
Inspect Inspiratory side of Circuit Module. Repeat Test 11

Flowchart 4

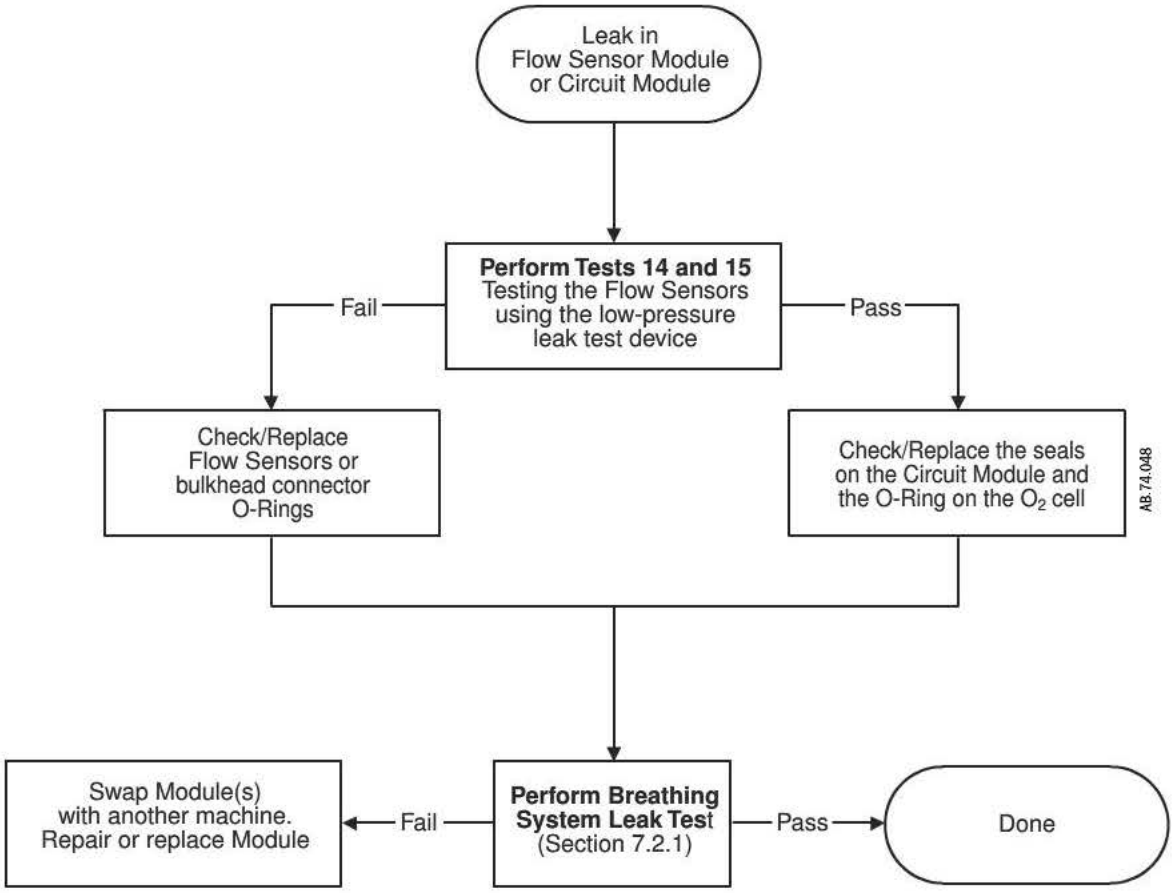
Leak in
Flow Sensor Module
or Circuit Module
Perform Tests 14 and 15
Testing the Flow Sensors
using the low-pressure
leak test device
Fail
Pass
Check/Replace
Flow Sensors or
bulkhead connector
O-Rings
Check/Replace the seals
on the Circuit Module and
the O-Ring on the O_2 cell
AB.74.048
Swap Module(s)
with another machine.
Repair or replace Module
Fail
Perform Breathing
System Leak Test
(Section 7.2.1)
Pass
Done

***Flowchart* 5**

7.2.3 Leak Isolation Tests

The previous flowcharts refer you to the following tests.

These tests require the use of the Low Pressure Leak Test Device and the Leak Test Tool Kit (refer to Section 10.1, "Service tools".

The Leak Test Tool Kit includes:

- the Machine Test Tool
- the Circuit Test Tool
- and various Test Plugs

When performing these tests, ensure that the ACGO selector switch is set to the ABS position.

Test 1 Verifying the integrity of the test tools. 7-13

Test 2 Low-pressure leak testing the machine 7-14

Test 3 Testing the airway pressure gauge, and Port 1 and Port 3 u-cup seals 7-15

Test 4 Testing the bag port cover, the APL valve, the Bag/Vent switch, and the negative pressure relief valve 7-16

Test 5 Testing the APL diaphram 7-17

Test 6 Testing the bellows module and the Bag/Vent switch 7-18

Test 7 Testing the bellows, the bellows pop-off valve, the bellows base manifold, and the Bag/Vent switch 7-19

Test 8 Testing the bellows assembly 7-20

Test 9 Testing the flow sensor module, the circuit module, and the soda lime canister . 7-21

Test 10 Testing the circuit module and the canister 7-22

Test 11 Testing the circuit module 7-22

Test 12 Testing the inspiratory side of the circuit module 7-23

Test 13 Testing the negative pressure relief valve. 7-24

Test 14 Testing the flow sensors only. 7-25

Test 15 Testing a flow sensor including the Ventilator Monitoring Assembly and interfacing components 7-26

⚠ WARNING Objects in the breathing system can stop gas flow to the patient. This can cause injury or death:

- Do not use a test plug that is small enough to fall into the breathing system.
- Make sure that there are no test plugs or other objects caught in the breathing system.

⚠ CAUTION Do not use O_2 Flush for leak isolation tests. Do not leave pressurized systems unattended. High pressure and equipment damage may result.

Test 1 Verifying the integrity of the test tools

Machine Test Tool
Front View

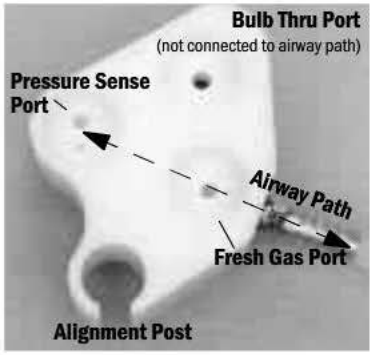

Back View

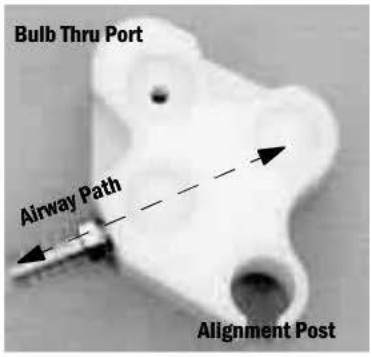

1. Verify integrity of low-pressure leak test device.
   - Put your hand on the inlet of the leak test device. Push hard for a good seal.
   - Squeeze the bulb to remove all air from the bulb.
   - If the bulb completely inflates in less than 60 seconds, replace the leak test device.

2. Attach the low-pressure leak test device to the Machine Test Tool.
3. Plug the two pressure orifices.
4. Repeatedly squeeze and release the hand bulb until it remains collapsed.
5. If the bulb inflates in less than 30 seconds, locate and correct the leak.

Test 2 Low-pressure leak testing the machine

1. Remove the breathing system from the machine.
2. Attach the Machine Test Tool (using only the Thru Port) and the low-pressure leak test device to **Port 3** of the breathing system interface as shown above.

   Note: To prevent damage to the airway pressure gauge, ensure that the gauge port (**Port 1**) is not connected to the Test Tool.
3. Set the ACGO selector switch to ABS.
4. Set the system switch to Standby.
5. Turn off all vaporizers.
6. Open the flow controls one and a half turns counterclockwise.
7. Compress and release the bulb until it is empty.
8. The vacuum causes the floats to move. This is usual. If the bulb completely inflates in 30 seconds or less, there is a leak in the low-pressure circuit.

Test 3 Testing the airway pressure gauge, and Port 1 and Port 3 u-cup seals

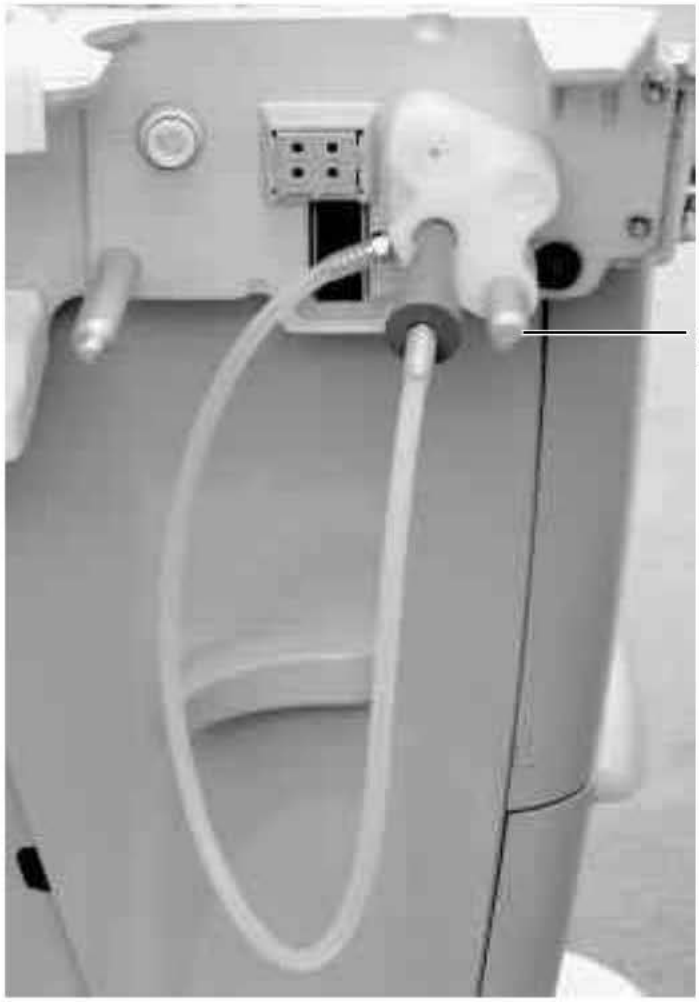

1. Attach the Machine Test Tool to the breathing system interface ports (using the alignment post) as shown above.
2. Turn all of the flow controls fully clockwise (minimum flow).
3. Set the system switch to On.
4. Occlude the tapered plug.
   - At minimum flow, the airway pressure gauge reading should increase.
   - If not, there is a leak in the tested circuit.

Test 4 Testing the bag port cover, the APL valve, the Bag/Vent switch, and the negative pressure relief valve

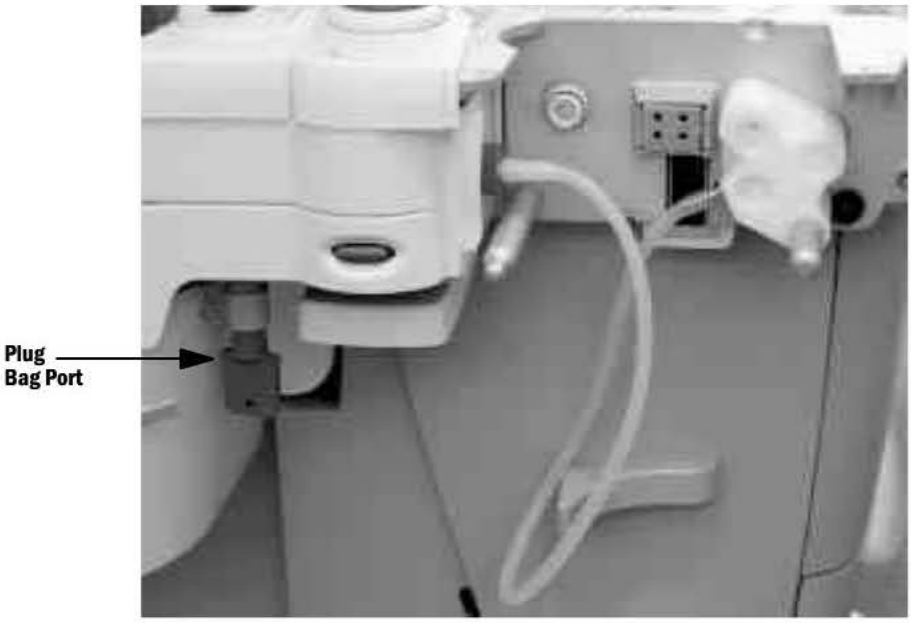

1. Separate the Bellows Module from the Circuit Module and re-install the Bellows Module.
2. Occlude the Bag Port connector.
3. Connect the Machine Test Tool to the interface ports as shown above.
4. Set the Bag /Vent switch to Bag and close the APL Valve (70 cm H_2O).
5. Slowly increase the O_2 flow to achieve 30 cm H_2O.
   - The leak rate is equal to the flow needed to maintain 30 cm H_2O.
   - The leak rate should be less than 200 mL/min.

   Note: If the bellows rises, it indicates a leak in the Bag /Vent Switch.

Test 5 Testing the APL diaphram

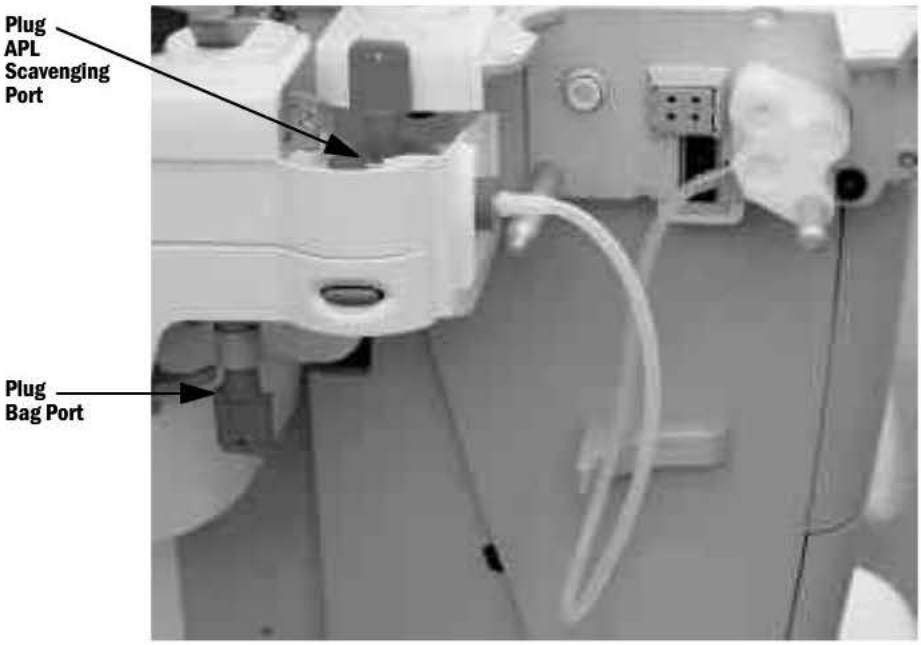

Note If required, set up the Machine Test Tool and breathing system as shown in Test 4.

1. Slide the Bellows Module away from the machine.
2. Remove the APL ramp and diaphragm.
3. Insert a Test Plug into the APL scavenging port, as shown above.
4. Slide the Bellows Module partially back onto the machine casting.
5. Ensure that the Bag Port is plugged and that the Bag/Vent switch is set to Bag.
6. Slowly increase the O_2 flow to achieve 30 cm H_2O.
   - Leak rate is equal to the flow needed to maintain 30 cm H_2O.
   - The leak rate should be less than 200 mL/min.

Test 6 Testing the bellows module and the Bag/Vent switch

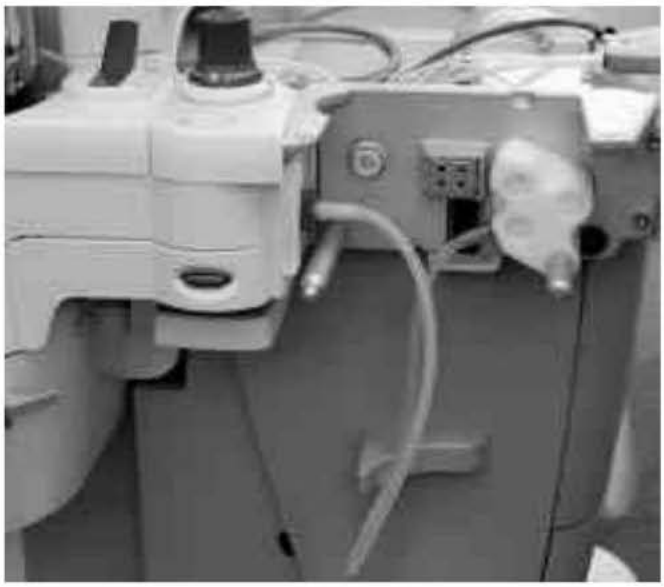

1. Separate the Bellows Module from the Circuit Module and re-install the Bellows Module.
2. Enter the Service Mode: Push and hold the adjustment knob on the ventilator's display and set the system switch to On.
   a. Select and confirm "Service Mode".
   b. Select and confirm "Breathing System Leak Test" (Section 4.3.12).
3. Follow the instructions on the screen.
   - At step 6, connect the Machine Test Tool to the interface ports as shown above, instead. Continue with steps 7, 8, and 9 on the screen.
   - The leak rate should be less than 200 mL/min.

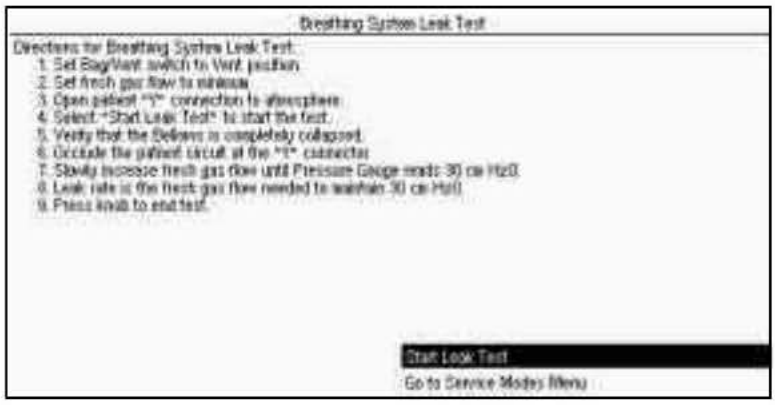

Test 7 Testing the bellows, the bellows pop-off valve, the bellows base manifold, and the Bag/Vent switch

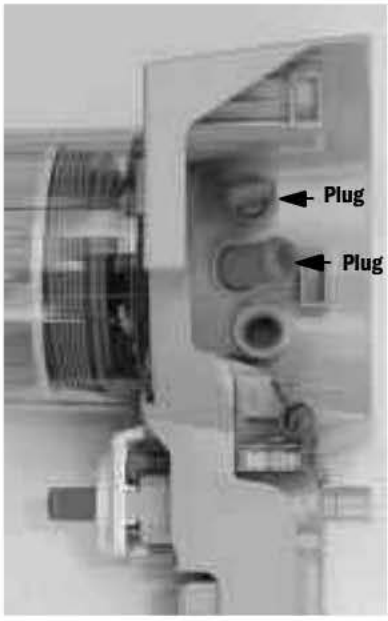

1. Separate the Bellows Module from the Circuit Module.
2. Insert appropriate test plugs into the bellows base manifold as shown to the left.

   Note: Position the bellows assembly so that the bellows remain collapsed as you plug the ports.
3. Set Bag/Vent switch to Vent.
4. Position the bellows upright with the bellows collapsed.
5. Connect the Machine Test Tool to the interface ports as shown above.
6. Slowly increase the O_2 flow to achieve 30 cm H_2O.

   Note: The bellows will rise until the pressure equalizes.

   - The leak rate is equal to the flow needed to maintain 30 cm H_2O.
   - The leak rate should be less than 200 mL/min.

Test 8 Testing the bellows assembly

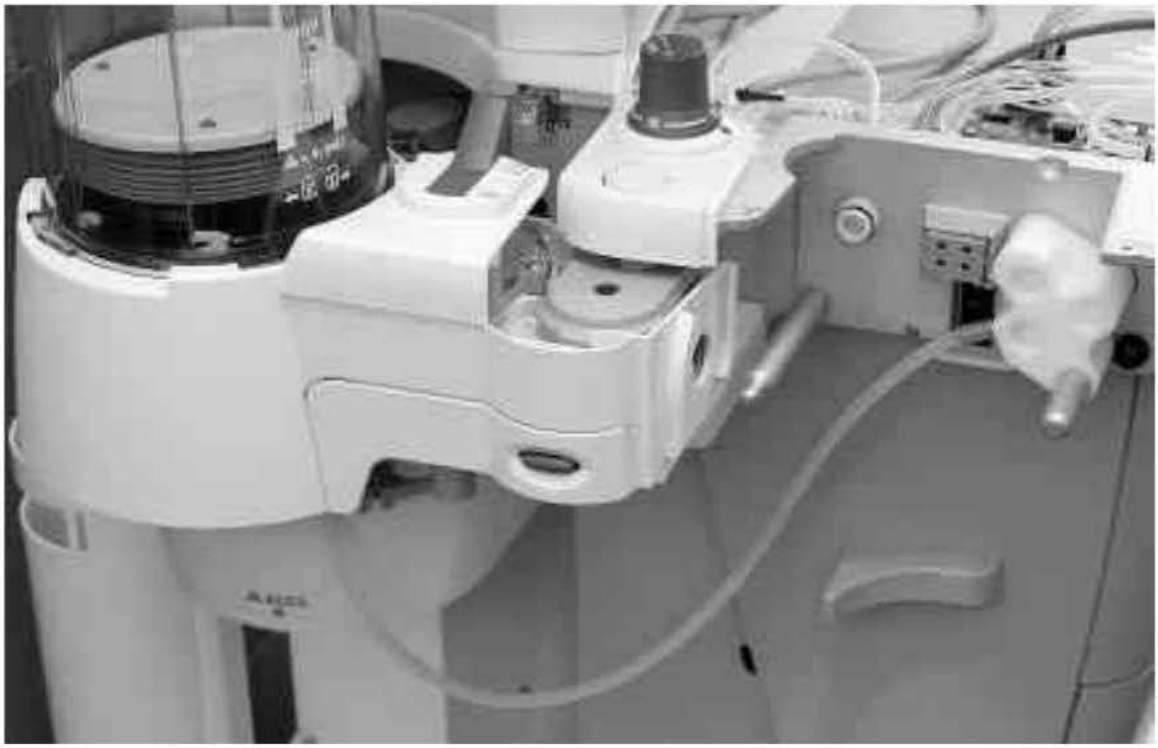

Note If required, set up the Machine Test Tool and breathing system as shown in Test 7.

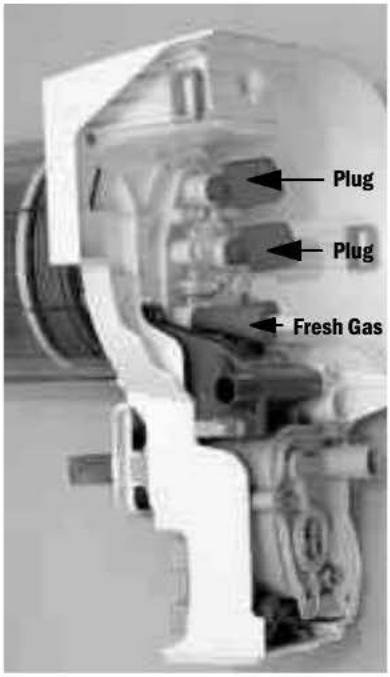

1. Remove the bellows base manifold from the Bellows Module.
2. Insert appropriate test plugs into the bellows base manifold as shown to the left.

   Note: Position the bellows assembly so that the bellows remain collapsed as you plug the ports.
3. Connect the tapered plug of the Machine Test Tool to the bellows base inlet as shown to the left.
4. Position the bellows upright with the bellows collapsed.
5. Slowly increase the O_2 flow to achieve 30 cm H_2O.

   Note: The bellows will rise until the pressure equalizes.

   - The leak rate is equal to the flow needed to maintain 30 cm H_2O.
   - The leak rate should be less than 200 mL/min.

Test 9 Testing the flow sensor module, the circuit module, and the soda lime canister

1. Separate the Bellows Module from the Circuit Module and re-install the Circuit/Flow Sensor Module.
2. Connect short tubing between the inhalation and exhalation ports of the breathing system.
3. Insert an appropriate test plug in the outlet port of the Circuit Module.
4. Enter the Service Mode: Push and hold the adjustment knob on the ventilator's display and set the system switch to On.
   a. Select and confirm "Service Modes."
   b. Follow the menu structure outline below to reach the adjustment for the inspiratory flow valve. Select and confirm at each step.
      - "Diagnostics Tests/Tools"
      - "Display A/D Channels"
   c. Record the Inspiratory and Expiratory Flow actual values.

      Note: The Inspiratory and Expiratory Flow actual values should be near zero.
5. Slowly increase the O_2 flow to achieve 30 cm H_2O.
   - The leak rate is equal to the flow needed to maintain 30 cm H_2O.
   - The leak rate should be less than 200 mL/min.
6. Observe the Inspiratory and Expiratory Flow actual values. The values should be near zero, as previously recorded in step 4.

   Note: If one channel indicates flow, see "Inaccurate Volume Ventilation Troubleshooting" in the 7100 Ventilator Service Manual.
7. Release Pressure.

Test 10 Testing the circuit module and the canister

1. Remove the Flow Sensor module.
2. Connect the Circuit Test Tool to the Circuit Module as shown above.
3. Slowly increase the O_2 flow to achieve 30cmH_2O. The leak rate is equal to the flow required to maintain 30 cmH_2O.
   - The leak rate should be less than 200 mL/min.

Test 11 Testing the circuit module

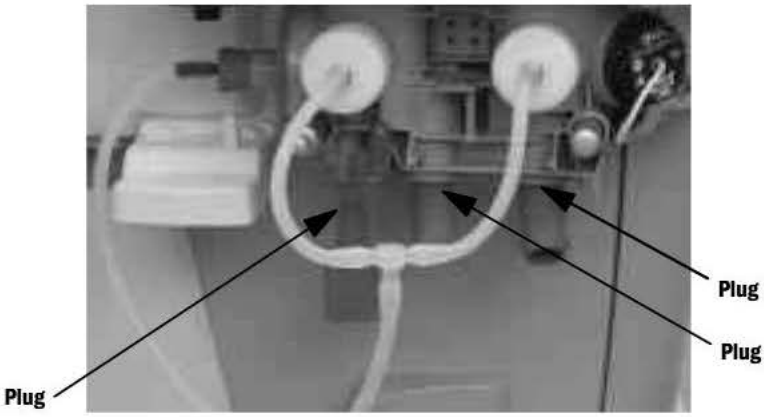

Note: If required, set up the machine as in Test 10.

1. Remove the Soda Lime Canister.
2. Using appropriate Test Plugs, plug the three canister ports in the Circuit Module as shown above.
3. Slowly increase the O_2 flow to achieve 30 cm H_2O.
   - The leak rate is equal to the flow needed to maintain 30 cm H_2O.
   - The leak rate should be less than 200 mL/min.

Test 12 Testing the inspiratory side of the circuit module

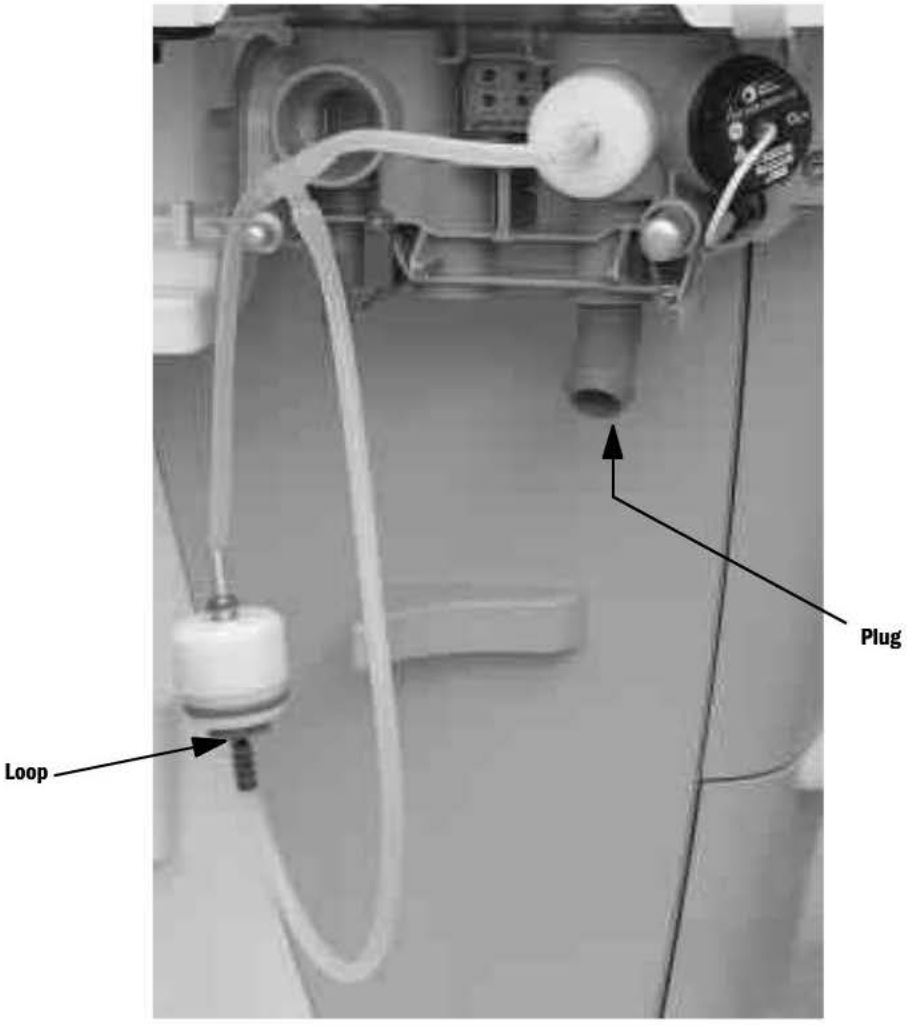

Note: If required, set up the machine as in Test 10 and 11.

1. Connect the Circuit Test Tool to the Circuit Module as shown above.
2. Insert an appropriate test plug in the inspiratory outlet to the canister as shown above.
3. Slowly increase the O_2 flow to achieve 30 cm H_2O.
   - The leak rate is equal to the flow needed to maintain 30 cm H_2O.
   - The leak rate should be less than 200 mL/min.

Test 13 Testing the negative pressure relief valve

1. Separate the Bellows Module from the Circuit Module.
2. Remove the Bellows Interface Manifold.
3. Insert test plug (recessed end) into the rear Bag/Vent switch port as shown.

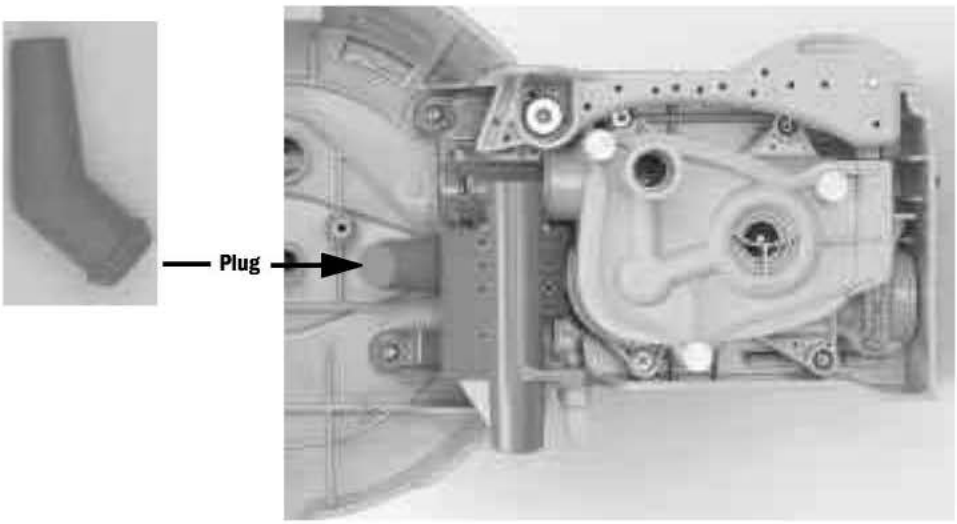

4. Install the Bellows Module.
5. Connect the Machine Test Tool to the interface ports and the Bellows Module as shown above.

6. Set the Bag/Vent Switch to Vent.
7. Slowly increase the O_2 flow to achieve 30 cm H_2O.
   - The leak rate is equal to the flow needed to maintain 30 cm H_2O.
   - The leak rate should be less than 200 mL/min.

Test 14 Testing the flow sensors only

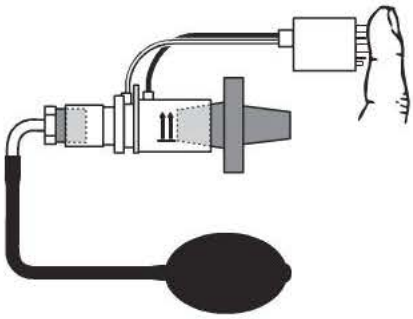

1. Remove the Flow Sensor Module.
2. Plug each Flow Sensor as shown above.
3. Connect the low-pressure leak test device to the open end of the Flow Sensor.
4. Block the connector end of the Flow Sensor with your hand.
5. Compress and release the bulb until it is empty.
6. If the bulb inflates in 30 seconds or less, there is a leak in the flow sensor.
7. If there are no leaks in the flow sensors, go to Test 15.

Test 15 Testing a flow sensor including the Ventilator Monitoring Assembly and interfacing components

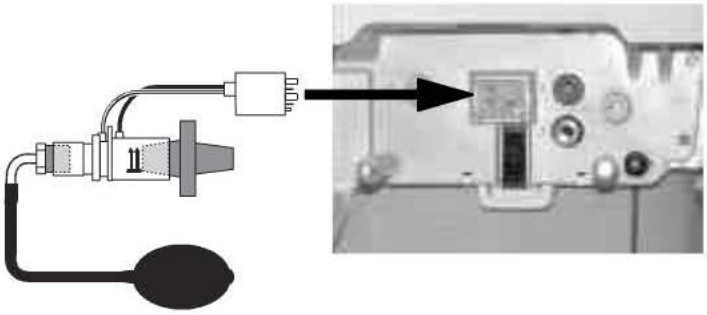

1. Remove Flow Sensors from the Flow Sensor Module.
2. Attach the Flow Sensor to the bulkhead connector.
3. Plug each Flow Sensor as shown.
4. Connect the low-pressure leak test device to the open end of the Flow Sensor.
5. Compress and release the bulb until it is empty.
6. If the bulb inflates in 30 seconds or less, there is a leak. The leak may be through the connector o-rings, in the internal tubbing, or in the Transducer on the VMB.

7.3 Ventilator Troubleshooting instructions

For ventilator problems that do not generate any error or alarm messages, even though the ventilator may not be functioning correctly:

- Refer to section 7.6, Mechanical/electrical troubleshooting guide.

For ventilator problems that result in an Alarm or Error message:

- Refer to section 7.4, System Error Log.
- Refer to section 7.5, Alarm messages.

To help isolate a problem:

- Refer to section 7.7, Troubleshooting Flowcharts.

To locate specific test points:

- Refer to section 7.8, Power supply test points.

Important If the ventilator experiences extreme electrical interference, it may interrupt mechanical ventilation. If this interruption occurs, the ventilator generates an internal reset function and resumes normal operation after two (2) seconds. For situations where continuous electrical interference is experienced by the ventilator, causing a continuous interruption, the ventilator's internal reset repeats until the interference ceases.

If the electrical interference is continuously present and mechanical ventilation is interrupted for approximately 30 seconds, the ventilator produces a continuous beeping audio alarm. Manual ventilation of the patient must be performed while the mechanical ventilation is interrupted. When the electrical interference ceases, the continuous beeping audio alarm can be silenced only by turning the ventilator or anesthesia machine, as applicable, power switch OFF and after five seconds back ON.

⚠ **WARNING** This system operates correctly at the electrical interference levels of IEC 601-1-2. Higher levels can cause nuisance alarms that may stop mechanical ventilation.

⚠ **WARNING** Manual ventilation must be performed when electrical interference causes interruption of ventilator delivered mechanical ventilation. Manual ventilation must be continued until the ventilator resumes normal operation or an alternate ventilator/anesthesia system can be used.

7.4 System Error Log

The Error Log (Section 4.3.2) displays up to 10 of the most current error messages that have been logged.

Error messages include:

- Minimum Monitoring alarms that stop mechanical ventilation;
- Minimum System Shutdown alarms that stop mechanical ventilation and monitoring.

To troubleshoot Error Log messages, refer to Section 7.5, "*Alarm Messages*".

7.5 Alarm messages

The Service Mode includes a log of the most recent Alarm messages (Section 4.3.1) experienced by the ventilator system.

If a User Alarm persists after the recommended action has been performed, the Service Repair column indicates the probable component and related circuit that needs repair. Use the Service Mode tests to isolate the fault.

For messages that begin with "Ventilate Manually:" and are followed by a specific message, refer to the specific alarm message.

For numbers in parentheses preceded with an asterisk (*X), see the applicable footnote at the end of the table.

Message	Alarm type/ Priority	Enabling Criteria / Removal Criteria	Alarm Condition	Service Repair
+15V Analog Out-of-Range	Minimum Shutdown (*5)		Voltage out-of-range	Check the +15 V supply from service mode under Display A/D channels. Verify that the Counts value is between 1914 and 2262. If not in range, (Refer to section 5.6.3) measure the +15 V supply on CPU board at TP1 referenced to ground at TP207 (14.25 to 15.75 volts). If this voltage is in range, replace the CPU board because the problem is in the A/D channel. If not in range, remove the ESIB to CPU cable and re-test. If in range, the ESIB to CPU cable or ESIB may be shorting the +12 V ESIB supply and loading the +15 V supply. If still not in range, replace the CPU.
-15V Analog Out-of-Range	Minimum Shutdown (*5)		Voltage out-of-range	Replace the CPU board.
12 Hour Test	User Alarm	System in use for more than 12 hours without a power-up self test. To do the test, move the system switch from Standby to On.		
Absorber panel open	User Alarm	ABS not completely engaged. Push the breathing system into the frame and ensure it latches.		If persists, check: ▪ ABS ON switch ▪ harness to ESIB ▪ ESIB ▪ cable from ESIB to CPU board
A/D Converter Failure	Minimum Shutdown (*5)	Ventilator malfunction.	Ventilate manually. Monitoring is not reliable.	Replace: ▪ CPU board

Message	Alarm type/ Priority	Enabling Criteria / Removal Criteria	Alarm Condition	Service Repair
Adjust Low Ve Limit	User Alarm	The audible circuit leak alarm is Off (Alarm menu) but the low VE alarm limit is not set within 50% of measured Ve. Ve alarm limit is Off in SIMV or PSVPro modes.		
		Set the low Ve alarm.		
Apnea Alarm Standby	User Alarm	Normal condition after End Case, power-up, or ACGO change from On to Off.	Monitoring resumes after first breath (mechanical) or 2 breaths within 30 sec (non-mechanical).	
Apnea Alarm Off	User Alarm	The cardiac bypass option is selected (alarm limit menu).	Apnea alarms are normally turned off when this option is selected.	
Aux Gas Outlet On	User Alarm	The outlet selection switch is set to the auxiliary common gas outlet.		If persists, check: ▪ ACGO switch ▪ ESIB ▪ cable from ESIB to CPU board
		Connect the patient circuit to the auxiliary outlet. For mechanical ventilation or manual ventilation with monitoring, select the common gas outlet.		
Backup Mode Active	User Alarm	SIMV-PC + PSV mode entered.	No spontaneous breath within set delay time.	
Battery Charger Fail	User Alarm	The current in the battery charging circuit is too high.	The system is operational, but may fail later depending on what caused this alarm.	Replace: ▪ battery ▪ CPU board
Battery Charging	User Alarm	The battery is not fully charged. If power fails, the total backup time will be less than 30 minutes.		If persists, replace: ▪ battery ▪ CPU board
		Leave the system plugged in to charge the battery.		
Battery Current High	User Alarm	Battery current > 6 amps for 10 seconds.	The system continues to operate but may fail.	If persists, replace: ▪ battery ▪ CPU board
Battery Failure High	User Alarm	Battery voltage > 16 V for 10 seconds.	The system continues to operate, but may fail.	If persists, replace: ▪ battery ▪ CPU board

Message	Alarm type/ Priority	Enabling Criteria / Removal Criteria	Alarm Condition	Service Repair
Battery Failure Low	User Alarm	The battery voltage is too low (<7 V) to supply the system if power fails.	The battery does not have enough charge to power the equipment if power fails.	If persists, replace: ▪ battery ▪ CPU board
		Leave the system plugged in to charge the battery.		
Cal Flow Sensors	User Alarm	The last flow sensor calibration failed.		This alarm message indicates that the last flow sensor's differential pressure transducer calibration failed. With the BTV switch in Bag, ensure sensors are removed until the "No Insp/No Exp flow sensor" message appears. If persists, replace: ▪ Check for moisture ▪ Refer to Troubleshooting Flowcharts (Section 5.5)
		Calibrate the flow sensors. Look for water in the flow sensor tubes. Dry if necessary.		
Calibrate O2 Sensor	low	Sensor connected	Offset, slope, or cell voltage not in range or O_2 > 110%	Calibrate the O_2 sensor. If calibration fails, replace the O_2 sensor. If calibration still fails, replace the ESIB board.
		Successful calibration of sensor.		
Canister open	User Alarm	This alarm should not occur in Aespire 7900.		If occurs, check: ▪ harness to ESIB ▪ cable from ESIB to CPU board
		The open connector sets the canister switch signal to "closed" by default.		
Cannot Drive Bellows	User Alarm	The internal manifold pressure is higher than Paw + tolerance.		Check the breathing circuit for leaks or hose occlusions. Perform flow sensor calibration. Check the drive gas check valve. Check ESIB to CPU cabling. Replace the ESIB board. Replace the CPU board.
		Fill the bellows, if empty.		
Cardiac Bypass	User Alarm	The cardiac bypass option is selected (Alarm limit menu).		
		Use the alarm limits menu to change this setting.		
Check Flow Sensors	medium (*1)	In-range flow data available in mechanical ventilation	No or negative flow on insp sensor during inspiration in a circle system or negative flow on exp sensor in expiration	Check flow sensor connections for "No Flow Sensor" alarm. Check the breathing circuit Perform flow sensor calibration. Check insp/exp check valves. Replace the flow sensors. Check ESIB to CPU cabling. Replace the ESIB board. Replace the CPU board.
		Inspiratory and/or expiratory flow sensor(s) are connected Two consecutive breaths measured with "correct" flow seen by flow sensors		

Message	Alarm type/ Priority	Enabling Criteria / Removal Criteria	Alarm Condition	Service Repair
Circuit Leak Audio Off	User Alarm	Control setting on the Alarm limit menu.	This message tells you that the audio alarm for circuit leaks was turned off.	
Connect O2 Sensor	low		Digital I/O signal indicates a disconnect	Is O_2 sensor connected. If it is, replace the O_2 cable. If problem persists, check or replace the ESIB to CPU cable. If problem persists, replace the ESIB board. If problem persists, replace the CPU board.
		Alarm condition becomes false.		
CPU Failure	Minimum Shutdown (*5)	Ventilator malfunction.	Ventilate manually. Monitoring is not reliable.	Replace the CPU board.
CPU Internal Error (*6)	Minimum Shutdown (*5)	Ventilator malfunction.	Ventilate manually. Monitoring is not reliable.	Replace the CPU board.
Display Voltage Out-of-Range	Minimum Shutdown (*5)		Display voltage out-of-range	Check the VEL supply from service mode under Display A/D channels. Verify that the Counts value is between 1645 and 2675. If not in range, (Refer to section 5.6.3) measure the VEL supply on CPU board at TP213 referenced to ground at TP12 (10 to 15.23 volts). If this voltage is in range, replace the CPU board because the problem is in the A/D channel. If the VEL supply is not in range, remove Display to CPU cable and re-test. If in range, replace the display. If still not in range, replace the CPU.
Exp Flow Sensor Fail	User Alarm	The system cannot read the calibration data stored in the sensor.	Operation continues with default values.	Replace the flow sensor.
Exp Reverse Flow	medium (*1)	In-range flow data available in mechanical ventilation	Negative flow on expiratory sensor during inspiration in circle system	Check flow sensor connections for "No Flow Sensor" alarm. Check the breathing circuit Perform flow sensor calibration. Check insp/exp check valves. Replace the flow sensors. Check ESIB to CPU cabling. Replace the ESIB board. Replace the CPU board.
		Two consecutive breaths measured with "correct" flow seen by flow sensors		

Message	Alarm type/ Priority	Enabling Criteria / Removal Criteria	Alarm Condition	Service Repair
Flow Valve Failure (DAC) or (Current)	Minimum Monitoring (*7) (*8)		Incorrect feedback	Perform the flow valve test. Check the flow current sense from the service mode Display A/D channels. Should be near zero counts. If not, replace the CPU board. Check the cable to the flow valve from the CPU board. Check the flow valve resistance (approximately 1.75 ± 0.1 ohm). This must be tested at the flow valve, not through the cable from the CPU board. If not correct, replace the flow valve. Replace the CPU board.
Gas Inlet Valve Failure (*6)	Minimum Shutdown (*5)		Bootup test failure	Check the GIV current sense from service mode under Display A/D channels (2371 to 3884 counts). If out of range, check the CPU to gas inlet valve cabling. Then measure the gas inlet valve resistance to be 25 ± 2 ohms. If not, replace the gas inlet valve solenoid. Go to "Display I/O signals" screen. DPL switch status must be Off. If On is indicated, remove the bellows assembly. If On continues to be displayed, replace the ESIB. Perform Cal bleed resistor from service mode to ensure there is no problem with the bleed resistor. Replace the ESIB. Replace the CPU board.
Gas Inlet Valve Failure	Minimum Monitoring		Incorrect feedback	Perform the gas inlet valve test. Check the cable to the gas inlet valve from the CPU board. Check the gas inlet valve resistance (25 ± 2 ohms). Replace the CPU board.
Hardware Watchdog Failure (*6)	Minimum Shutdown (*5)	Ventilator malfunction.	Ventilate manually. Monitoring is not reliable.	Replace the CPU board.
Heliox Mode is On	low	The Heliox option is not available in Aespire 7900.		Set Heliox Mode to Off (Refer to Section 4.3.3.3 Heliox Mode).

Message	Alarm type/ Priority	Enabling Criteria / Removal Criteria	Alarm Condition	Service Repair
High O2	medium	In-range O_2 data available and alarm limit not = off	O_2 > high limit	Check O_2 limit. Is actual O_2 higher than limit setting? Verify O_2 calibration has been done correctly. Does calibration pass? If calibration does not pass, replace O_2 cell. If there is still a calibration problem, replace the ESIB board.
		Alarm condition becomes false or enabling criteria becomes false.		
High Paw (*2)	high	In-range P_{aw} data available	$P_{aw} > P_{limit}$	Check Pressure limit setting is not set too low for ventilator settings and breathing circuit. Check the breathing circuit for occlusions. Perform flow sensor calibration. Check ESIB to CPU cabling. Replace the ESIB board. Replace the CPU board.
		Alarm condition becomes false for 15 seconds or until the end of the next full inspiratory cycle.		
High VE	medium	In-range flow data available and alarm limit not = off	VE > high limit	Check ventilator settings and volume output. Check the breathing circuit and flow sensor connections. Perform flow sensor calibration. Replace the flow sensors. Check ESIB to CPU cabling. Replace the ESIB board. Replace the CPU board.
		Alarm condition becomes false or volume alarms state transition to standby (or off).		
High VTE	medium	In-range flow data available and alarm limit not = off	VTE > high limit	Check ventilator settings and volume output. Check the breathing circuit and flow sensor connections. Perform flow sensor calibration. Replace the flow sensors. Check ESIB to CPU cabling. Replace the ESIB board. Replace the CPU board.
		Alarm condition becomes false or volume alarms state transition to standby (or off).		
Insp Flow Sensor Fail	User Alarm	The system cannot read the calibration data stored in the sensor.	Operation continues with default values.	Replace the flow sensor.
Insp Reverse Flow	medium (*1)	In-range flow data available in mechanical ventilation	Negative flow on inspiratory sensor during expiration in circle system	Check flow sensor connections for "No Flow Sensor" alarm. Check the breathing circuit Perform flow sensor calibration. Check insp/exp check valves. Replace the flow sensors. Check ESIB to CPU cabling. Replace the ESIB board. Replace the CPU board.
		Two consecutive breaths measured with "correct" flow seen by flow sensors		

Message	Alarm type/ Priority	Enabling Criteria / Removal Criteria	Alarm Condition	Service Repair
Inspiration Stopped (*2), (*3)	high		Drive gas safety switch engaged	Check the breathing circuit. Check ventilator flow output. Perform flow sensor calibration. Perform the pressure limit switch test in the service screen. If test fails, replace the ESIB board or ESIB to CPU cabling If problem persists, replace the CPU board.
Internal Ventilator Clock Too Fast (*6)	Minimum Shutdown (*5)	Ventilator malfunction.	Ventilate manually. Monitoring is not reliable.	Replace the CPU board.
Internal Ventilator Clock Too Slow (*6)	Minimum Shutdown (*5)	Ventilator malfunction.	Ventilate manually. Monitoring is not reliable.	Replace the CPU board.
Invalid Circuit Module	User Alarm	In the Aespire 7900, the input to the ESIB is hard-wired to indicate a Circle patient circuit		Check: ▪ harness to ESIB ▪ cable from ESIB to CPU board
Limit Task Light Use	User Alarm	The system is running on battery power. No action is required. Turn off the light to save power.		
Loss of Backup Audio	User Alarm	The audio alarm will not sound for a CPU failure.	Monitor system operation.	Replace the CPU board.
Low Battery Voltage	User Alarm	Voltage is <11.65V while using battery power.	Manually ventilate the patient to save power.	Make sure power is connected and circuit breaker is closed. Check ventilator fuse.
Low Drive Gas Pres	User Alarm	The ventilator did not detect a rise in internal pressure when the flow valve opened.	Manually ventilate the patient.	Make sure that the appropriate gas supplies (O_2 or air) are connected and pressurized.
Low O2	high	In-range O_2 data available Alarm condition becomes false or enabling criteria becomes false.	O_2 < low limit	Check O_2 limit. Is actual O_2 lower than limit setting? Verify O_2 calibration has been done correctly. Does calibration pass? If calibration does not pass, replace O_2 sensor. If there is still a calibration problem, replace the ESIB board.

Message	Alarm type/ Priority	Enabling Criteria / Removal Criteria	Alarm Condition	Service Repair
Low Paw	high	In-range Paw data available	Peak airway pressure < $\lvert P_{min} \rvert$ + 4 for 20 consecutive seconds. P_{min} is the baseline pressure during a breath.	Check the breathing circuit for leaks. Check flow sensors hoses for leaks. Perform flow sensor calibration. Check ESIB to CPU cabling. Replace the ESIB board. Replace the CPU board.
		Alarm condition becomes false or transition from mechanical ventilation on to off.		
Low V_E	high	In-range flow data available and alarm limit not = off	V_E < low limit	Check ventilator settings and volume output. Check the breathing circuit. Perform flow sensor calibration. Replace the flow sensors. Check ESIB to CPU cabling. Replace the ESIB board. Replace the CPU board.
		Alarm condition becomes false or volume alarms state transition to standby (or off).		
Low V_{TE}	medium	In-range flow data available and alarm limit not = off	V_{TE} < low limit	Check ventilator settings and volume output. Check the breathing circuit and flow sensor connections. Perform flow sensor calibration. Replace the flow sensors. Check ESIB to CPU cabling. Replace the ESIB board. Replace the CPU board.
		Alarm condition becomes false or volume alarms state transition to standby (or off).		
Manifold Pressure Sensor Failure	Minimum Monitoring (*7) (*8)		Cal failure at bootup or DPL switch engaged and $P_{manifold}$ < 80 cm H_2O	Check the breathing circuit. Perform flow sensor calibration. If calibration fails, replace the ESIB. Check DPL switch for proper operation using the service mode Test press. limit switch check. If DPL switch test fails, replace the ESIB.
Memory (EEPROM) Fail	User Alarm	The system cannot access some stored values.	Default settings are used. Ventilation is still possible but service is necessary.	Replace the CPU board.
Memory (flash) Failure (*6)	Minimum Shutdown (*5)		CRC failure	Replace the CPU board.
Memory (RAM) Failure (*6)	Minimum Shutdown (*5)		Walking pattern test failure	Replace the CPU board.
Memory (Redundant Storage) Fail	Minimum Monitoring (*7) (*8)		Memory failure of system parameter(s)	Replace the CPU board.

Message	Alarm type/ Priority	Enabling Criteria / Removal Criteria	Alarm Condition	Service Repair
Memory (video) Failure (*6)	Minimum Shutdown (*6		Walking pattern test failure	Replace the CPU board.
Monitoring Only	User Alarm	A severe malfunction prevents mechanical ventilation. Other alarms may also occur.		Ventilate manually. Cycle system power (On-Standby-On). If the alarm clears, restart mechanical ventilation. If persists, replace: ▪ CPU board
No Circuit Module	User Alarm	In the Aespire 7900, the input to the ESIB is hard-wired to indicate a Circle patient circuit		Check: ▪ harness to ESIB ▪ cable from ESIB to CPU board
No CO_2 absorption	User Alarm	The canisters are open (out of the circuit) but the bypass mechanism prevents a leak (optional feature)		User setting. Close the canister release to remove CO_2 from exhaled gas.
No Exp Flow Sensor	medium (*1)		No expiratory sensor connected	Check flow sensor connections for "No Flow Sensor" alarm.
		Expiratory flow sensor is connected		Replace expiratory flow sensors.
No Insp Flow Sensor	medium (*1)		No inspiratory sensor connected	Check flow sensor connections for "No Flow Sensor" alarm.
		Inspiratory flow sensor is connected		Replace inspiratory flow sensor.
No O_2 pressure	User Alarm	The O_2 supply has failed.	Air flow will continue. Ventilate manually if necessary.	Connect a pipeline supply or install an O_2 cylinder.
O_2 Flush Failure	User Alarm	The pressure switch that detects flush flow has seen a very long flush (≥30 sec).	This alarm occurs if you hold down the Flush button for more than 30 seconds.	If persists, check: ▪ O_2 flush switch ▪ cable to CPU board
O_2 sensor out of circ	User Alarm	No breathing circuit module installed.		Install a breathing circuit module and an O_2 sensor.
On Battery - Power OK?	User Alarm	The mains supply is not connected or has failed and the system is using battery power.	Ventilate manually to save power. At full charge, the battery permits approximately 30 minutes of mechanical ventilation.	Make sure power is connected and circuit breaker is closed. Check ventilator fuse.
Patient Circuit Leak?	User Alarm	Exhaled volume <50% of inspired volume for at least 30 seconds (mechanical ventilation).		Check breathing circuit and flow sensor connections.

Message	Alarm type/ Priority	Enabling Criteria / Removal Criteria	Alarm Condition	Service Repair
Paw < -10 cm H_2O	high	In-range Paw data available	Paw < -10 cm H_2O	Check the breathing circuit. Perform flow sensor calibration (*9). Check ESIB to CPU cabling. Replace the ESIB board. Replace the CPU board.
		Alarm condition becomes false.		
PEEP Not Achieved	low	In-range Paw data available	Pmin does not reach within 2 cm H_2O of PEEP by end of mechanical expiration for 6 breaths in a row.	Check settings for not enough expiration time. Check the breathing circuit. Occlusions Check scavenging Check ventilator output with PEEP off Perform flow sensor calibration. Check that the patient airway pressure display matches the airway pressure gage. If they match, the problem may be pneumatic, (supply pressure, regulator, inlet or flow valve, etc.). Check ESIB to CPU cabling. Replace the ESIB board. Replace the CPU board.
		Alarm condition becomes false or any control setting changed (except Plimit) or mechanical ventilation transition on to off.		
Positive SIB Vref Out-of-Range	Minimum Shutdown (*5)		ESIB +12V supply voltage out-of-range	First, verify that the +15V Analog Supply Counts value is between1914 and 2262. If not in range, see the +15V Analog Out-of-Range alarm for diagnostics. Then, check the +12V ESIB Supply. Verify that the Counts value is between 1779 and 2322. If +12V ESIB Supply A/D count is not in range, remove ESIB to CPU cable and recheck the counts. If not in range, replace the CPU board. If +12V ESIB Supply A/D count is in range, replace the ESIB to CPU cable or the ESIB.
Pres Control (Mode) NOT Avail.	Medium (pressure control); else low	Ventilator not fully functional and pressure control mode not available		Check the breathing circuit and flow sensor connections. Check the flow sensors for proper connection. Perform flow sensor calibration. Replace the flow sensors. Check ESIB to CPU cabling. Replace the ESIB board. Replace the CPU board.
		Alarm condition becomes false.		

Message	Alarm type/ Priority	Enabling Criteria / Removal Criteria	Alarm Condition	Service Repair
Pres/Vol Mon Inactive	User Alarm	Outlet selection switch is set to auxiliary gas outlet.		
		Connect the patient circuit to the auxiliary gas outlet or set the switch to the common gas outlet for normal operation.		
Pressure Limit Switch Failure	Minimum Monitoring	A pressure safety switch activated at a Paw <90 cmH_2O and Pmanifold <80 cmH_2O.	Ventilate manually. Monitoring is still available. Extreme control combinations may cause this alarm.	Check control settings. Refer to Troubleshooting Flowcharts (Section 7.7.5, *"High intrinsic PEEP troubleshooting"*)
Replace O2 Sensor	low	Sensor connected	O_2 < 5%	Verify O_2 calibration has been done correctly. Does calibration pass? If calibration does not pass, replace O_2 cell. If there is still a calibration problem, replace the ESIB board.
		Alarm condition becomes false.		
Schedule Service Cal	low	1. Replaced CPU board 2. Calibration data corrupted		Perform all calibrations in service mode.
Select gas outlet	medium		Patient breathing detected in ACGO -- 3 breaths detected in a 30 sec window	Check ventilator settings and ACGO switch position.
		User presses the alarm silence switch.		
Service Calibration	User Alarm	Internal calibrations are necessary for maximum accuracy.	The system is operational.	Service Mode: ▪ Perform all calibrations (refer to Section 4.3.24).
Software Error	Minimum Shutdown (*5)	Ventilator malfunction.	Ventilate manually. Monitoring is not reliable.	Replace: ▪ Software ▪ CPU board
Software Operating System Error	Immediate Shutdown	Ventilator malfunction.	Ventilate manually. Monitoring is not reliable.	Replace: ▪ Software ▪ CPU board
Software Watchdog Failure (*6)	Minimum Shutdown (*5)		Time-out or incorrect code executed	Replace the CPU board.
Sustained Airway Pressure (*6)	Minimum Shutdown (*5)	Paw > 100 cm H_2O for 10 seconds.		Check tubing for kinks, blockages, disconnects. Calibrate the flow sensors. If persists, check: ▪ bellows pop-off ▪ exhalation valve ▪ ESIB

Message	Alarm type/ Priority	Enabling Criteria / Removal Criteria	Alarm Condition	Service Repair
Sustained Paw	high	In-range Paw data available	Paw >= sustained limit for 15 seconds (*10).	Check absorber gage to see if the indicated sustained Paw is present. Check the breathing circuit. Perform flow sensor calibration. Check ESIB to CPU cabling. Replace the ESIB board. Replace the CPU board.
System Leak?	low	In-range flow data available	$V_{delivered}$ > larger of V_{TI} + Pmax(CF)+0.3(V_T) or V_{TI} + Pmax(CF)+200 Where CF = compressibility factor = 10	Check flow sensors connections. Check drive gas. If Heliox is used, check that Heliox is selected on the ventilator setup menu. Check the breathing circuit and drive circuit. Perform flow sensor calibration. Replace the flow sensors. Check ESIB to CPU cabling. Replace the ESIB board. Replace the CPU board.
		Four consecutive breaths measured with "correct volume" seen by flow sensors		
Vaux_ref Out-of-Range	Minimum Shutdown (*5)		+5.8V out-of-range	Replace the CPU board.
Ventilate Manually: XXXXXX	Minimum Shutdown -or- Minimum Monitoring			Refer to specific alarm message represented by XXXXXX.
Vext_ref Out-of-Range	Minimum Shutdown (*5)		+1.225V out-of-range	Replace the CPU board.
Volume Apnea	medium	In-range flow data available	No measured breaths in the last 30 seconds	Check that mechanical ventilation is on. Check the breathing circuit. Check ventilator settings and volume output.
		A breath is measured or apnea alarm detection off (cardiac bypass "in progress" or ACGO on).		
Volume Apnea > 2 min (*3)	high	In-range flow data available	No measured breaths in the last 120 seconds	Check that mechanical ventilation is on. Check the breathing circuit. Check ventilator settings and volume output.
		A breath is measured or apnea alarm detection off (cardiac bypass "in progress" or ACGO on).		

Message	Alarm type/ Priority	Enabling Criteria / Removal Criteria	Alarm Condition	Service Repair
V_T Not Achieved	low	In-range flow data available	$V_{TI} < V_T$ - (bigger of (0.1·V_T or 5 mL)) for 6 mechanical breaths in a row	Check ventilator settings, is P_{limit} set too low for volume setting? Check drive gas. Check the breathing circuit and flow sensor connections. Perform flow sensor calibration. Replace the flow sensors. Check ESIB to CPU cabling. Replace the ESIB board. Replace the CPU board.
		Alarm condition becomes false (i.e., 1 breath exceeding threshold) or mechanical ventilation transition on to off.		
V_{TE} > Insp V_T (*2)	low	In-range flow data available	V_{TE} > larger of (V_{TI} + 0.3·V_T or V_{TI} + 100) for 6 consecutive mechanical breaths in circle system	Check flow sensor connections. Check ventilator settings. Check the breathing circuit and flow sensor connections. Perform flow sensor calibration. Replace the flow sensors. Check ESIB to CPU cabling. Replace the ESIB board. Replace the CPU board.
		Four consecutive breaths measured with "correct volume" seen by flow sensors		

Alarm Message footnotes:

(1) These alarms will de-escalate to low priority following user acknowledgment by pressing the alarm silence switch.
(2) These alarms also have associated text displayed in the user messages window.
(3) These alarm messages do not have an elapsed time indication.
(4) This alarm is enunciated at the maximum volume level and is not silenceable.
(5) All minimum system shutdown alarms have high priority audio characteristics.
- **If the user presses the alarm silence key, the high priority audio is silenced for 120 seconds.)**
- **If the shutdown condition occurs during non-mechanical ventilation with the Bag/Vent switch in Vent or during mechanical ventilation and the user moves the Bag/Vent switch to Bag, the high priority audio is silenced for 120 seconds.**
- **If the Bag/Vent switch is moved from Bag to Vent while a shutdown condition is active and the audio silenced, the high priority audio is generated (once again).**

(6) The software will try to cause a reset of the processor after the user presses the control wheel (in response to the shutdown message).
(7) All minimum system monitoring alarms have medium priority audio characteristics.
(8) All messages appear in the user messages window.
(9) Flow sensors are also used to measure pressures.
(10) The sustained pressure threshold is calculated from the pressure limit setting. When mechanical ventilation is on, the sustained limit is calculated as follows: for pressure limits < 30 cmH_2O, the sustained pressure limit is 6 cm H2O; for Plimit between 30 and 60 cmH_2O, the sustained limit is 20% of the pressure limit (Plimit); for pressure limits >60 cmH_2O, the sustained pressure limit is 12 cm H_2O. If both PEEP and Mechanical ventilation are on, the sustained pressure limit increases by PEEP - 2 cmH_2O (the compensated weight of the bellows). When mechanical ventilation is off, the sustained pressure limit is calculated as follows: for pressure limits ≤60 cmH_2O, the sustained pressure limit is 50% of the pressure limit (Plimit); for pressure limits >60 cm H_2O, the sustained pressure limit is 30 cmH_2O.

7.6 Mechanical/electrical troubleshooting guide

The power supply circuits are located on two modules: the AC to DC converters are on a universal power supply (PS), the regulated power circuits are integrated into the CPU board (IntCPU).

For power supply test point, refer to Section 7.8.

Symptom	Probable cause	Action
System on, AC LED on, no display		Refer to section 7.7.2, No display troubleshooting.
AC LED not on	1. Power cord	1. Is the cord plugged in?
	2. AC power	2. Is the power outlet o.k.?
	3. Circuit breaker	3. Check main circuit breaker in the AC Inlet module.
	4. 50-pin cable, front panel to CPU board	4. Check cable connection.
	5. Power supply board	5. Verify output voltages of power supply. Replace CPU board.
	6. Membrane switch LED	6. Replace membrane keyboard.
No battery	1. Battery cable disconnected	1. Connect cable.
	2. Battery power less than 7V while running on battery power	2. Charge battery.
	3. Battery fuse blown	3. Replace battery fuse.
	4. Defective battery	4. Replace battery.
Alarms display, but not audible	1. Audio set too low	1. Adjust audio from menu.
	2. Speaker cable	2. Ensure cable is plugged in.
	3. Speaker	3. Replace speaker.
	4. CPU board	4. Replace CPU board.
Bellows does not expand or tends to collapse during ventilation.	1. Leak in the breathing circuit	1. Check breathing circuit and absorber for leaks.
	2. Bellows not installed properly	2. Check the bellows to rim attachment. Make sure bellows ring roll is into groove under rim.
	3. Tear or leak in bellows.	3. Check the entire surface of the bellows. Pay close attention to the angles in the convolutions.
	4. Insufficient fresh gas flow	4. Check that settings on flowmeters are adequate.
	5. Improperly functioning pressure relief valve in bellows assembly	5. Check the pressure relief valve and seal for damage. Reseat.
Bellows distended and/or slips off base.	1. Bellows retention problem	1. Check/replace bellows.
	2. Bellows assembly exhaust restricted	2. Check the waste gas scavenging system for high vacuum or blockage.
	3. Bellows assembly pressure relief valve problem	3. Control port plugged or drive gas inlet hose blocked.
Continuous flow of supply gas before machine is turned ON.	1. External hose leak.	1. Check hose.
	2. GIV leak.	2. Check/repair GIV solenoid.

Bellows does not descend during inspiration.	1. Normal 2. Leak in breathing system.	1. If the fresh gas flow is greater than tidal volume, the bellows may not descend. 2. Check for leaks in drive gas circuit. Are twin tube assemblies on the pneumatic engine lifted all the way into the interface cuff?
Ventilator will not turn on when remote on/off switch is turned on and AC LED is on	1. Machine interface harness 2. Remote on/off switch 3. Power supply board	1. Ensure cable is plugged in properly at switch and CPU board (J5). 2. Replace switch 3. Replace power supply board
Erratic pressure waveform Slow exhalation pressure release	▪ Slight to moderate valve leakage ▪ O-Ring Seal, Housing to Main Manifold ▪ Alignment of seat and seal after assembly ▪ Loose mounting screws ▪ Exhalation valve assembly	1. Check operation of drive gas check valve. 2. Replace drive gas check valve. 3. Inspect and reassemble the exhalation valve assembly; make sure to put it together correctly.
Mechanically delivered volumes decrease significantly immediately following use of O_2 Flush.	Failure to cease Volume Compensation when Flush is used. ▪ Flush switch	1. Go to "Display I/O signals" screen in Service Mode (Section 4.3.14). Press and release flush button. Look for proper switch action. 2. Check wire harness connections at switch and ESIB. 3. Replace CPU board.

7.7 Troubleshooting Flowcharts

7.7.1 Ventilator assessment process

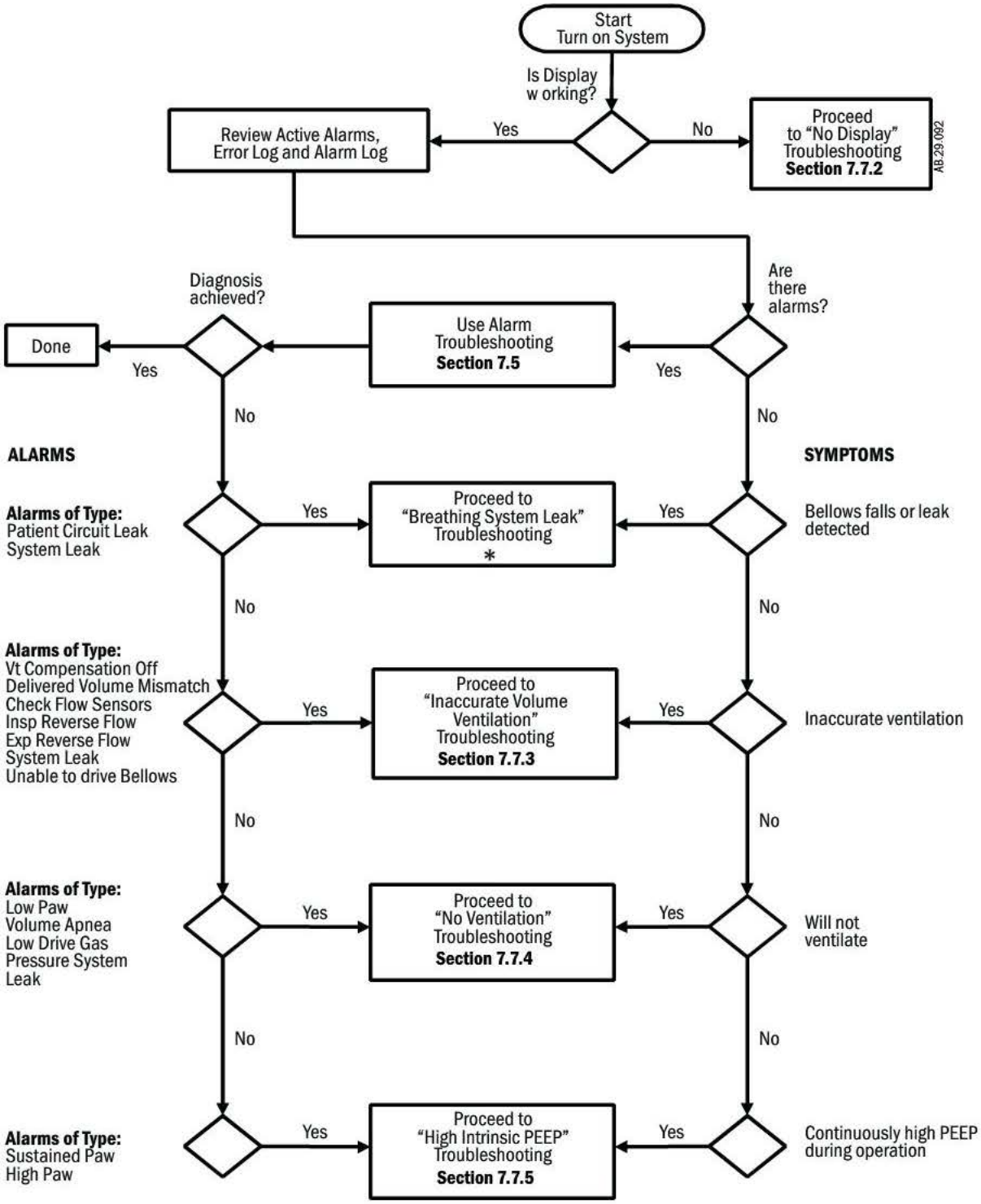

* Refer to Section 7.2, *"Breathing System Leak Test Guide"*.

7.7.2 No display troubleshooting

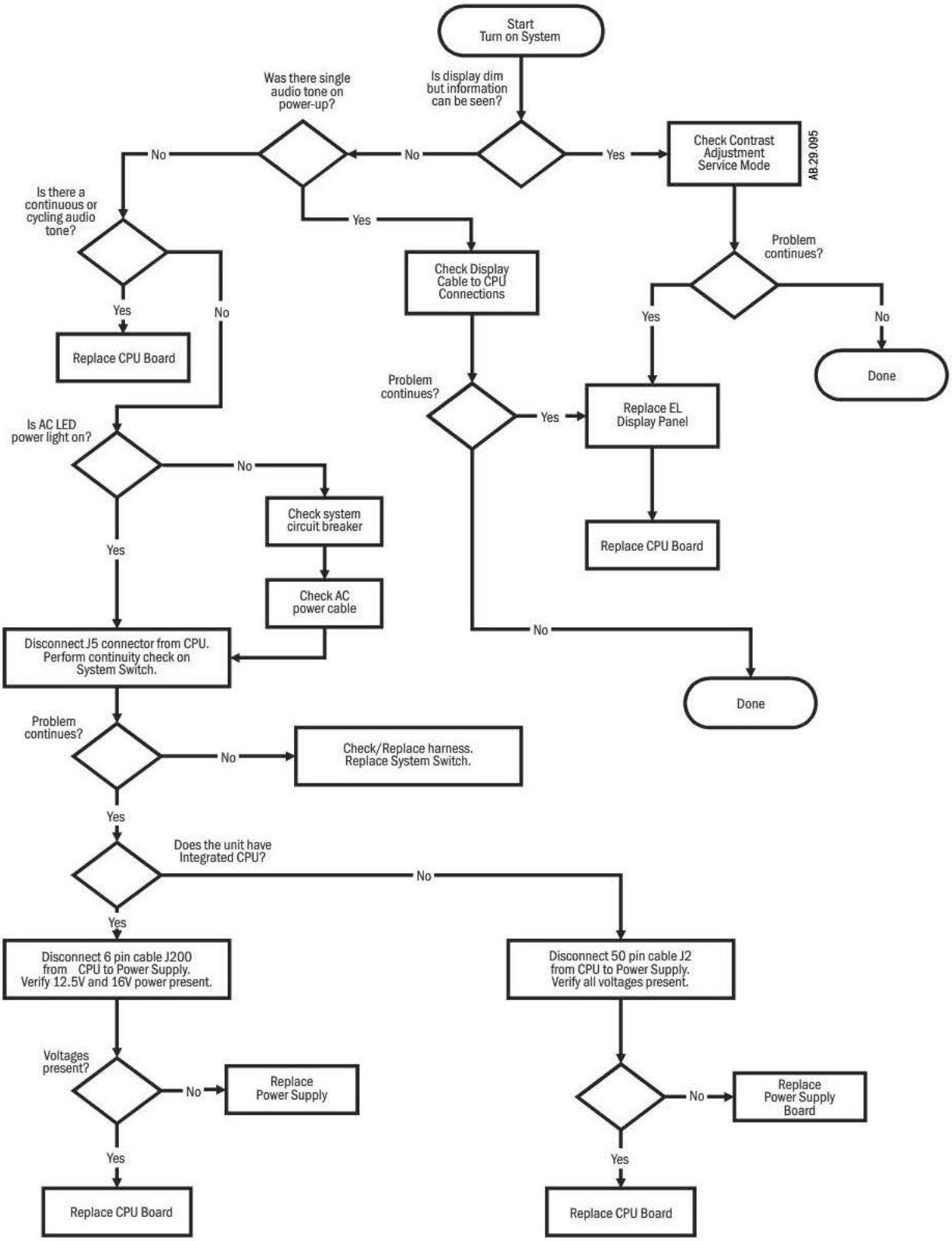

7.7.3 Inaccurate volume ventilation troubleshooting

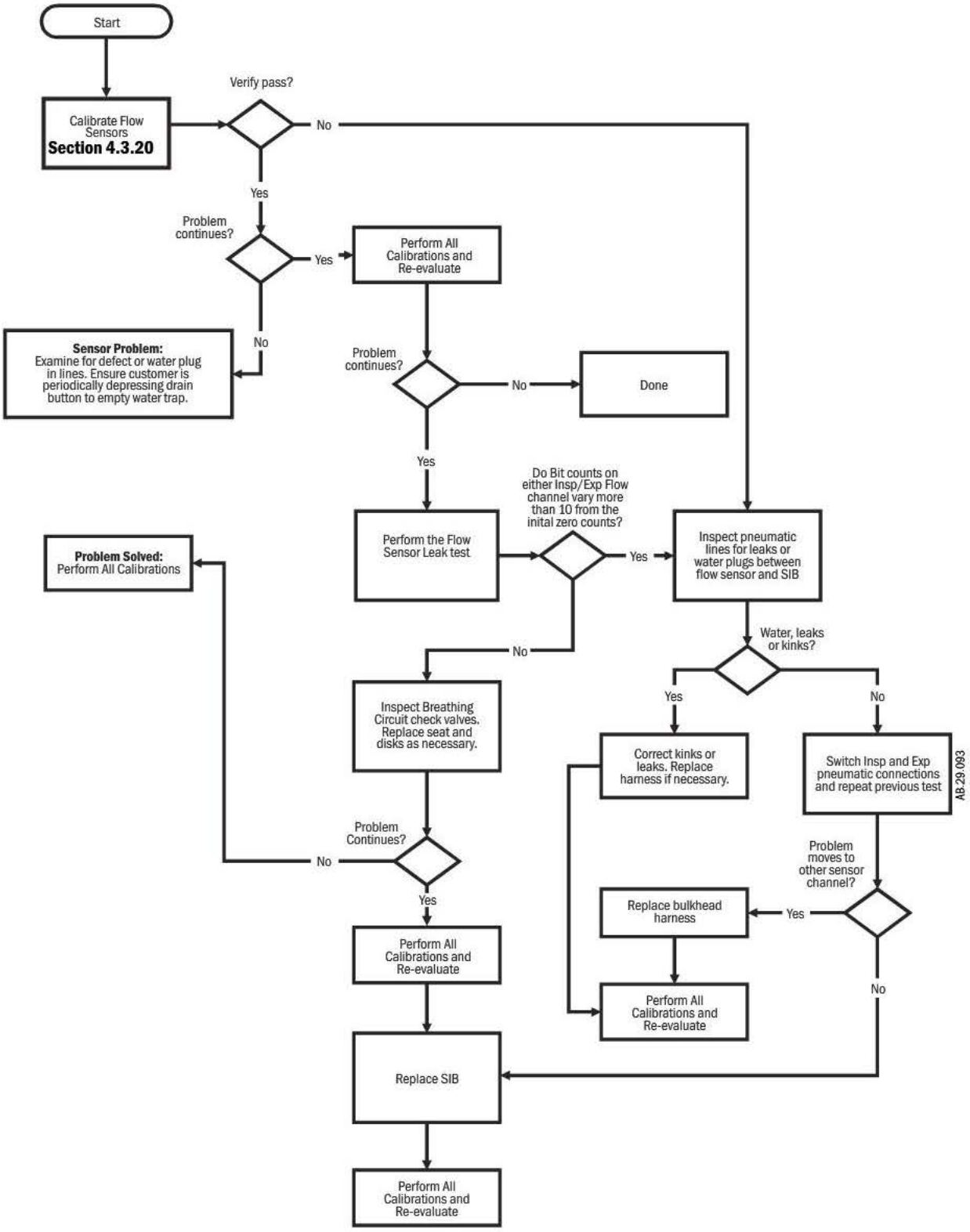

7.7.4 No ventilation troubleshooting

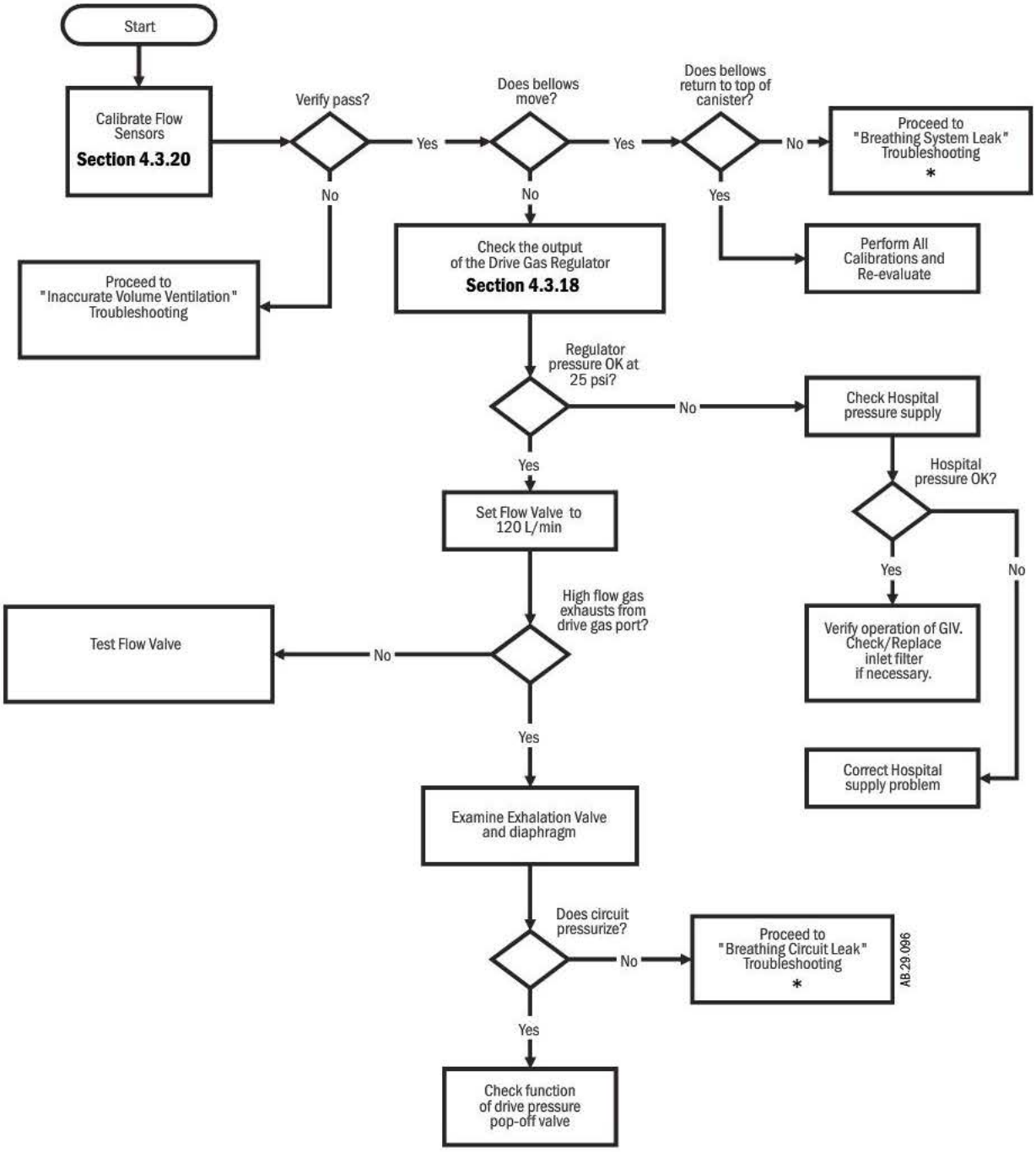

* Refer to Section 7.2, *"Breathing System Leak Test Guide"*.

7.7.5 High intrinsic PEEP troubleshooting

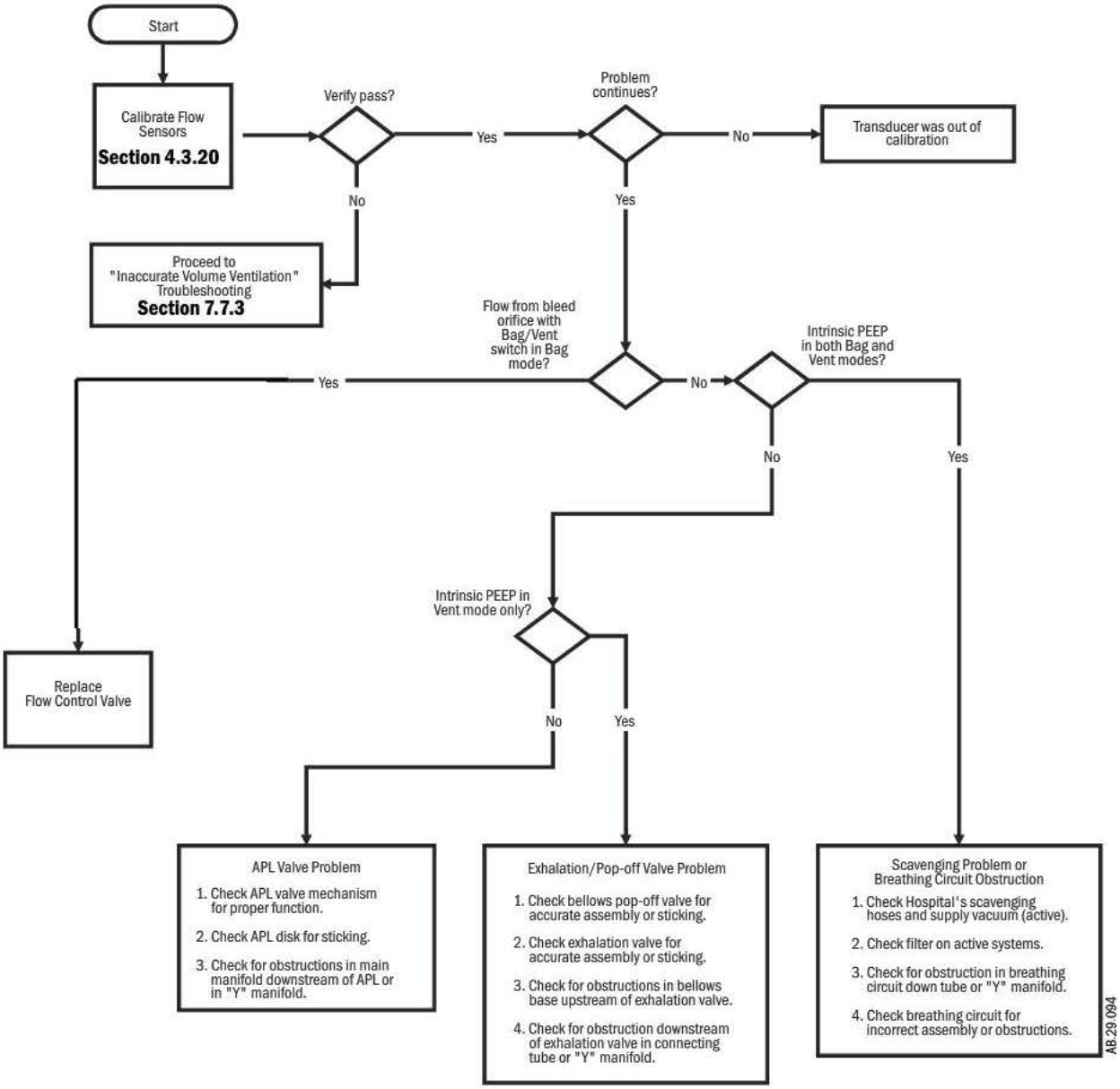

7.8 Power supply test points

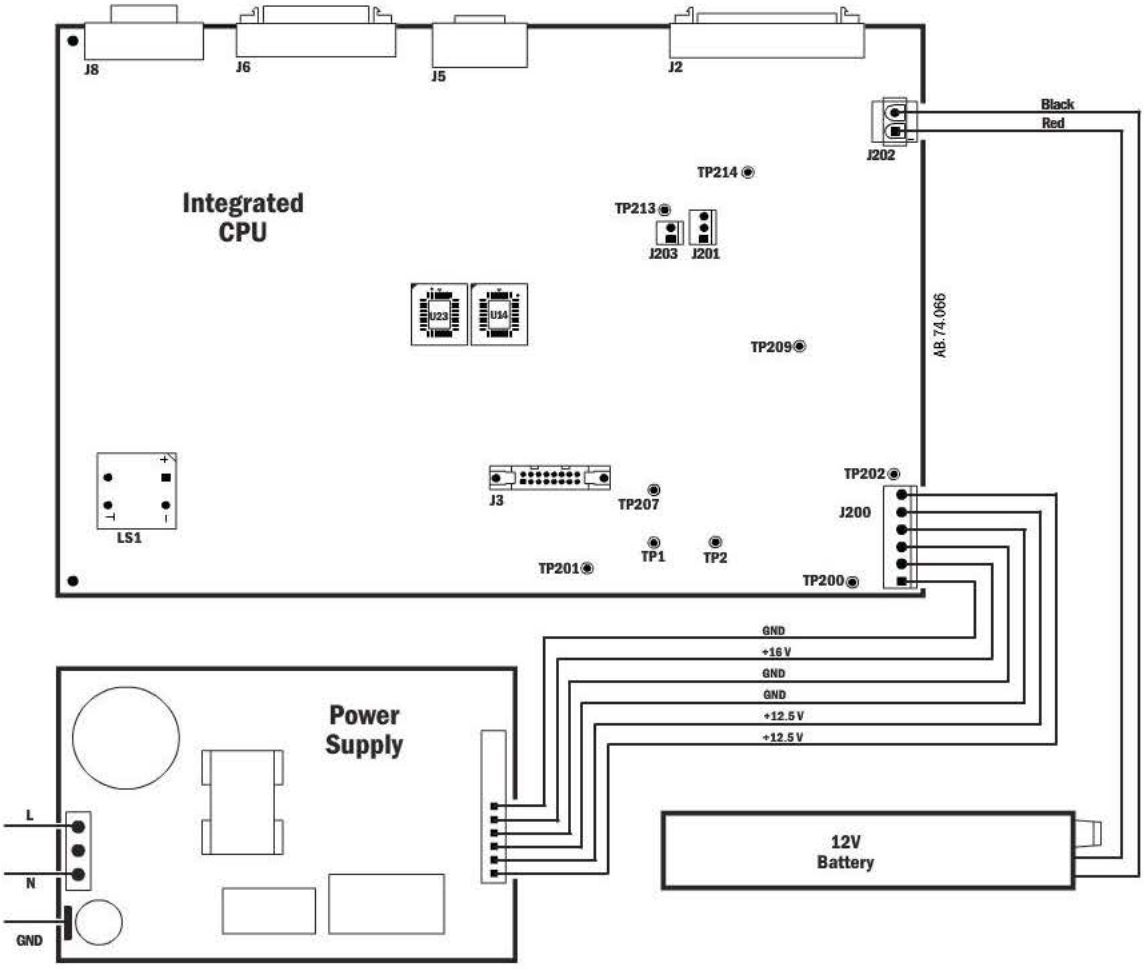

TP	Name	Typical Value	Description
1	+15V	+15V	Analog +15V supply
2	-15V	-15V	Analog -15V supply
200	VCHGR	+16V	From power supply
201	PGND	0V	Power (chassis) ground
202	VMAIN	+12.5V	From power supply
207	AGND	0V	Analog ground
209	+5.8V	+5.8V	Supply for inlet valve, flow valve, speaker
213	VH_EL	+14.5V	Supply for EL display
214	+12VLP	+12V	Supply for light package

Note The power supply outputs are +16 volts and +12.5 volts.

- The +16 volts is used to charge the battery. It is only available when the machine is connected to an AC supply.
- The +12.5 volts is used to generate the regulated voltages on the CPU board. In case of power outage, the CPU power circuits are supplied by the battery.

8 Software Installation

System software resides on two EPROMS (U14 and U23) on the CPU board.

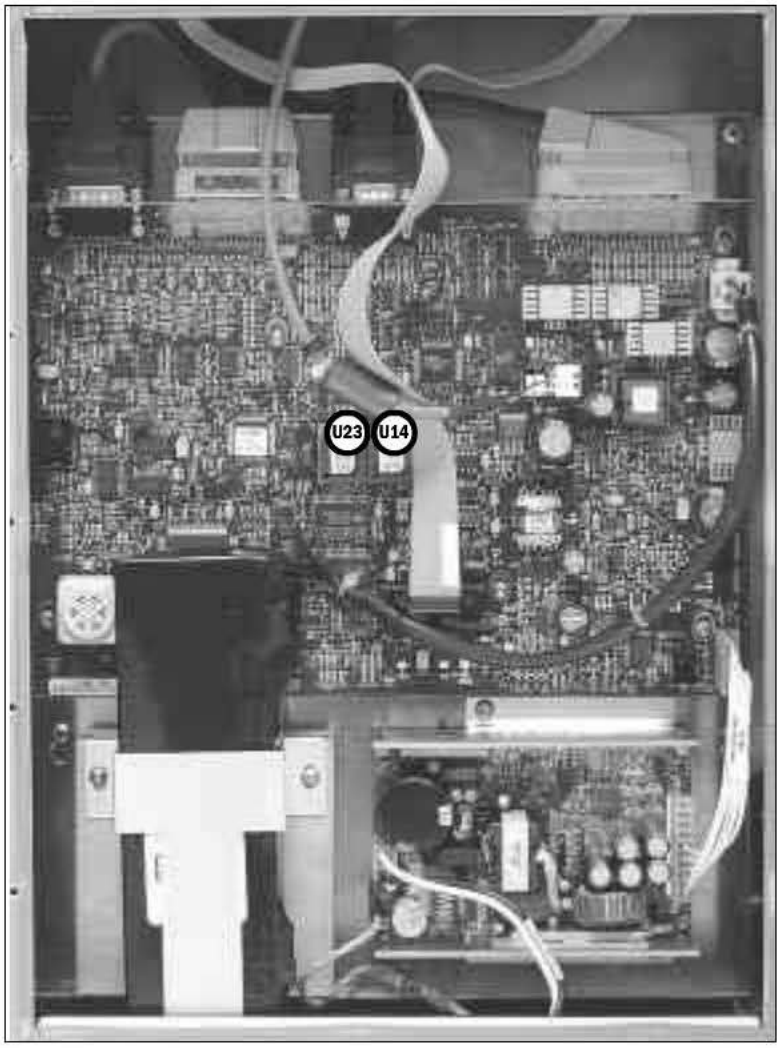

To upgrade the software, you must install new EPROMs.

- To order software, refer to *Section 10.1.1*
- To access the CPU board, refer to *Section 9.23.1*.
- To replace the EPROMs, refer to *Section 9.23.2*

9 Repair Procedures

In this section This section covers the repair and replacement procedures for components of the Aespire 7900 anesthesia machine.

9.1 How to bleed gas pressure from the machine 9-3

9.2 How to remove the rear panels 9-4

9.2.1 To remove the rear upper panel 9-4

9.2.2 To remove the lower access panels 9-4

9.3 How to remove the tabletop 9-5

9.4 Replace pipeline inlet filter 9-6

9.4.1 Replace pipeline inlet check valve 9-6

9.5 Change drive gas 9-7

9.6 Service the cylinder supply modules 9-8

9.6.1 Tightening procedure for high-pressure tube fittings 9-8

9.6.2 Replace primary regulator module (complete replacement) 9-8

9.6.3 Replace cylinder inlet filter 9-9

9.6.4 Replace cylinder check valve 9-9

9.7 Replace system switch assembly 9-10

9.8 Service the flowmeter module 9-12

9.8.1 Remove front flowmeter panel shield 9-12

9.8.2 Remove flowtubes for cleaning or replacement 9-12

9.8.3 Remove complete flowmeter head 9-14

9.8.4 Replace flowmeter modules 9-15

9.8.5 Replace flowmeter frame 9-19

9.8.6 Replace O_2 supply switch 9-20

9.8.7 Checkout procedure for O_2 supply switch 9-20

9.8.8 Replace secondary regulator manifold or balance regulator manifold 9-21

9.8.9 Replace O_2 or N_2O needle valves (on machines with N_2O) 9-22

9.8.10 Replace an Air needle valve on all machines or an O_2 needle valve on machines without N_2O 9-24

9.9 Service vaporizer manifold parts 9-25

9.9.1 Repair manifold port valve 9-25

9.9.2 Checkout procedure for manifold port valve 9-26

9.9.3 Replace vaporizer manifold check valve 9-27

9.9.4 Replace vaporizer pressure relief valve 9-29

9.9.5 Replace vaporizer manifold 9-30

9.10 Replace ACGO selector switch 9-31
9.11 Clean or replace ACGO port flapper valve 9-33
9.12 Reconfigure sample gas return line 9-34
9.13 Replace the APL valve 9-35
9.14 Replace the bag support arm 9-36
9.14.1 Servicing the bag support arm 9-37
9.14.2 Replace friction pad in lower bag arm assembly 9-38
9.14.3 Replace bag port housing 9-39
9.15 Replace auxiliary O_2 flowmeter 9-40
9.16 Replace the suction control module 9-41
9.16.1 Front panel method 9-41
9.16.2 Rear panel method 9-42
9.17 Replace ABS breathing system components 9-43
9.17.1 Replace Bag/Vent switch assembly 9-43
9.17.2 Replace bellows base latch assembly 9-44
9.18 Replace casters 9-45
9.19 Replace task light and switch 9-46
9.19.1 To replace the task-light switch 9-46
9.19.2 To replace the task-light circuit board 9-46
9.20 Replace the display cable (long arm) 9-47
9.20.1 Removing the display arm 9-47
9.20.2 Replacing a display cable 9-47
9.20.3 Installing the long arm 9-48
9.21 Replace the display cable (folding mount) 9-49
9.21.1 Removing the folding mount 9-49
9.21.2 Replacing a display cable 9-49
9.21.3 Installing the folding mount 9-50
9.22 Aespire 7900 Control/Display module 9-51
9.23 Electrical enclosure components 9-54
9.23.4 Battery 9-58
9.23.5 Replace CPU cables 9-59
9.24 Servicing the Vent Engine 9-60
9.24.1 To remove the Vent Engine 9-61
9.24.2 Replacing Vent Engine components 9-62
9.24.3 Replacing GIV components 9-63

⚠ **WARNING** To prevent fires:

- Use lubricants approved for anesthesia or O_2 equipment, such as Krytox.
- Do not use lubricants that contain oil or grease; they burn or explode in high O_2 concentrations.
- All covers used on the system must be made from antistatic (conductive) materials. Static electricity can cause fires.

⚠ Obey infection control and safety procedures. Used equipment may contain blood and body fluids.

⚠ A movable part or a removable component may present a pinch or a crush hazard. Use care when moving or replacing system parts and components.

⚠ Some internal parts have sharp edges and can cause cuts or abrasions. Use care when servicing internal components.

⚠ When servicing the ventilator, extreme care must be taken to avoid introducing foreign debris, particularly metal chips generated by screw threads, into the pneumatic flow passages of the ventilator. Failure to do so can result in damage to the flow valve and possible injury to the patient.

⚠ After repairs are completed, always perform the checkout procedure. Refer to Section 3 of this manual.

9.1 How to bleed gas pressure from the machine

Before disconnecting pneumatic fittings, bleed all gas pressure from the machine.

1. Set the system switch to On.
2. Close all cylinder valves and disconnect all pipeline supplies from the source.
   Note: If the machine includes N_2O, do not disconnect the O_2 pipeline.
   If pipeline O_2 is not available, open the O_2 cylinder valve.
3. Turn the flow controls for all gases (except O_2) at least one turn counterclockwise.
4. Ensure that all cylinder and pipeline gauges read zero before proceeding.
   - For machines with N_2O, disconnect the O_2 pipeline supply from the source (or close the O_2 cylinder valve).
   - Press the O_2 flush button to bleed O_2 from the system.
5. Set the system switch to Standby.

9.2 How to remove the rear panels

You must remove the rear upper panel to repair or replace many of the machine's components. To access the 3rd cylinder supply (if equipped) you must remove the lower access panels.

9.2.1 To remove the rear upper panel

1. Bleed all gas pressure from the machine (Section 9.1).
2. Ensure that all cylinder and pipeline gauges read zero before proceeding.
3. Disconnect all electrical cables.
4. To remove the rear panel, fully loosen the three captive screws that hold the panel in place. Remove the panel.
   - If the machine includes integrated suction, disconnect the two tube fittings from the overflow safety trap manifold.
   - If the machine includes electrical outlets, lower the panel and place it so that it does not stress the power cable.

9.2.2 To remove the lower access panels

1. Disconnect the power cord from the AC mains supply.
2. Bleed all gas pressure from the machine (Section 9.1).
3. Ensure that all cylinder and pipeline pressures read zero before proceeding.
4. If present, remove the inboard cylinders.
5. Remove the small upper access panel (**A**) to access the serial cable/connectors.

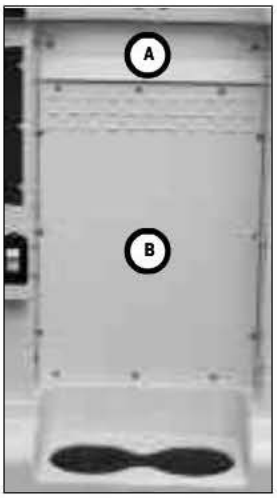

6. Remove the large lower access panel (**B**) to access the electrical enclosure.

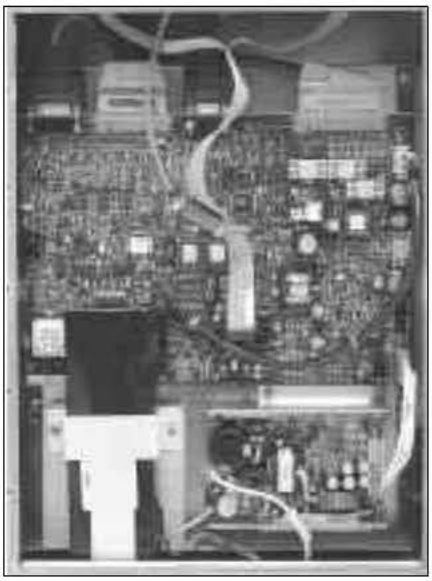

9.3 How to remove the tabletop

The tabletop is held in place with five captive screws along the periphery of the pan assembly (accessed from below the rim of the tabletop).

- One screw (**A**) is in a deep recess at the right-rear corner of the tabletop.
- Two screws (**B**) are at the front of the tabletop: one screw is at the right corner of the tabletop, one is near the O_2 Flush button.
- To access the remaining two screws (**C**), you must remove the ABS: one screw is at the left corner of the tabletop, one is near the APL Valve.

9.4 Replace pipeline inlet filter

1. Remove the pipeline inlet fitting.
2. Pull the pipeline inlet filter out of the fitting. The o-ring should come out with the filter.

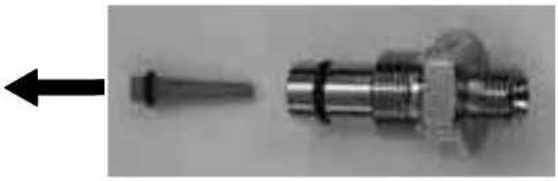

3. Install the new pipeline inlet filter in the pipeline inlet fitting. The new filter comes with an o-ring.

9.4.1 Replace pipeline inlet check valve

1. Remove the rear panel (Section 9.2).
2. Remove the pipeline inlet fitting.
3. The Air and O_2 pipeline manifolds include a drive gas connection at the back of the manifold. Remove the drive gas tube or plug to access the check valve.
4. From the back of the pipeline manifold, use a thin tool to push out the check valve. (For an N_2O manifold, you will have to carefully apply pressure at the outlet of the manifold – with a syringe for example – to gently force the check valve out of the manifold).

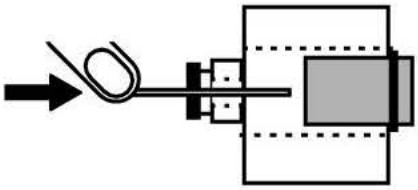

5. Push the new check valve into the opening, using the same thin tool. The new check valve includes an o-ring – orient it toward the pipeline inlet. **Note:** Make sure to push the new check valve all the way back into the opening until it bottoms out on the shoulder.

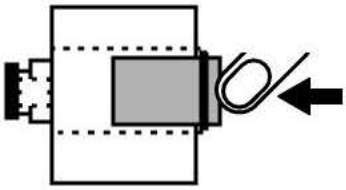

6. Install the pipeline inlet fitting.
7. Perform the checkout procedure (Section 3).

9.5 Change drive gas

⚠ **CAUTION** If you change the drive gas, you must also change the drive gas selection on the service mode ***System Configuration*** setup screen (Section 4.3.3).

- If the drive gas selection and the actual drive gas do not agree, volumes will not be correct.

The ventilator will alarm with the message "Low Drive Gas Press" if the selected drive gas pressure, either O_2 or Air, is lost.

1. Remove the rear panel (Section 9.2).

Note: The O_2 and Air pipeline manifolds have a drive gas connection at the back. The connection not in use is plugged.

2. Remove the plug from the new connection.
3. Disconnect the drive gas hose from the present connection.
4. Install the plug in this connection (pull on the plug to ensure that it is locked into the fitting).
5. Reroute the drive gas hose so that it does not cause kinks in other tubing.
6. Connect the drive gas hose to the new connection (pull on the hose connector to ensure that it is locked into the fitting).
7. Do a high-pressure leak test (Section 3.3).
8. Enter the service mode and select the correct drive gas.
9. Test the primary regulator. Verify that it functions within specifications now that it will be supplying drive gas to the ventilator (Section 5.1).
10. Perform the checkout procedure (Section 3).

9.6 Service the cylinder supply modules

⚠ WARNING Be careful not to expose internal components to grease or oil (except Krytox or equivalent).

9.6.1 Tightening procedure for high-pressure tube fittings

The cylinder pressure gauge is connected to the cylinder supply through a copper tube with fittings at both ends. Use the following tightening procedure whenever you are replacing a cylinder supply or a cylinder pressure gauge.

1. Insert the tubing into the fitting until the ferrule seats in the fitting.
2. Tighten the nut by hand.
3. Continue tightening the nut with a wrench until it reaches the original position (about 1/4 turn). You will feel an increase in resistance at the original position.
4. After reaching the original position, tighten the nut just slightly.

Note If you are installing a new tube that has not been tightened before, tighten the nut with a wrench an additional 3/4 of a turn after the nut is finger tight.

9.6.2 Replace primary regulator module (complete replacement)

1. Bleed all gas pressure from the machine (Section 9.1).
2. Ensure that all cylinder and pipeline gauges read zero before proceeding.
3. Remove the rear panel (Section 9.2).
4. Disconnect the high-pressure cylinder gauge fitting.
5. Disconnect the output tube fitting.
6. Remove the three mounting screws and lockwashers.
7. To reassemble, perform the previous steps in reverse order.
   - Tighten the high-pressure fitting as detailed in Section 9.6.1
   - Pull on the cylinder output fitting to ensure it is locked in place.
8. Check the output of the regulator BEFORE you install the rear panel. Adjust if necessary (Section 5.1).
9. Perform the checkout procedure (Section 3).

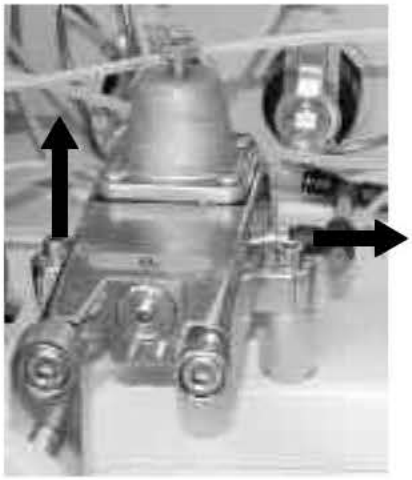

9.6.3 Replace cylinder inlet filter

1. Open the cylinder yokes.
2. Remove the inlet adapter from the cylinder yoke, using a 4 mm hex wrench.

   Note: A brass retaining ring keeps the filter inside the inlet adapter.
3. Thread a 6-mm screw (two turns only) into the brass retaining ring and pull it out.

⚠ **CAUTION** Be careful not to crush the filter. Do not thread in the screw more than two full turns.

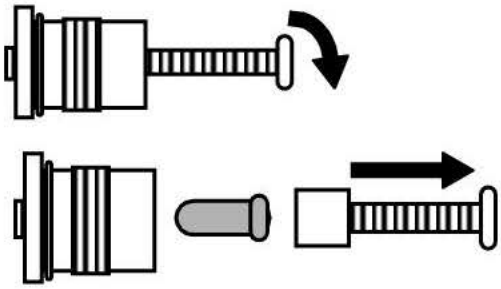

4. Remove the filter.
5. Install the new filter and brass retaining ring.
6. Install the inlet adapter in the cylinder yoke.
7. Perform the checkout procedure (Section 3).

9.6.4 Replace cylinder check valve

The cylinder check valve is not a replaceable item. If the check valve is defective, you must replace the complete cylinder supply module.

9.7 Replace system switch assembly

1. Bleed all gas pressure from the machine (Section 9.1).
2. Ensure that all cylinder and pipeline gauges read zero before proceeding.
3. Remove the tabletop (Section 9.3).
4. Remove the gauge panel mounting screws and move the panel forward to access the system switch.

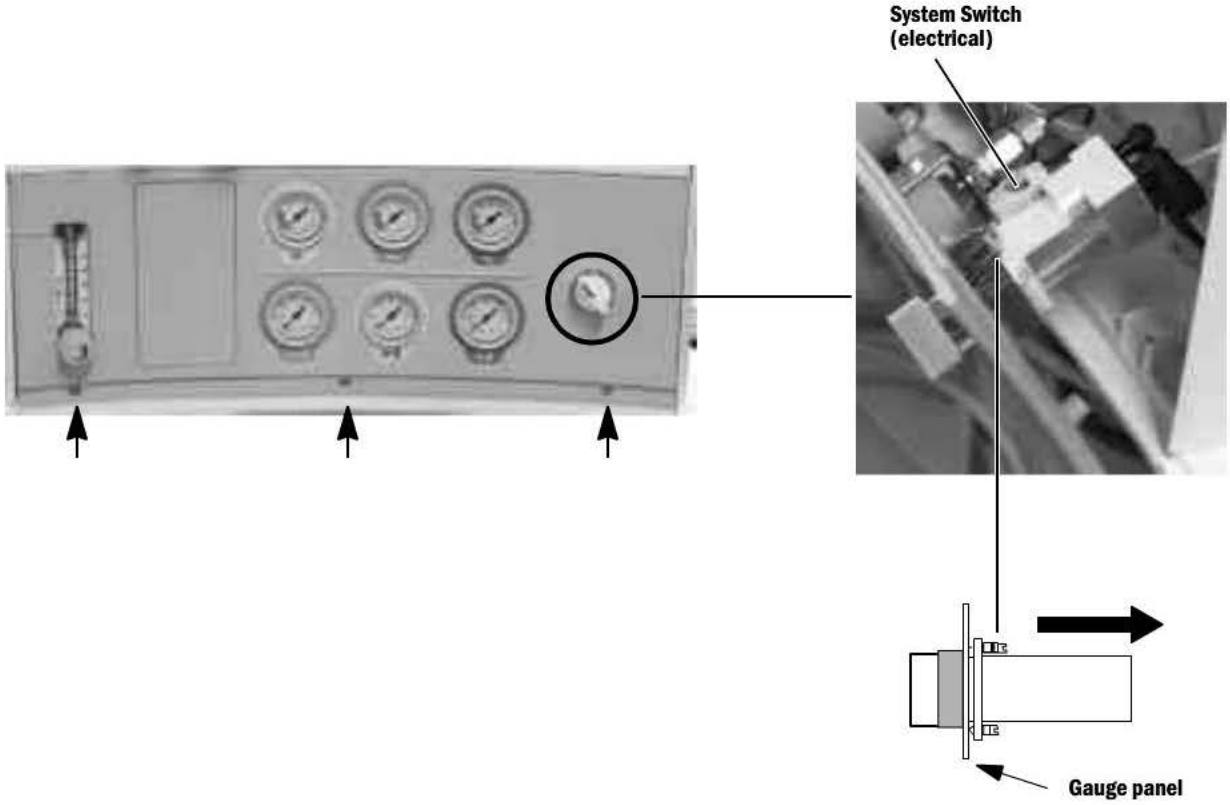

5. Disconnect the wires from the electrical switch.
6. Back out the system switch mounting screws just enough to allow the knob collar to be released.
7. While holding the switch assembly, push in the knob and turn it counterclockwise.
8. Pull the knob and collar out from the front and remove the switch assembly.

9. Install the replacement switch assembly:
   a. Loosen the two outside screws on the electrical module.
   b. Insert the wires in the electrical module and tighten the screws.
   c. Pull the wires on the electrical module to ensure that there is a good connection.
   d. Turn back the system switch mounting screws until their tips recede.
   e. Orient the switch assembly with the Air fittings toward the right and the O_2 fittings toward the left.
   f. Install the switch assembly through the gauge panel.
   g. Push the knob collar in with the indicator up and turn it clockwise until it locks.
   h. Tighten the mounting screws. Make sure that the top edge of the switch assembly is parallel to the top edge of the gauge panel.
   i. Transfer the tubing from the old system switch to the new system switch on the pneumatic module (pull on the tubing to ensure that it is locked into the module).

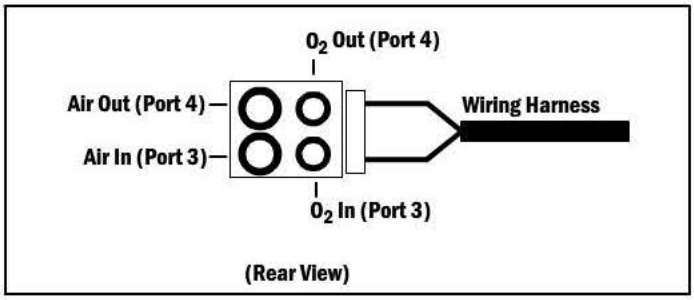

10. Test the replacement switch assembly:
    a. Connect Air and O_2 supplies.
    b. Connect the power cable to an electrical outlet.
    c. Set the system switch to On.
    d. Increase the O_2 and Air flow. Make sure that gas flows.
    e. Make sure that you do not feel or hear any leaks.
    f. Make sure that the display comes On.
    g. Set the system switch to Standby.
    h. Make sure all gas flow stops and the display turns Off.
11. Reinstall the gauge panel and the tabletop.
12. Perform the checkout procedure (Section 3).

9.8 Service the flowmeter module

9.8.1 Remove front flowmeter panel shield

1. Bleed all gas pressure from the machine (Section 9.1).
2. Ensure that all cylinder and pipeline gauges read zero before proceeding.
3. The flowmeter panel is held in place with two latching tabs at the right side. To remove the panel, release each latch by pushing it toward the center of the panel with a thin rod (3-mm hex wrench) through the access hole in the shroud.

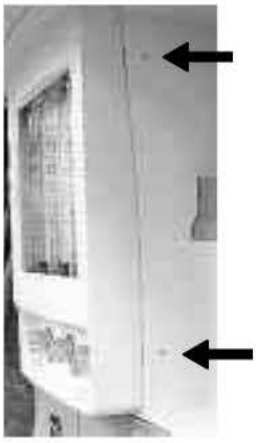

4. Remove the panel.
5. To reinstall the panel, engage the retaining tabs on the left side and press the right side against the shroud to latch it in place.

9.8.2 Remove flowtubes for cleaning or replacement

1. Remove the front flowmeter panel shield (Section 9.8.1).
2. To remove a flowtube assembly, push up on the tube just enough to clear the bottom seal, pull out from the bottom until the tube clears the flowtube module, then pull down slowly to release it from the module.

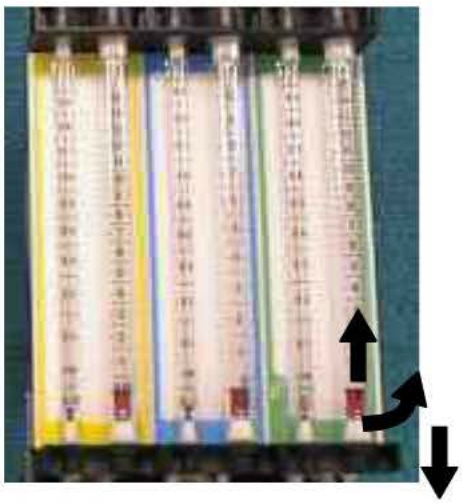

⚠ WARNING Floats are calibrated to a specific tube. Keep each float with its tube. Replace tube and floats together. Interchanging floats can cause incorrect readings. Disassemble the flowtube assemblies only when service is required. Excessive cleaning can remove the antistatic coating from inside the tube. Damage to the float requires replacement of the entire flowtube.

3. Disassemble the flowtube assembly.

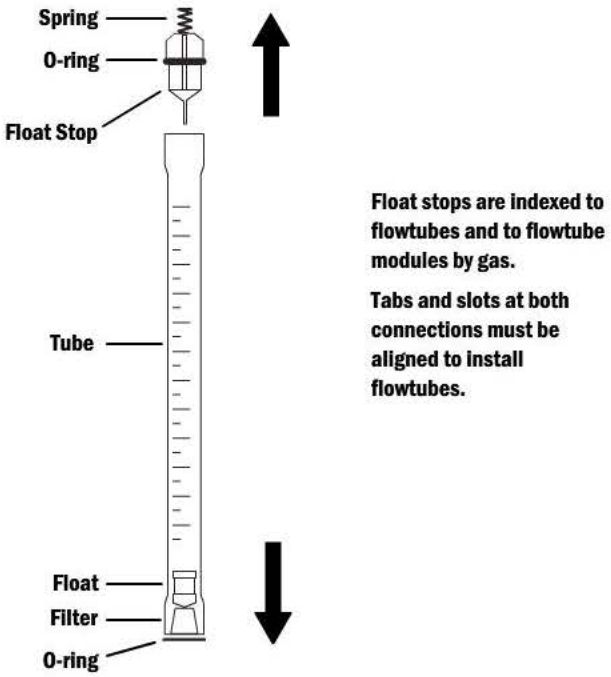

4. Completely clean, rinse, and dry the flowtube. Use hospital grade alcohol and a flowtube brush.
5. Replace stops, filter and o-rings, as necessary. Lightly coat all o-rings with Krytox. Be careful to not get any Krytox on the bottom of small flowtube float stops.
6. Reassemble the flowtube assembly.
7. Insert the flowtube, spring side first, into the top of the module with the scale oriented forward.
8. Push up and slide the bottom of the flowtube into place on the bottom o-ring. It may be necessary to rotate the tube to engage the index tabs.

   Note: Be sure o-rings are inserted completely into the collar.
9. Push down on the tube to seat the bottom o-ring.
10. Reinstall the front flowmeter panel shield.
11. Perform the checkout procedure (Section 3).

9.8.3 Remove complete flowmeter head

1. Remove the rear panel (Section 9.2).
2. Disconnect the tubing at the rear of each gas module. The following example is a back view of the flowmeter head.

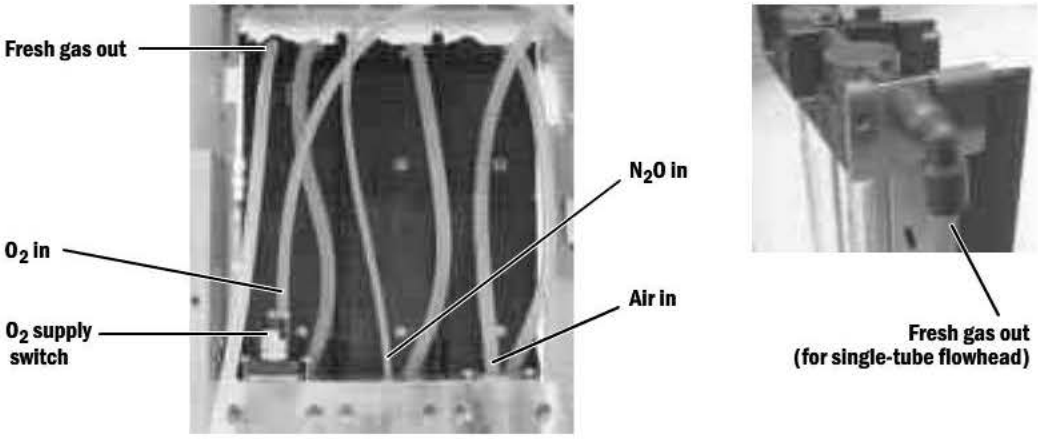

3. Disconnect the O_2 supply switch harness. Note position of switch connections so that you can reassemble correctly later.

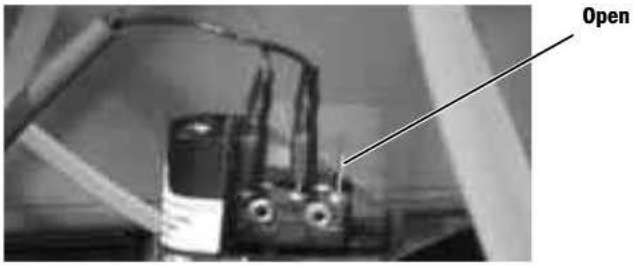

4. Remove the front flowmeter panel shield (Section 9.8.1).
5. Remove the mounting screw from each regulator manifold.

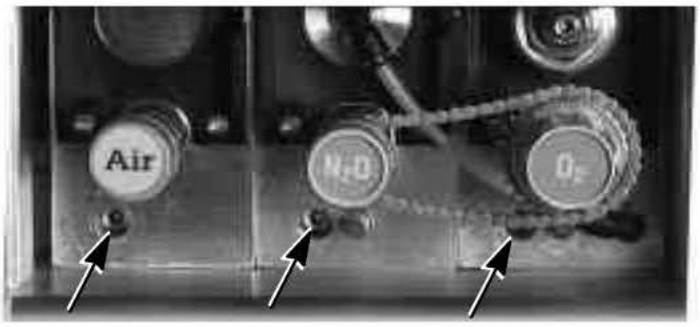

6. Pull the flowhead forward.
7. To reinstall, perform the previous steps in reverse order (pull on the tubing to ensure it is locked into the fittings).
8. Check for proper alignment of the front flowmeter panel. If any of the needle valve knobs rub against the flowmeter panel, reposition the flowhead to allow for proper clearance.
9. Perform the checkout procedure (Section 3).

9.8.4 Replace flowmeter modules

1. Remove the complete flowmeter head (Section 9.8.3).
2. Refer to the following illustrations. Note that these illustrations show ANSI flowmeter module positions. The order is reversed in ISO machines.

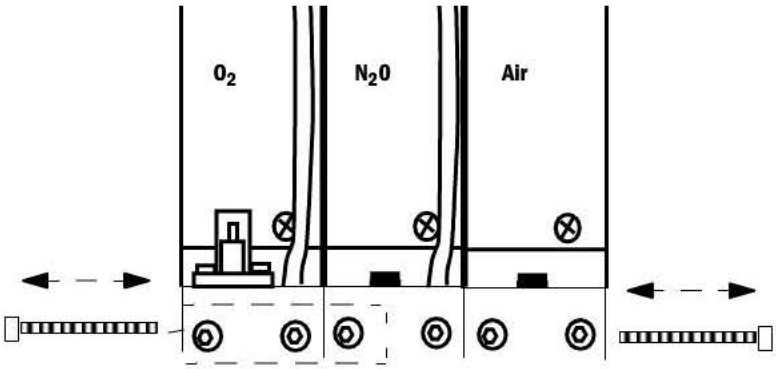

O_2/Air modules

O_2/Air flowmeter modules are connected at the bottom with a long screw (**A**) and nut (**B**) that is recessed. To remove, retain nut while loosening screw.

Note

The flowmeter modules are held together at the top with a u-clip. To separate the modules, pivot the modules (front to back) 45 degree. The u-clip will disengage and allow the modules to separate.

The flowmeter modules are interconnected at the top by a spacer tube. The o-ring on the spacer tube makes a leak-tight seal.

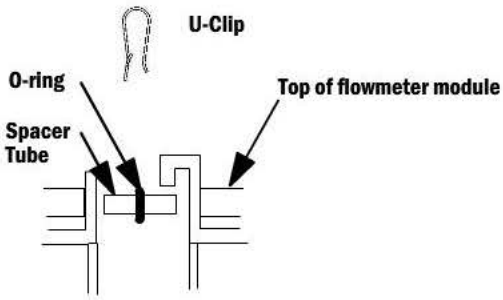

Single-tube flowhead

The outlet fitting for a single-tube flowhead is not an integral component of the O_2 flowmeter. The outlet fitting is a separate component that includes an o-ring seal and is held in place with two u-clips.

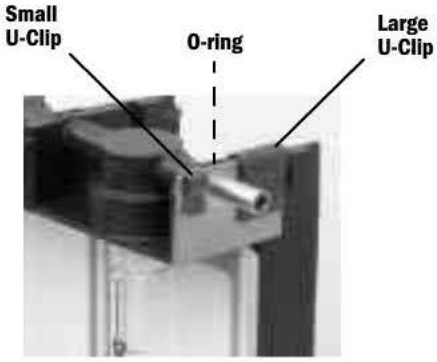

3. To remove the Air flowmeter module:

a. Remove the screw located on the side of the Air flowmeter module.

b. Hold the flowmeter module with the flowtubes facing you.

c. Grasp the outer modules at the bottom of the regulator manifold and push the left module away from you until the u-clip pops off and the module separates from the other assemblies.

d. Pull the modules sideways to separate them at the top.
Save the u-clip, spacer tube, and the o-ring for reassembly.

4. To remove the O_2 or N_2O flowmeter module:

a. Set the O_2 and N_2O needle valves to their maximum position (counterclockwise).

b. Loosen the set screws on the N_2O knob, then remove the knob.

c. Loosen the set screws on the N_2O sprocket and the O_2 knob.

d. To remove, grasp the O_2 knob/sprocket, N_2O sprocket, and chain as an assembly. Remove as an assembly.

e. Remove the spacer from the N_2O needle valve spindle.

f. Remove the pilot tube going to the balance regulator.

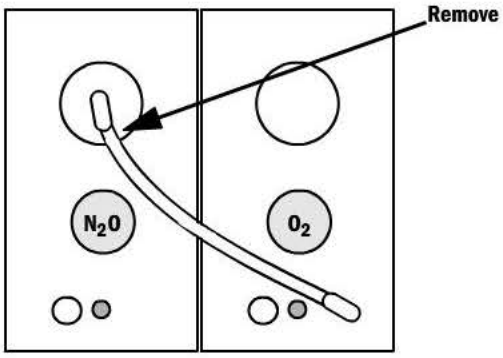

g. The O_2 and N_2O flowmeter modules are held together by a single screw. Remove the screw located on the side of the O_2 flowmeter module.

h. Hold the flowmeter modules with the flowtubes facing you.

i. Grasp the modules at the bottom of the regulator manifolds and push the left module away from you until the N_2O module separates from the O_2 module.

j. Pull the modules sideways to separate them at the top.
Save the u-clip, spacer tube, and the o-ring for reassembly.

5. To reassemble the flowmeter modules, perform the previous steps in reverse order. **Note:** The u-clips must be reinstalled with the barbed leg to the left as viewed from the front.

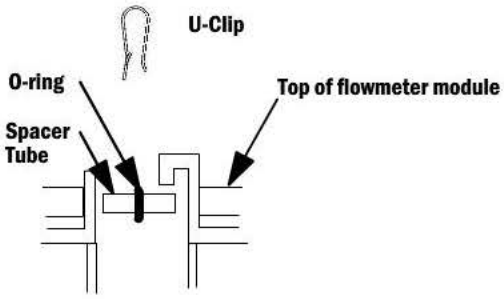

6. Install the screw through the O_2 flowmeter module to locks the O_2 and N_2O flowmeter modules together.

7. Reattach the pilot tube that goes to the balance regulator.

8. Install the flowhead into the machine. Reconnect the tubing and the O_2 supply switch harness.

9. Confirm needle valve calibration (Section 5.3).

10. Install the spacer on the N_2O needle valve stem.

11. Install the chain on the O_2 knob/sprocket assembly and the N_2O sprocket.

12. Install the chain and sprockets on the needle valve stems as an assembly. Do not tighten the set screws.

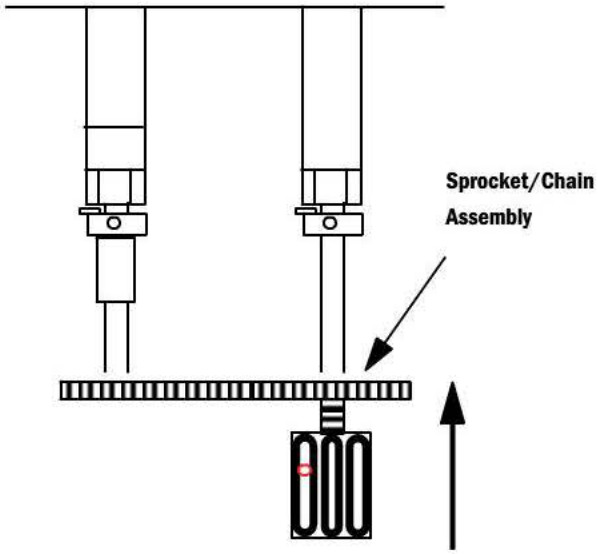

13. Install the N_2O knob. Snug one set screw to hold the knob in place.
14. Perform the link system calibration (Section 5.4).
15. Install the flowmeter panel shield.
16. Perform the checkout procedure (Section 3).

9.8.5 Replace flowmeter frame

1. Remove the front flowmeter panel shield (Section 9.8.1).
2. Remove the complete flowmeter head (Section 9.8.3).
3. Separate the flowmeter modules as required (Section 9.8.4).
4. Remove the flowtubes (Section 9.8.2). Keep all the parts for reassembly.
5. Remove the gas identification panel by removing the two screws at the back of the frame. Keep all the parts for reassembly.

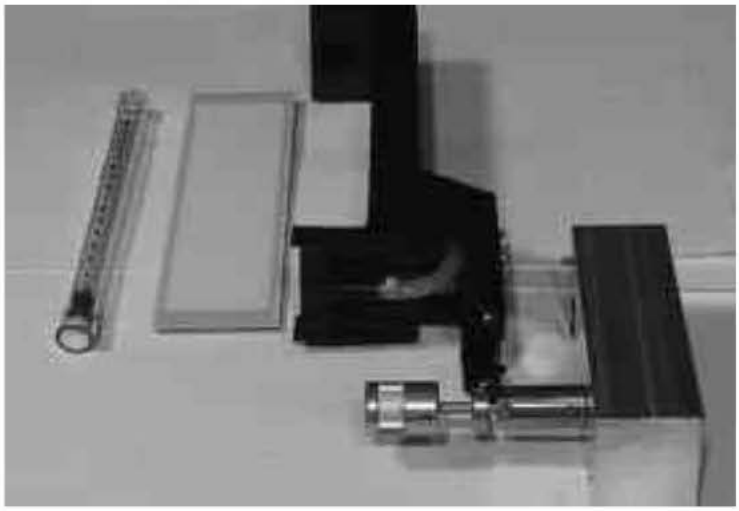

6. Remove the flowmeter frame by loosening the four mounting screws at the back of the regulator manifold.

   Note: There is a retainer in each screw location that keeps each screw within the manifold.

7. To reassemble, perform the previous steps in reverse order.
8. If replacing O_2 or N_2O frames, perform the link system calibration (Section 5.4).
9. Perform the checkout procedure (Section 3).

9.8.6 Replace O_2 supply switch

The O_2 supply switch is located on the O_2 flowmeter's regulator module.

1. Remove the upper rear panel (Section 9.2).
2. Remove the two mounting screws from the O_2 supply switch.

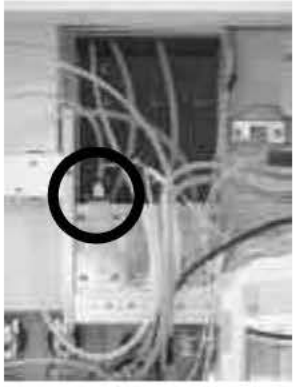

3. Pull the O_2 supply switch out of the regulator manifold.
4. Install the replacement O_2 supply switch.
5. Tighten the screws.
6. Disconnect the leads from the old switch and reconnect them to the new switch.
7. Adjust the alarm threshold for the new O_2 supply switch, as explained in the checkout procedure below (Section 9.8.7).
8. Replace the rear panel.
9. Perform the checkout procedure (Section 3).

9.8.7 Checkout procedure for O_2 supply switch

1. Remove the upper rear panel (Section 9.2).
2. Attach a gauge to the O_2 primary regulator test port. (On pipeline only machines, attach the gauge to a 6-mm O_2 port).
3. Adjust the O_2 flow control to minimum flow (clockwise).
4. Install an O_2 cylinder and open the cylinder valve (for pipeline only, connect O_2 pipeline source).
5. Turn the system on.
6. Close the cylinder valve (disconnect pipeline from source) and watch the test gauge as the O_2 pressure bleeds down slowly.

   Note: The "No O_2 pressure" alarm should occur between descending pressure of 221–193 kPa (32–28 psi).
7. If adjustment is required, set the adjustment screw so that the "No O_2 pressure" alarm occurs at 207 ±7 kPa (30 ±1 psi).
8. Disconnect the gauge and plug the test port
9. To reassemble, perform the previous steps in reverse order.
10. Perform the checkout procedure (Section 3).

9.8.8 Replace secondary regulator manifold or balance regulator manifold

1. Remove the front flowmeter panel shield (Section 9.8.1).
2. Remove the complete flowmeter head (Section 9.8.3).
3. Separate the flowmeter modules (Section 9.8.4).
4. Remove the flowmeter frame from the regulator manifold by removing the four screws at the rear of the regulator manifold (no need to remove flowtubes).
5. Remove the needle valve from the regulator manifold:
   a. Unscrew the complete assembly together (stop collar, needle valve).
   b. Replace the o-ring if necessary.
6. Screw the needle valve into the new regulator manifold.
7. Remove the plugs and balance regulator elbow fitting (and O_2 supply switch if an O_2 module) from the old regulator manifold.
8. Install the plugs and balance regulator elbow fitting (and O_2 supply switch if an O_2 module) into the new regulator manifold (pull on the plugs and fittings to ensure that they are locked into the manifold).
9. Reinstall the flowmeter frame to the regulator manifold.
10. Reinstall all the flowmeter modules to the flowmeter head.
11. Reinstall the flowmeter head (Section 9.8.4).
12. Do the necessary calibrations (Section 6).

Necessary calibrations	Section
Secondary Regulator	5.2
O_2 minimum flow	5.3.1
Link system	5.4

13. Reinstall the front flowmeter panel shield.
14. Perform the checkout procedure (Section 3).

9.8.9 Replace O_2 or N_2O needle valves (on machines with N_2O)

For machines without N_2O, refer to Section 9.8.10 for replacing the O_2 needle valve.

1. Bleed all gas pressure from the machine (Section 9.1).
2. Ensure that all cylinder and pipeline gauges read zero before proceeding.
3. Remove the front flowmeter panel shield (Section 9.8.1).
4. Set the O_2 and N_2O needle valves to their minimum position.
5. Loosen the set screws on the N_2O knob, then remove the knob.
6. Loosen the set screws on the N_2O sprocket and the O_2 knob.
7. To remove, grasp the O_2 knob/sprocket, N_2O sprocket, and chain as an assembly. Remove as an assembly.
8. Remove the spacer from the N_2O needle valve spindle.
9. Loosen the set screws on the needle valve stop collar for the needle valve that is being replaced.
10. Remove the stop collar.
11. To remove the needle valve from the flowmeter block, turn the needle valve counterclockwise with a 16-mm wrench.
12. To install the new needle valve, turn it clockwise and tighten it with the wrench.

    Note: Be sure the o-ring is properly located on the tip of the needle valve.

⚠ WARNING The O_2 and N_2O needle valves are not the same. Patient injury can result if the wrong needle valve is installed in the flowmeter block. You can identify the N_2O needle valve by a groove located just below the top brass hex.

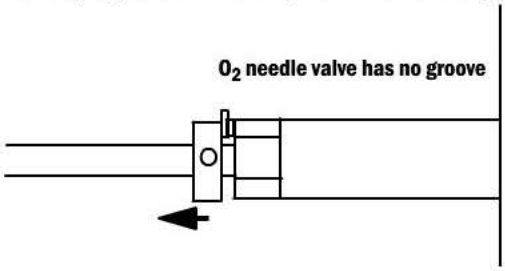

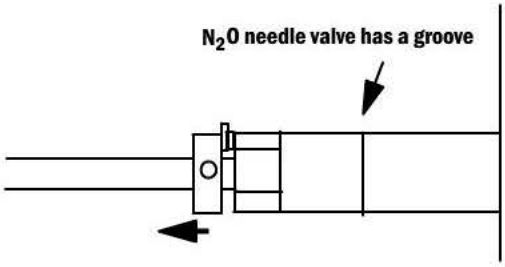

13. Install the stop collar on the new needle valve. Do not tighten the set screws.
14. Perform the needle valve calibration (Section 5.3).

15. After calibrating the needle valve, put the spacer the N_2O needle valve spindle.

16. Put the chain on the O_2 knob/sprocket assembly and the N_2O sprocket.
17. Install the chain and sprockets on the needle valve spindles as an assembly. Do not tighten the set screws.

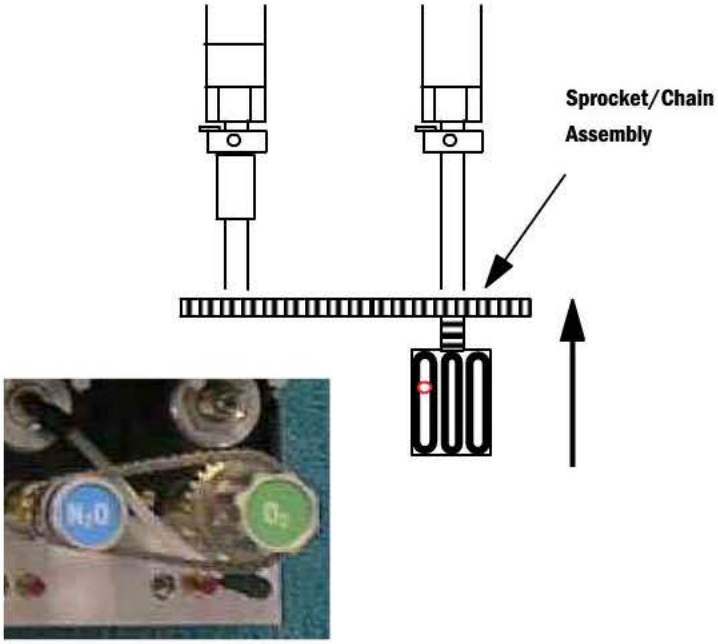

18. Install the N_2O knob. Do not tighten the set screws.
19. Perform the link system calibration (Section 5.4).
20. Install the flowmeter panel shield.
21. Perform the checkout procedure (Section 3).

9.8.10 Replace an Air needle valve on all machines or an O_2 needle valve on machines without N_2O

For machines with N_2O, refer to Section 9.8.9 for replacing the O_2 needle valve.

1. Bleed all gas pressure from the machine (Section 9.1).
2. Ensure that all cylinder and pipeline gauges read zero before proceeding.
3. Remove the front flowmeter panel shield (Section 9.8.1).
4. Loosen the set screws on the flow control knob and remove the knob.
5. Loosen the set screws on the stop collar and remove the collar.
6. If equipped, remove the maximum flow stop collar.
7. Using a 16-mm wrench, remove the needle valve by turning it counterclockwise.
8. Install the new needle valve and tighten.

   Note: Be sure the o-ring is properly located on the tip of the needle valve.
9. If equipped, install the maximum flow stop collar (do not tighten).
10. Install the stop collar (do not tighten the screws).
11. Install the flow control knob on the shaft. Tighten one set screw to snug.
12. Reconnect the gas supplies.
13. Perform the flow control stop procedures explained in:
    - Section 5.3.1 for O_2.
    - Section 5.3.3 for Air.
14. Install the flowmeter panel shield.
15. Perform the checkout procedure (Section 3).

9.9 Service vaporizer manifold parts

9.9.1 Repair manifold port valve

1. Set the system switch to Standby.
2. Remove the vaporizers from the vaporizer manifold.
3. Using a 14-mm wrench, carefully remove the valve nipple (threaded).

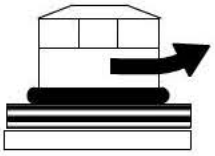

4. Disassemble as necessary to replace parts. The following illustration shows the parts.

Note: The port valve replacement kit includes the valve cartridge assembly and the seal. The kit does not include o-rings.

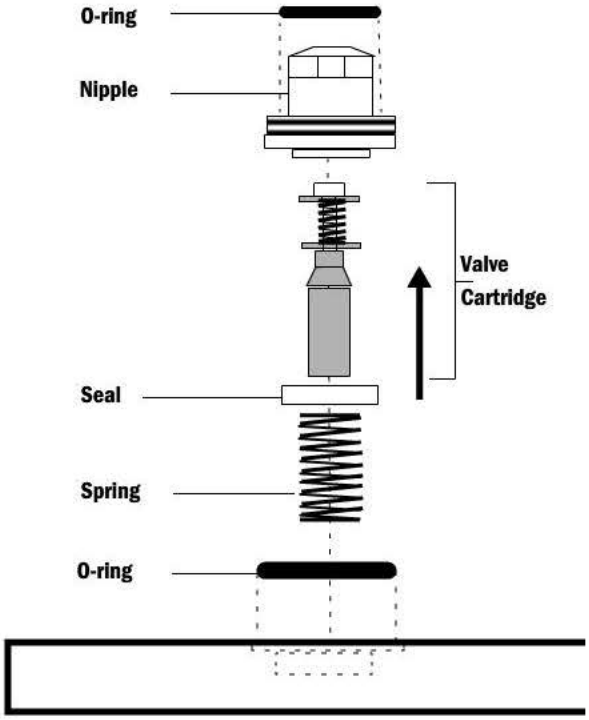

5. When installing a new valve cartridge assembly into the vaporizer manifold, put a light coat of Krytox on the bottom portion of the cartridge. The bottom portion of the cartridge is defined as the brass surface that is inserted in the lower spring. **Note:** Do not apply Krytox to the valve seal.
6. Verify that the parts are free of dust and dirt.
7. To reassemble, perform the previous steps in reverse order.
8. Complete the port valve checkout procedure described in the following section (Section 9.9.2).

9.9.2 Checkout procedure for manifold port valve

Use the Vaporizer Manifold Valve Test Tool to perform the checkout procedure for the manifold port valve. This tool and test procedure are intended for use only when the valve cartridge assembly is replaced.

Note This replacement and test procedure is a service action and is not part of the maintenance program.

1. Set the system switch to Standby.
2. After replacing the valve cartridge assembly, remove the vaporizer port o-ring.
3. Attach the valve tester to the top of the valve by sliding the bottom of the tester onto the o-ring groove.
4. Tighten the tester screw down onto the valve until the screw bottoms out on the top of the valve. The tester o-ring should create a seal with the top of the valve.
5. Remove the upper rear panel (Section 9.2).
6. Remove the inlet tube from the vaporizer manifold.
7. Set the SCGO Selector switch to ACGO.
8. Test the negative low-pressure leak-test device:
   a. Put you hand on the inlet of the leak-test device. Push hard for a good seal.
   b. Remove all air from the bulb.
   c. The bulb should not inflate in less than 60 seconds.
9. Attach the negative low-pressure leak-test device to the ACGO outlet.
10. Remove all air from the bulb. The bulb should not inflate in less than 45 seconds.
11. Remove the valve tester.
12. Reassemble the inlet tube, vaporizer port o-ring, and the upper rear panel.
13. Conduct a negative low-pressure leak test on the system (Section 3.9.1).

⚠ WARNING If the valve test tool is not removed before flowing gas through the system, pneumatic head damage could result.

9.9.3 Replace vaporizer manifold check valve

1. Set the system switch to Standby.
2. Remove the vaporizers from the vaporizer manifold.
3. Remove the upper rear panel.
4. Disconnect the tubing from the valve block.

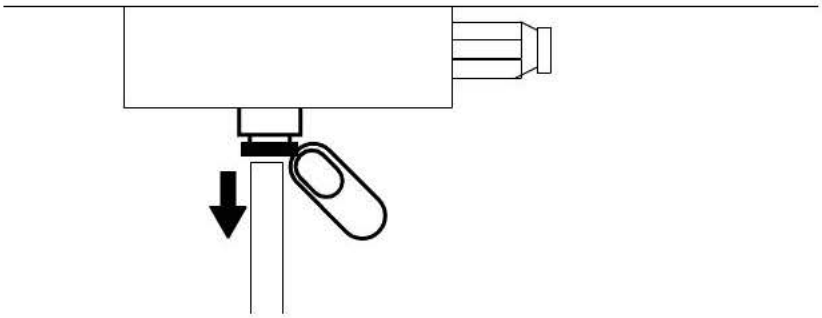

5. Remove the valve block.
   - To access the left-hand mounting screw (**A**), remove the right (viewed from front) side panel (**B**).
   - The right-side extrusion include an access hole (**C**) for removing the left-hand mounting screw.
   - **Note:** For early production machines that do not have an access hole in the extrusion, you must remove the vaporizer manifold to remove the valve block.

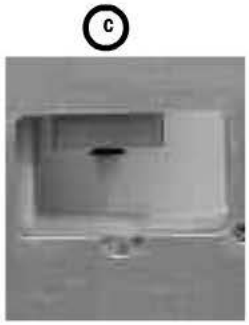

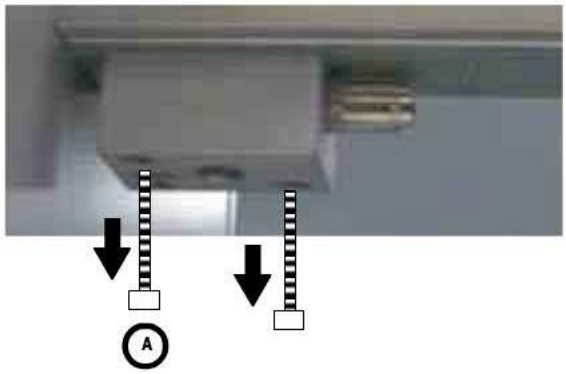

Note The valve body, o-ring, and flapper do not come out with the block. They stay intact at the bottom of the vaporizer manifold.

6. Pull the flapper out of the valve body.

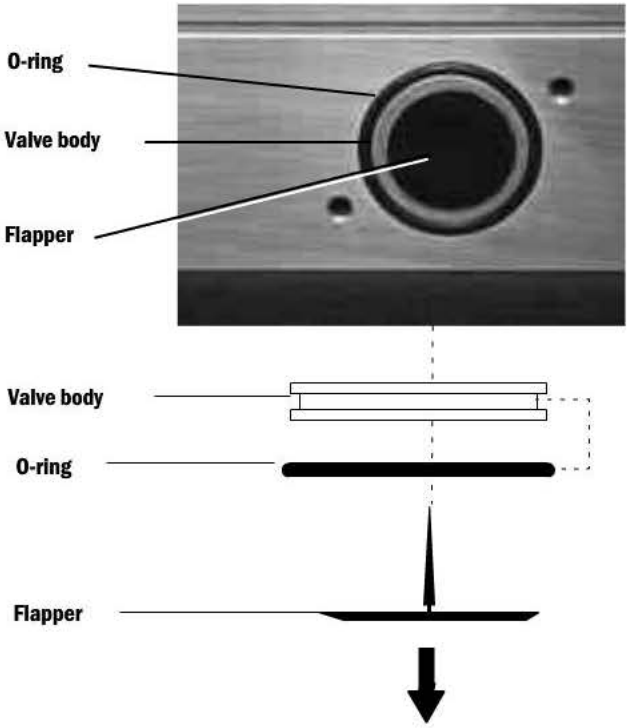

7. Using a hex wrench, put the wrench through one of the holes of the valve body and pull down to remove the valve body and o-ring.
8. Verify that parts are free of dust and dirt.
9. Replace the flapper by inserting the flapper stem and gently pulling the stem until the flapper secures to the valve body.
10. Lightly lubricate the o-ring with Krytox.
11. Place the lubricated o-ring on the valve body port at the bottom of the manifold.
12. Gently install the valve body in the manifold:
    - Check that the o-ring makes a good seal between the manifold and the valve body.
    - Check that the flapper valve makes solid contact with the valve body.
13. Install the valve block.
14. Reconnect the tubing to the valve block. Pull on the tube to ensure that it is locked in the fitting.
15. Install the vaporizer front panel.
16. Perform the checkout procedure (Section 3).

9.9.4 Replace vaporizer pressure relief valve

1. Set the system switch to Standby.
2. Remove the vaporizers from the vaporizer manifold.
3. Remove the upper rear panel (Section 9.2).
4. Using a 13mm open ended wrench, remove the vaporizer pressure relief valve by turning counterclockwise.

5. Verify that the parts are free of dust and dirt.
6. Install a new vaporizer pressure relief valve.
7. To reassemble, perform the previous steps in reverse order.
8. Perform the checkout procedure (Section 3).

9.9.5 Replace vaporizer manifold

1. Remove the upper rear panel (Section 9.2).
2. Remove the front flowmeter shield (Section 9.8.1).
3. Remove the right side panel (**A**).
4. From the front of the machine, remove the screw (**B**) at the right upright of the flowhead bezel.
5. From the back of the machine, remove the two screws (**C**) that hold the vaporizer manifold vertical support to the flowhead bracket.
6. From the back of the machine, remove the two screws (**D**) that hold the vertical support to the vaporizer manifold.
7. Remove the vertical support from the machine.
8. While holding the vaporizer manifold, remove the two screws (**E**) at the right-hand extrusion to release the manifold.

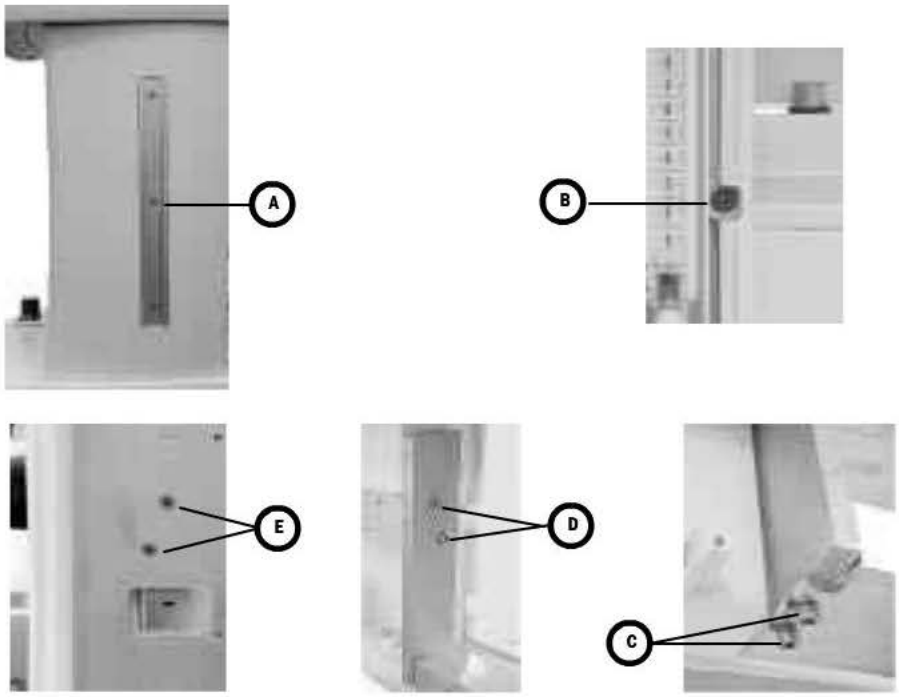

9. Install the new vaporizer manifold in reverse order. Do not fully tighten the screws until they are all in place.
   - Attach the new manifold to the right-hand extrusion (**E**).
   - Attach the vertical support to the vaporizer manifold (**D**).
   - Attach the bottom of the vertical support to the flowhead bracket (**C**).
   - Attach the vertical support to the front bezel (**B**).
10. Tighten the mounting screws in the following order: **E**, **D**, **C**, **B**.
11. Reassemble the machine.
12. Perform the checkout procedure (Section 3).

9.10 Replace ACGO selector switch

Removal

1. Remove the tabletop (Section 9.3).
2. Clip the tie wraps (**1**) from the outlet barb fittings at the side of the switch.

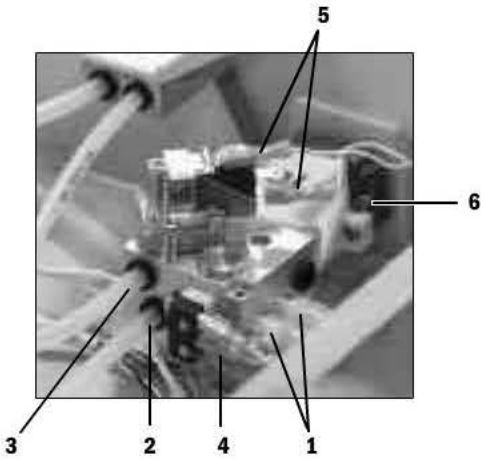

3. Disconnect the fresh gas (**2**) and flush (**3**) tubes at the back of the switch.
4. Disconnect the wires from the ACGO mode microswitch (**4**) at the back of the selector switch.
5. Disconnect the wires from the flush pressure switch (**5**) on top of the selector switch.
6. Set the ACGO selector switch to ABS.
7. Back out the selector switch mounting screws (**6**) until the tips are flush with the face of the mounting casting.
8. While pushing the selector knob toward the machine and holding it steady, push the valve body toward the knob and rotate it counterclockwise to separate the valve body from the knob assembly.
9. Remove the knob assembly and protective shroud from the machine.
10. Remove the valve from the silicone output tubes.

Replacement

1. Remove the knob assembly from the valve body.
2. Back out the selector switch mounting screws until the tips are flush with the face of the mounting casting.
3. Guide the outlet fittings of the valve body into their respective silicone tubes.
4. Hold the selector knob with the indicator mark facing down. Turn the chrome collar to its maximum counterclockwise position (as viewed from the front).

5. Place the shroud over the knob and guide the assembly into the pan opening.
6. Ensure that the indicators on the shroud align with label on the pan and the alignment tab mates with the alignment hole in the pan.

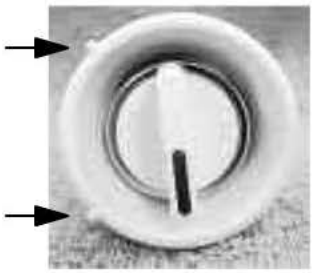

7. While holding the knob assembly steady against the pan, place the valve assembly over the knob actuator. Using moderate force press the two assemblies together. The knob should rotate to the ACGO position.

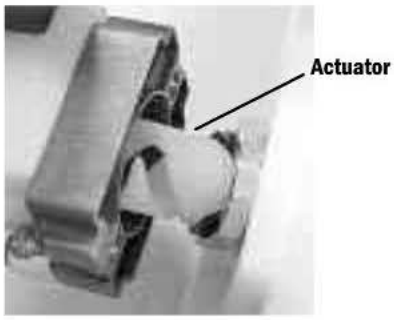

8. While continuing to force the assemblies together, rotate the knob assembly to the ABS position. The assemblies should snap into place.
9. Verify proper alignment of the knob with the setting indicators. Tighten the mounting screws evenly to secure the switch assembly to the pan.
10. Secure the outlet tubing with tie wraps.
11. Connect the fresh gas and flush gas tubing. Pull on the tubing to ensure that it is locked in the fitting.
12. Reconnect the wires to the ACGO mode microswitch at the back of the valve (top two terminals).
13. Reconnect the wires to the flush pressure switch at the top of the valve (upper and lower terminals).
14. Replace the tabletop.

Test procedure

1. Confirm that flush flow and 5 L/min fresh gas flow are diverted to the ACGO port and the ABS in the respective knob positions.
2. Confirm that the ventilator display indicates ACGO mode when the valve is set in the ACGO position.
3. Test the function of the flush pressure switch (Service Mode - “Display Discrete I/O Signals”).
4. Perform the low-pressure leak test (Section 3.9).
5. Perform the checkout procedure (Section 3)

9.11 Clean or replace ACGO port flapper valve

1. Remove the tabletop (Section 9.3).
2. Remove the ACGO cap mounting screws.
3. Remove the cap.
4. Examine the flapper and disk for obstructions or debris. Clean with isopropyl alcohol if necessary; retest.
5. If leak persists, replace the flapper.
   - Remove the flapper from the check valve disk.
   - Clean the new flapper with isopropyl alcohol.
   - Apply a drop of isopropyl alcohol to the center hub of the new flapper.
   - Before the alcohol evaporates, align the center hub of the new flapper with the center hole of the check valve disc.
   - While pressing the flapper against the disc, use you fingernail to help pull the hub through the disc from the other side.
6. Lubricate the o-ring sparingly with Krytox (do not get Krytox on the flapper).
7. Insert the flapper assembly into the ACGO outlet with the flapper up.
8. Replace the cap.

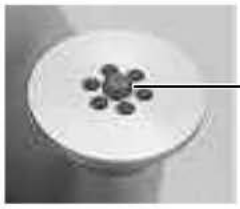

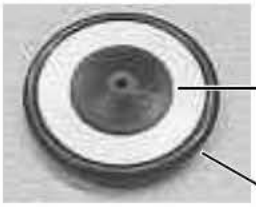

9.12 Reconfigure sample gas return line

Sample gas return is directed to the scavenging system as a factory default. Perform the following to reroute the sample gas back to the breathing system. Refer to "Tubing" on page 11-7.

1. Remove the tabletop (Section 9.3).
2. Port 4 (**A**) of the ABS breathing system is connected to the expiratory circuit, downstream of the expiratory check valve. As a factory default, Port 4 is plumbed with a length of tubing that is plugged (**B**) at the far end.

3. Remove the plug from the tube.
4. Find the sample return line at the left-rear corner of the pan assembly. The sample return line includes an inline connector (**C**) at the point where the sample line goes down into the vent engine housing.

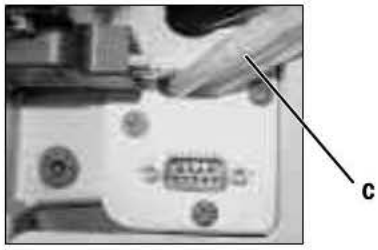

5. Separate the scavenging tube, removing the inline connector from the portion of the tube that extends into the vent engine housing. Plug the open end of the scavenging tube with the plug removed above.
6. Insert the inline connector from the sample return port into the open tube to Port 4. Pull on the connector to ensure that it is securely connected.
7. Replace the tabletop.
8. Perform the checkout procedure (Section 3).

9.13 Replace the APL valve

1. Remove the ABS breathing system.
2. The APL valve is held in place with a spring and a retainer (**A**) that snaps into a recess in the lower body of the APL valve. To release the retainer, place an appropriately sized straight blade screwdriver into the housing cutout (**B**). Twist the screwdriver to release the retainer.
3. Place the new APL valve into position with the setting indicator facing forward.
4. Place the spring into the retainer.
5. While holding the APL valve tight to the housing, Snap the spring and retainer onto the valve body from below.
6. Reinstall the ABS breathing system.
7. Perform the checkout procedure (Section 3).

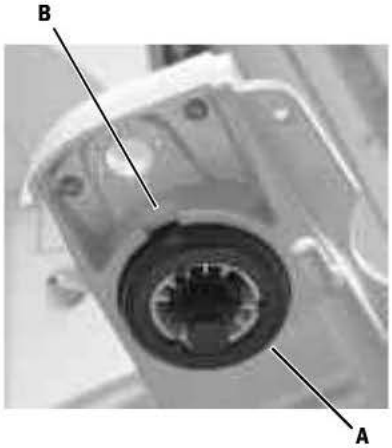

9.14 Replace the bag support arm

1. Remove the ABS breathing system from the machine.
2. From the underside of the casting, remove the two screws/ lockwashers (**A**) that hold the arm in place.
   - If either of the pins (see below) remain in the casting, remove them from the casting.

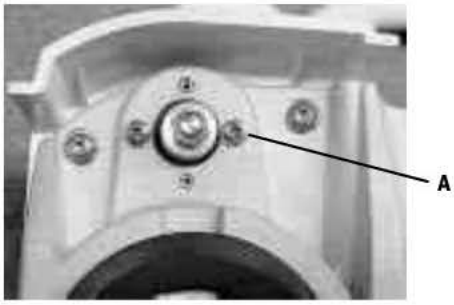

3. Install the new bag support arm assembly.
   - Position the bag arm over mounting pattern of 4 small holes in the support casting. The arm should extend towards the front of the machine. Align the two pins (**B**) extending from the base of the bag arm assembly, with two of the small holes in the casting that are in line with the APL valve.

   - Lower the bag arm, pushing the two pins into the holes.
   - From the underside of the casting, secure the bag arm with two M3x16 screws and lockwashers.
4. Test the force required to swing the bag arm from side to side and adjust if necessary.

Note: The adjustment nut is initially set so that 5-mm of exposed thread extends from the adjusting nut. With use, the force required to move the arm increases and may require readjustment.

The force is adjusted by turning the lock nut (8-mm socket) which is accessible from underneath the support casting. Turn clockwise to increase the force and counterclockwise to reduce the force.

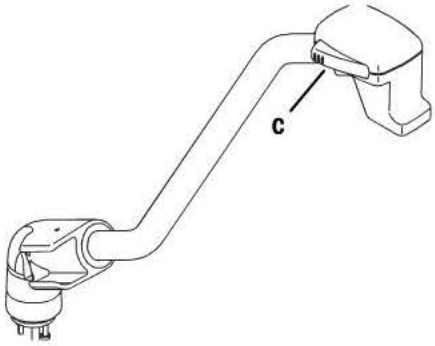

   - Swing the bag arm sideways through the 90 degree arc permitted by its internal stop.
   - Adjust to just enough friction to prevent the bag arm from swinging sideways as the bag height is being changed. The bag arm height is changed by squeezing the lock release lever (**C**) at the free end of the bag arm and rotating it to the desired position.
5. Replace the ABS breathing system.

9.14.1 Servicing the bag support arm

Service parts for the bag support arm include the upper and lower assemblies.

To replace either assembly:

1. Remove the bag support arm from the machine (Section 9.14).
2. To separate the upper assembly from the lower assembly, use a small (2.5-mm) pin punch from the bottom to drive the dowel pin up and out.

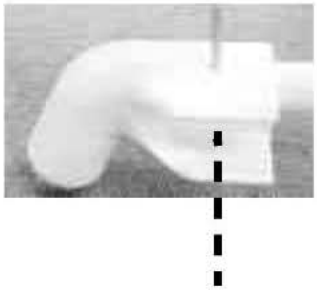

3. To assemble the bag arm, apply a light coat of Krytox to the area of the upper arm (**A**) that extends into the lower arm (including the dowel pin groove).

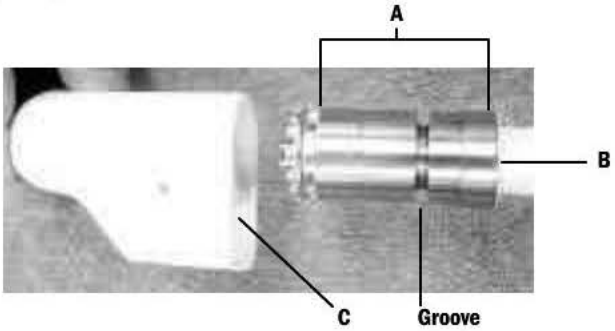

4. Insert the upper assembly into the lower assembly. Align the surface (**B**) of the upper assembly with the surface (**C**) of the lower assembly.
5. Insert the dowel pin into the hole (from the top side as shown). Drive the dowel pin into the bag arm until it is flush with the top surface.

9.14.2 Replace friction pad in lower bag arm assembly

1. Remove the ABS breathing system from the machine.
2. Using an 8-mm socket, remove the nut (**A**), shoulder washer, and spring from the lower assembly.

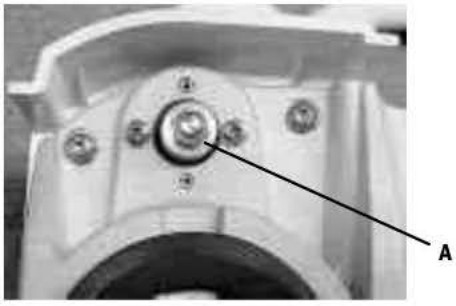

3. Lift the bag support arm off of the swivel post. Remove the old friction pad.
4. Wipe any residue and friction particles from the post.
5. Insert a new friction pad into the base. Keep approximately 1 mm of space between the end of the pad and the bottom of the base.

   Note: Align the friction pad gap with the seam (**B**) in the base. Position the retaining screw so the pin (**C**) at the base is perpendicular to the seam.

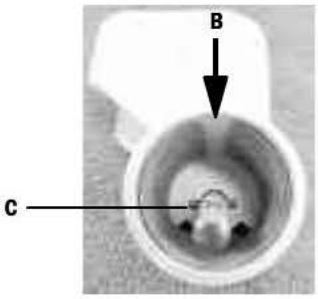

6. With the bag support arm facing forward, place the base of the arm over the swivel post. Ensure that the slot in the base (**D**) engages the tab (**E**) on the swivel post.

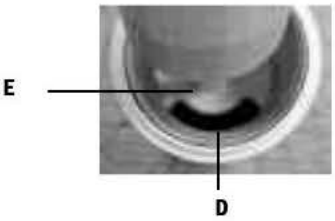

7. Replace the spring, shoulder washer and nut. Tighten the nut until 5 mm of thread extends beyond the nut.
8. Follow the procedure in Section 9.14 to adjust the force required to swing the bag arm from side to side.

9.14.3 Replace bag port housing

1. Remove the bag support arm cover (**A**) – screw and lockwasher from below.

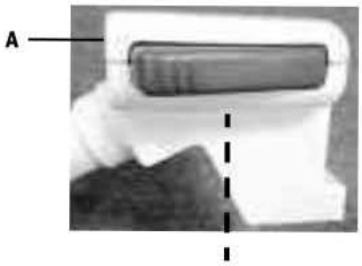

2. Remove nut (**B**) to remove the release lever (**C**).
3. Remove the retaining ring (**D**).
4. Slide the bag port housing (**E**) off the end of the bag support arm.

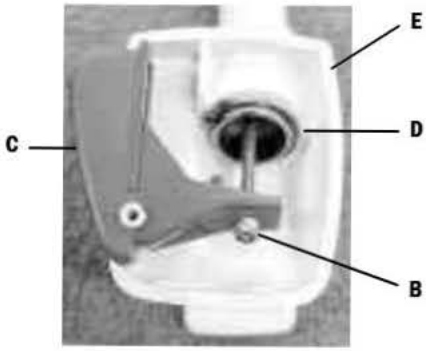

5. Before installing the new bag port housing, clean and lubricate sparingly with Krytox the exposed metal end (**F**) and the guide slot (**G**) of the bag support arm.

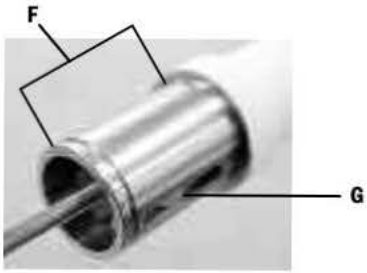

6. Slide the new bag port housing onto the bag arm. Secure it with the retaining ring.
7. Lubricate sparingly with Krytox the pivot boss (H) before replacing the release lever.
8. After replacing the release lever, adjust the mounting nut so that a 2-mm gap remains between the lever and housing when the release lever is fully depressed.
9. Replace the bag arm cover.

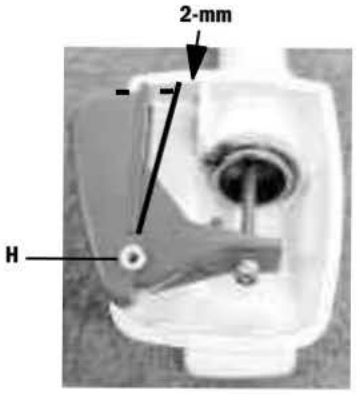

9.15 Replace auxiliary O_2 flowmeter

1. Bleed all gas pressure from the machine (Section 9.1).
2. Ensure that all cylinder and pipeline gauges read zero before proceeding.
3. Remove the tabletop (Section 9.3).
4. Remove the adjustment knob from the flowmeter; pull forward.
5. Remove the gauge panel mounting screws and move the panel forward to access the flowmeter.

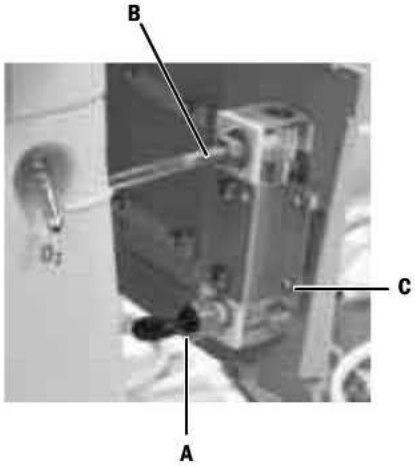

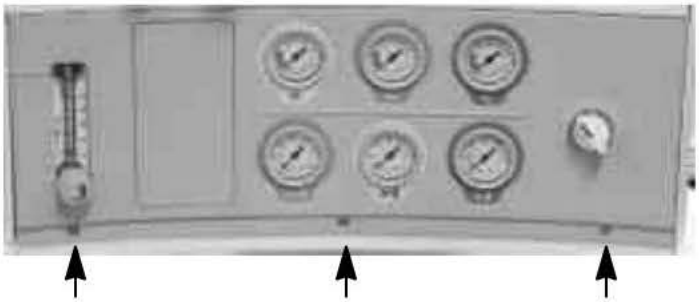

6. Disconnect the inlet tube fitting (A).
7. Disconnect the tube (B) from the outlet fitting.
8. Remove the four screws (C) that hold the flowmeter mounting bracket to the front panel.
9. Transfer the mounting bracket to the new flowmeter.
10. Reassemble in reverse order.
11. Perform the checkout procedure (Section 3).

9.16 Replace the suction control module

The suction control module can be replaced by removing the front panel, along with the ABS and the tabletop, to gain access. Alternatively, if the situation warrants, the suction control module can be accessed by removing the rear panel.

9.16.1 Front panel method

1. Bleed all gas pressure from the machine (Section 9.1).
2. Ensure that all cylinder and pipeline gauges read zero before proceeding.
3. Remove the tabletop (Section 9.3).
4. Remove the gauge panel mounting screws and move the panel forward to access the suction control module.

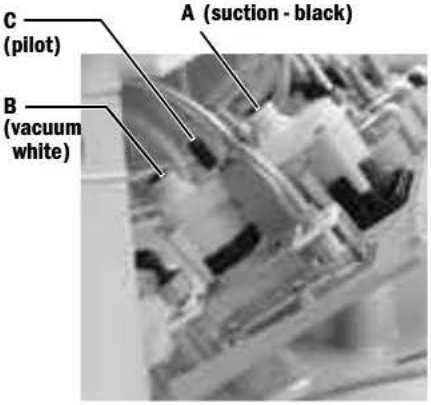

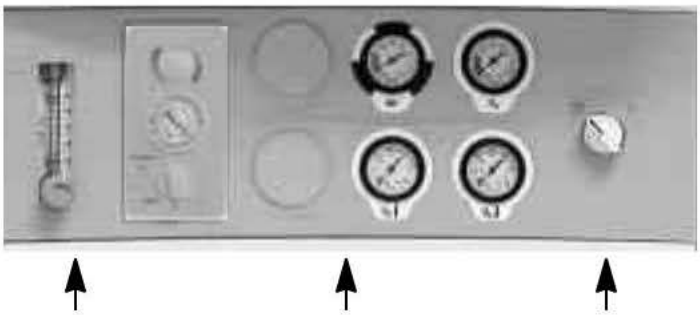

5. Disconnect the tubing from the suction control module.
   - Tube (**A**) from overflow safety trap (suction).
   - Tube (**B**) from vacuum source.
   - If venturi drive, tube (**C**) from pilot valve adapter.
6. Remove the two mounting screws that hold the suction control module to the mounting bracket.
7. Transfer the mounting bracket to the new suction control module.
8. Reassemble in reverse order.
9. Perform the checkout procedure (Section 3).

9.16.2 Rear panel method

1. Lower the upper rear panel (Section 9.2).
2. Disconnect the white (**A**) vacuum and black (**B**) suction fittings from the rear panel. Do not remove the tubing from the regulator.
3. If you are replacing a venturi drive suction control module, disconnect the tube (**C**) from the pilot valve adapter.

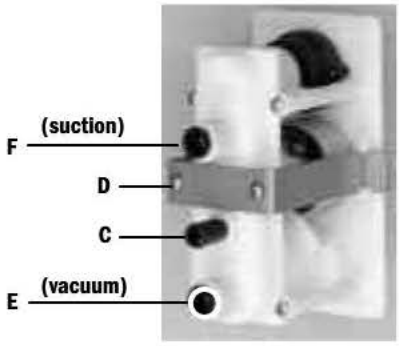

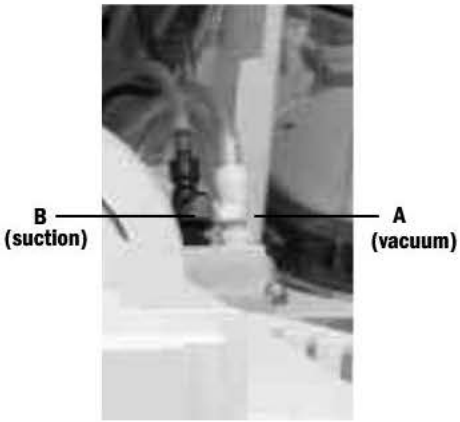

4. Remove the two screws (**D**) that hold the suction control module to the mounting bracket.
5. Remove the regulator assembly from the front panel.
6. Transfer the tubing to the new regulator:
   - Attach the vacuum source tube (white fitting) to the lower connector (**E**).
   - Attach the suction tube (black fitting) to the upper connector (**F**).
7. Guide the tubes into the front panel opening.
8. While holding the regulator assembly against the front panel, attach the retaining bracket to the regulator. Tighten the screws to secure the regulator assembly.
9. If applicable, attach the control port tube to the pilot valve adapter (**C**).
10. Attach the vacuum and suction fitting to the rear panel manifold.
11. Replace the rear panel.
12. Perform the checkout procedure (Section 3).

9.17 Replace ABS breathing system components

9.17.1 Replace Bag/Vent switch assembly

1. Remove the ABS breathing system.
2. From the underside, remove the bellows base manifold (**A**) and fully loosen the two captive screws (**B**) at the bag port side of the APL/BTV manifold.

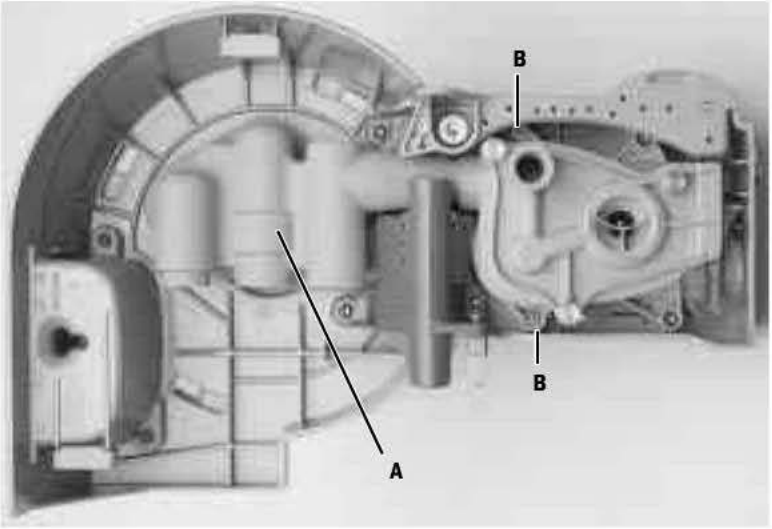

3. From the topside, rotate the Bag/Vent switch cartridge counterclockwise until the Bag/vent switch outlet port (**C**) clears the bellows housing.

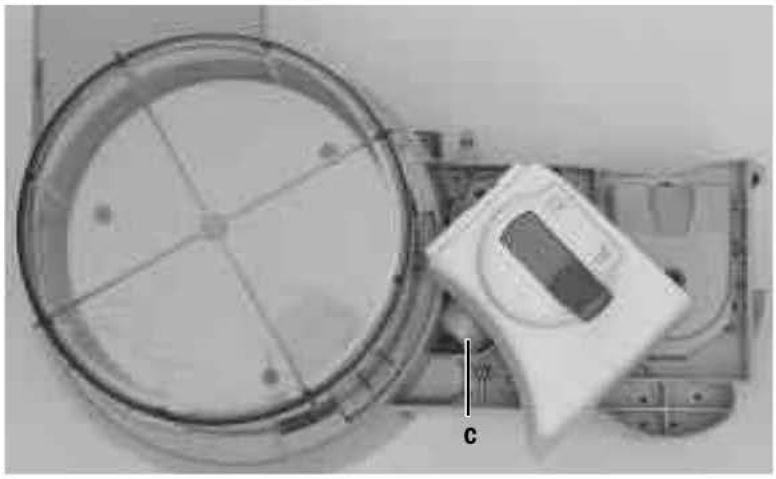

4. Lift out the Bag/Vent switch cartridge from the housing.
5. Replace the Bag/Vent switch cartridge in reverse order.
6. Reinstall the ABS breathing system.
7. Perform the checkout procedure (Section 3).

9.17.2 Replace bellows base latch assembly

To replace the latch assembly, you must disassemble the bellows base assembly to the point where you can remove the guide (**A**) and latch assembly (**B**) as a unit.

1. Remove the Bag/Vent switch cartridge (Section 9.17.1).
2. Remove the two remaining screws (**C**) that hold the APL/BTV manifold to the bellows base assembly. Remove the APL/BTV manifol.

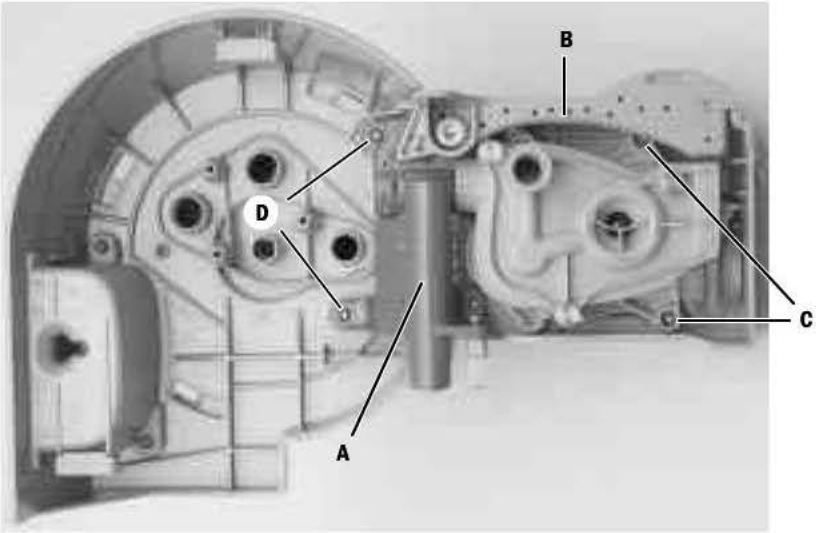

3. To remove the guide/latch assembly, remove two mounting screws (**D**) from the underside. Remove two additional mounting screws from the topside. Remove the guide/latch assembly from the bellows base assembly.
4. Separate the latch assembly from the guide assembly.
5. To install the new latch assembly, put the spring (**E**) into place in the guide assembly (long leg down).
6. Place the latch assembly on the guide assembly so that the latch engages the short leg of the spring. Secure the latch assembly (**F**) to the guide assembly.

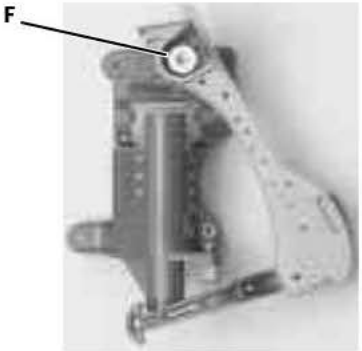

7. Mount the guide/latch assembly into the bellows base assembly.
8. Reassemble the breathing system in reverse order.
9. Perform the checkout procedure (Section 3).

9.18 Replace casters

⚠ **WARNING** Replacing a caster requires at least two people to maneuver and tip the machine. Personal injury and/or machine damage is possible if one person attempts this procedure alone.

1. Disconnect all pipeline hoses from the wall and the machine, close all gas cylinders, unplug the power cord, and set the system switch to standby.

⚠ **CAUTION** Remove the vaporizers before tipping the machine. If a vaporizer is inverted, it must be set to 5% and purged for 30 minutes with a 5 L/min flow. The interlock system prevents purging more than one vaporizer at a time.

2. Remove the absorber, the vaporizers, gas cylinders, drawers and all auxiliary equipment.

⚠ **CAUTION** To prevent damage, do not tip the Aespire machine more than 10 degrees from vertical.

3. Block the opposite wheels; then, block up the machine until there is enough room to remove the defective caster.

   To block up the machine, tip and slide blocks under the caster base. Raise both sides evenly until the unit is high enough to remove the caster.

4. The casters are threaded into the base and held with a Loctite compound. Remove the caster with an appropriately sized open-end wrench.

5. If required, clean the threads of the new caster with denatured alcohol.
6. Apply Loctite 242 to the threads of the new caster. Install the caster securely into place.
7. Make sure the caster turns freely.
8. Carefully lower the machine to the floor.
9. Perform the checkout procedure (Section 3).

9.19 Replace task light and switch

Remove the four screws (**A**) that hold the task-light lens to the upper shelf.

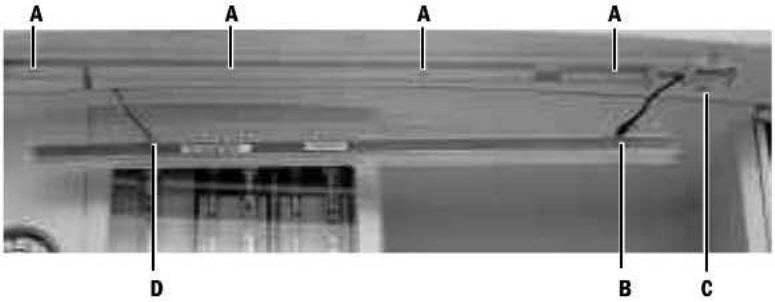

9.19.1 To replace the task-light switch

1. Using a small needle-nose pliers, disconnect the switch harness from the task-light circuit board connector (**B**).
2. Remove the two screws (**C**) that hold the switch retainer plate to the upper shelf.
3. Transfer the switch retainer plate to the new switch, counter-sunk side to the outside.
4. Mount the switch to the upper shelf.
5. Remount the task-light assembly. Ensure that the switch harness and the task-light harness wires are positioned in their respective recesses and are not pinched under the task-light lens.

9.19.2 To replace the task-light circuit board

1. Using a small needle-nose pliers,
   - disconnect the switch harness from the task light circuit board connector (**B**).
   - disconnect the task-light harness from the task light circuit board connector (**D**).
2. Slide the task-light circuit board out of the lens.
3. Slide the new task light into the lens, ensuring that the connectors are aligned with the lens cutouts.
4. Plug the task-light harness and the switch harness into their respective connectors on the task-light circuit board. Use a small screwdriver to push the connectors securely into place.
5. Remount the task-light assembly. Ensure that the switch harness and the task-light harness wires are positioned in their respective recesses and are not pinched under the task-light lens.

9.20 Replace the display cable (long arm)

Display cable replacement requires that you first remove the display arm from the dovetail extrusion.

Before replacing the display arm, note the routing of the cable.

After replacing the display arm, ensure that the cable is dressed properly and does not interfere with the motion of the display arm.

9.20.1 Removing the display arm

If equipped, remove additional equipment from the arm before removing the arm.

1. Remove the cable connector cover from the display. Disconnect the cable.
2. Remove the display from the display arm.
3. Remove the cable from the cable clamps.
4. Loosen the screws that secure the display arm in the dovetail.
5. If required, use a rubber mallet to tap the display arm out of the dovetail.

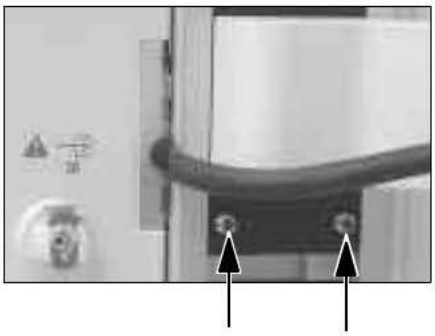

9.20.2 Replacing a display cable

1. Remove the three screws that hold the dovetail extrusion to the upright. Remove the extrusion to allow cable replacement.

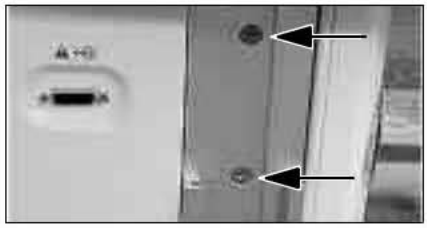

2. To access the cable routing for replacement, remove:
   - the rear upper panel (Section 9.2.1),
   - the lower electrical enclosure access panels (Section 9.2.2),
   - the tabletop (Section 9.3) and the cable raceway retainer plate (Section 9.23.5) under the tabletop.
3. After replacing the cable, place the cable in the notch shown.
4. Install the dovetail extrusion loosely to hold the cables in place.
5. Adjust the cable length outside the machine to approximately 60 cm.
6. Securely tighten the extrusion mounting screws.

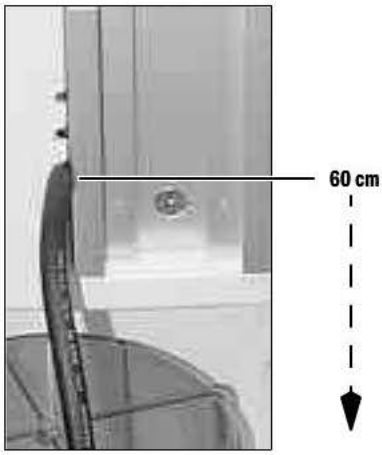

9.20.3 Installing the long arm

1. Place the arm into the extrusion.
2. Use a rubber mallet to tap the arm into place. Leave a 12-mm gap between the lower edge of the arm mounting plate and the end of the dovetail.

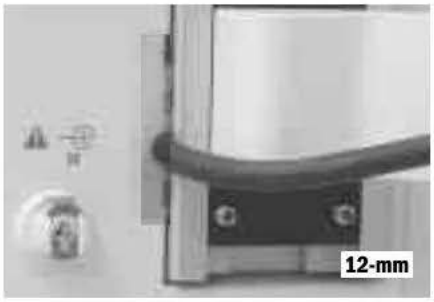

3. Tighten the mounting screws to secure the display arm.
4. Remount the display.
5. Route the display cable neatly through the cable clamps.

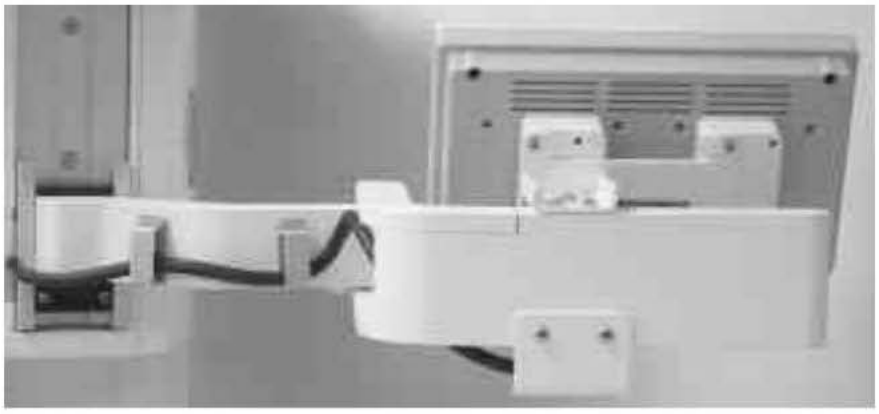

6. Attach the cable to the display. Install the connector cover.

1. **Cover**
2. **Rectangular washer**
3. **Mounting screw**

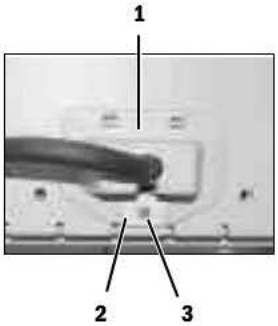

4. Ensure that the cable is secured so that it does not interfere with the display arm through the entire range of motion.

9.21 Replace the display cable (folding mount)

Display cable replacement requires that you first remove the folding mount from the dovetail extrusion.

Before replacing the folding mount, note the routing of the cable.

After replacing the folding mount, ensure that the cable is dressed properly and does not interfere with the motion of the display arm.

9.21.1 Removing the folding mount

1. Remove the cable connector cover from the display. Disconnect the cable.
2. Remove the display from the display arm.
3. Loosen the screws that secure the display arm in the dovetail.
4. If required, use a rubber mallet to tap the display arm out of the dovetail.

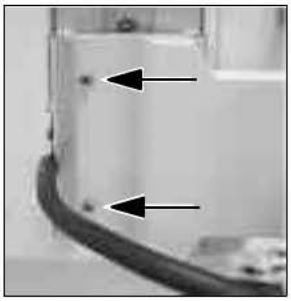

9.21.2 Replacing a display cable

1. Remove the three screws that hold the dovetail extrusion to the upright. Remove the extrusion to allow cable replacement.

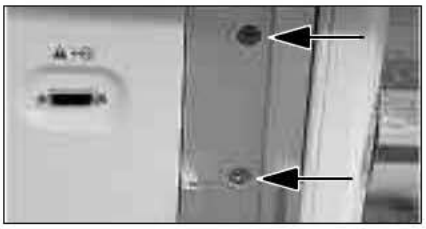

2. To access the cable routing for replacement, remove:
   - the rear upper panel (Section 9.2.1),
   - the lower electrical enclosure access panels (Section 9.2.2),
   - the tabletop (Section 9.3) and the cable raceway retainer plate (Section 9.23.5) under the tabletop.
3. After replacing the cable, place the cable in the notch shown.
4. Install the dovetail extrusion loosely to hold the cables in place.
5. Adjust the cable length outside the machine to approximately 43cm.
6. Securely tighten the extrusion mounting screws.

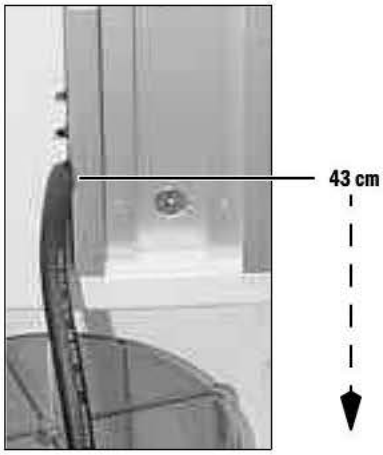

9.21.3 Installing the folding mount

1. Place the folding mount into the extrusion.
2. Slide the bracket down until the plate is flush with the top of the dovetail.
3. Tighten the mounting screws to secure the display arm.
4. Remount the display.
5. Attach the cable to the display.
6. Install the connector cover. Attach the cable clamp.

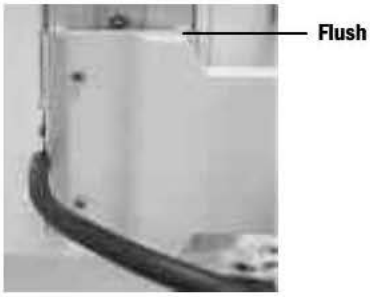

1. **Cover**
2. **Rectangular washer**
3. **Mounting screw**
4. **Cable clamp**

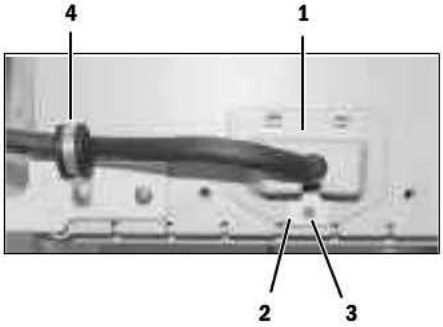

5. Ensure that the cable is secured so that it does not interfere with the display arm through the entire range of motion.

9.22 Aespire 7900 Control/Display module

To remove the control module:

1. Disconnect the cable.
2. Remove the screws that attach the control module to the mounting brackets.
3. Remove the control module and place it on a static control workstation.

9.22.1 Keyboard and EL display

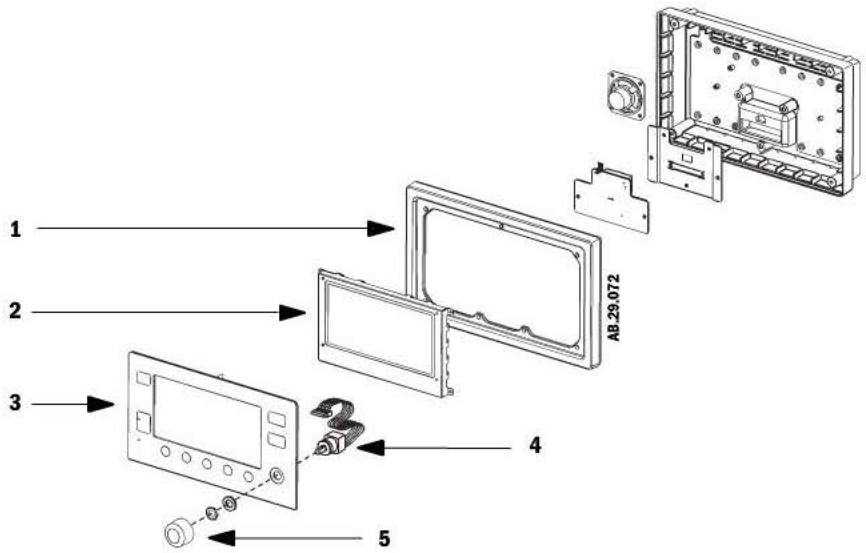

1. **Front housing**
2. **EL display**
3. **Keyboard**
4. **Rotary encoder switch**
5. **Control knob**

⚠ **CAUTION** Use an approved static control workstation and wrist grounding strap.

To remove the keyboard and EL display:

1. Loosen the screws on the rear corners of the control panel assembly.
2. Remove the back cover assembly.
3. To separate the front and rear assemblies, disconnect the 50-pin ribbon cable from connector J2 of the keyboard.
4. Remove the 20-pin ribbon cable from its connector on the EL display.
5. Remove the four M3 Keps nuts from mounting studs on keyboard and remove the EL display.
6. Remove the seven M4 Keps nuts from keyboard studs and remove keyboard from the front housing.
7. To replace the encoder switch, see Section 9.22.2.
8. When you replace the keyboard, remove the protective film from the back of the new keyboard window, clean, and check for scratches.
9. Assemble in reverse order.
10. Perform the Checkout Procedure found in Section 3.

9.22.2 Encoder switch

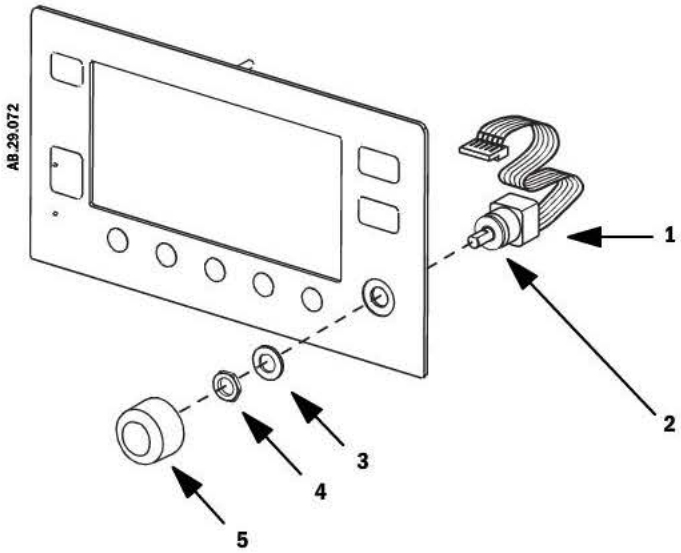

1. **Encoder switch with harness**
2. **Locking washer**
3. **Flat washer**
4. **Mounting nut**
5. **Control knob**

To replace the encoder switch:

1. To access the encoder switch, follow the disassembly instructions in Section 9.22.1.
2. Pull the control knob off the encoder shaft.
3. Disconnect the encoder harness from the back of the keyboard panel.
4. Remove the mounting nut and flat washer using a 14-mm wrench.
5. Gently pull the encoder switch from the keyboard panel.
6. Place a lock washer on the shaft of the new encoder switch.
7. Align the shaft of the new encoder switch with the hole in the front panel circuit board, push it through and place a flat washer on the encoder shaft.
8. Replace the mounting nut using a 14-mm wrench.
9. Replace the knob.
10. Assemble in reverse order.
11. Perform the Checkout Procedure found in Section 3.

9.22.3 Alarm speaker

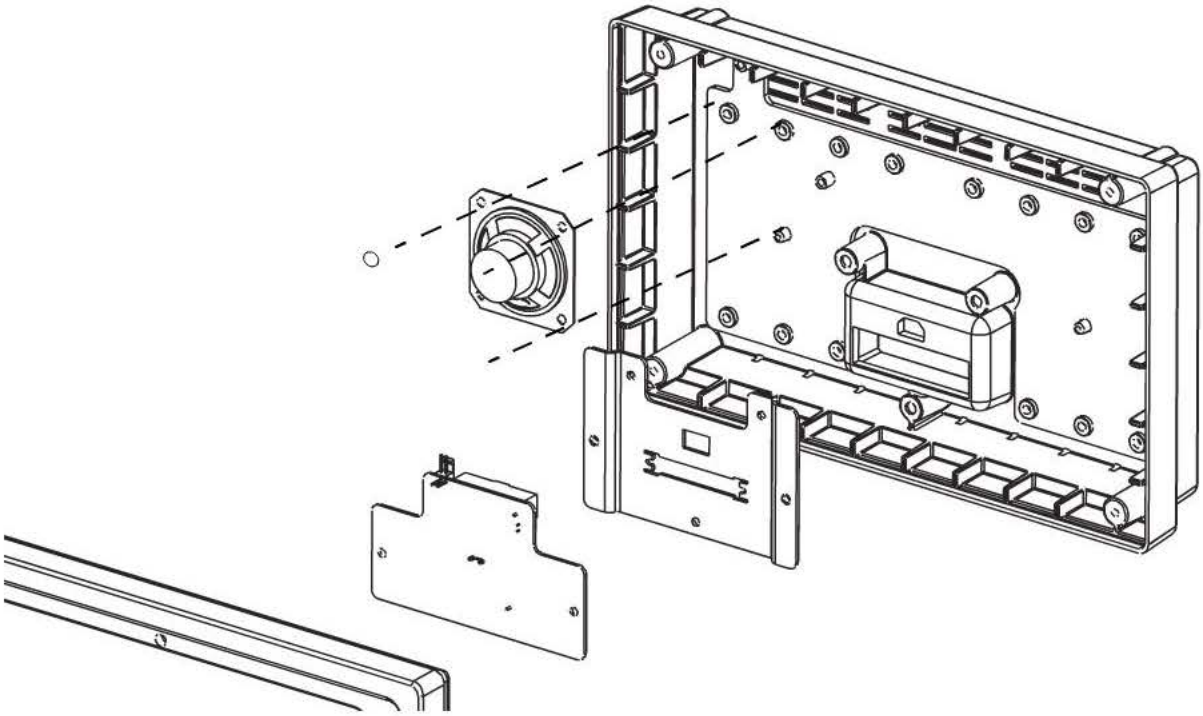

To replace the alarm speaker:

1. To access the speaker, follow the disassembly instructions in Section 9.22.1.
2. Remove the two screws holding the alarm speaker to the housing.
3. Install the new alarm speaker using the previously removed screws.
4. Assemble in reverse order.
5. Perform the Checkout Procedure found in Section 3.

9.23 Electrical enclosure components

⚠ **WARNING** Disconnect the power cord from the outlet receptacle before attempting to remove or repair any circuit board to avoid shock hazard.

⚠ **CAUTION** Disconnect the internal battery before attempting to remove or repair any circuit board. Failure to do so may damage the internal electronics.

⚠ **CAUTION** The circuit boards are electrostatic sensitive. Use an anti-static workstation and wear a wrist grounding strap when handling a circuit board.

To access the electrical enclosure components:

1. Disconnect the power cord.
2. Remove the lower electronic access panel (Section 9.2.2).
3. Disconnect the battery cable by pressing the lock tabs on either side of the connector and gently pulling on the connector.

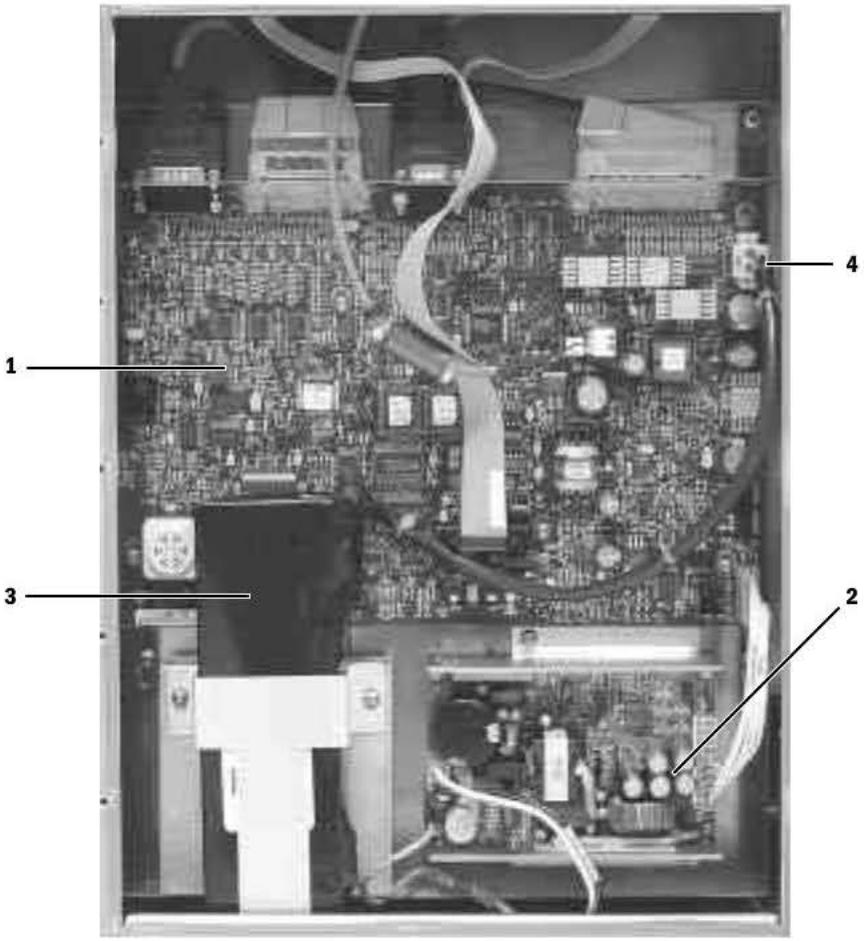

1. **Integrated CPU board**
2. **Power supply**
3. **Battery**
4. **Battery connector**

9.23.1 CPU Board

⚠ **CAUTION** The circuit boards are electrostatic sensitive. Use an anti-static workstation and wear a wrist grounding strap when handling a circuit board.

1. Disconnect the four cable connectors from the bottom of the CPU board.
2. Disconnect the remaining cables:
   - the serial interface ribbon cable near the bottom of the board. The cable goes to the DB-9 and DB-15 connectors on top of the electrical enclosure.
   - the power supply cable at the right side of the CPU board.
   - the task light harness.
3. Remove the hardware (**A**) at the upper left-hand corner that holds the CPU bracket to the tab on the mounting plate.
   Remove the five screws (**circled**) that hold the CPU board to the mounting plate of the electrical enclosure.

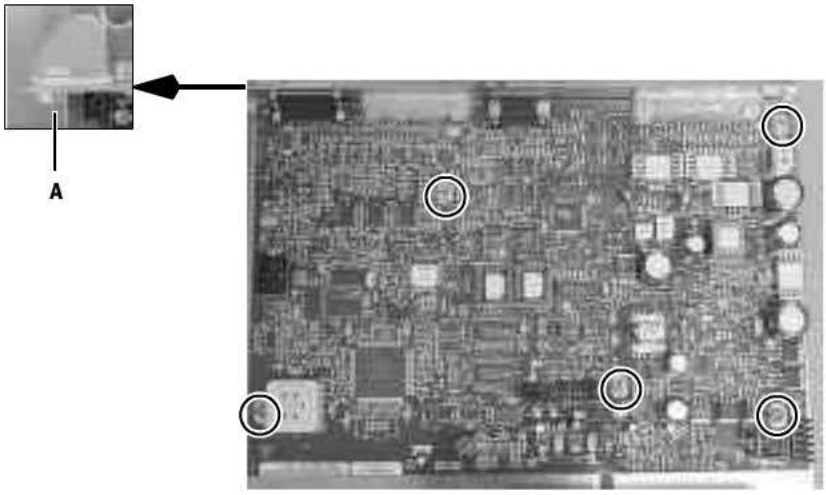

4. Lift and remove the board from the electrical enclosure.
5. Transfer the EEPROMs (U14 and U23) from the old board to the new board. (See *Section 9.23.2 Firmware replacement procedure* for information on safely handling the EEPROMs.)
6. Install the new board by following these instructions in reverse order.
7. Perform the CPU board tests found in Section 9.23.2.
8. Perform the Checkout Procedure found in Section 3.

9.23.2 Firmware replacement procedure

⚠ **CAUTION** The circuit board and EEPROMs are electrostatic sensitive. Use an approved static control workstation and wrist grounding strap.

1. Place the CPU board on an approved static control workstation.
2. Note the label and orientation of each EEPROM to ensure they are properly transferred to the replacement board.
3. Use a PLCC chip extraction tool to remove the two EEPROMs, U14 and U23. Insert the two prongs on the extractor tool into the slotted corners of the EEPROM socket.

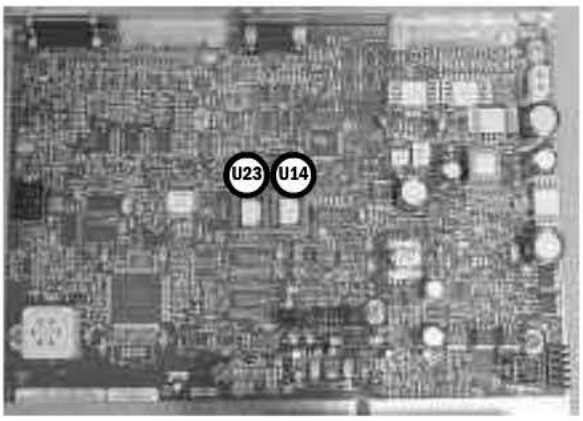

4. Install the new EEPROMs, noting the label to ensure the correct chip is placed in the correct socket. Align the EEPROM notch with the socket notch and press the chip down firmly.

CPU board tests Whenever you replace the CPU board and/or the EEPROMs (U14 and U23), or perform the software upgrade, perform the following tests:

- Select the altitude (Section 4.3.3.1 Altitude)*
- Select the drive gas (Section 4.3.3.2 Drive Gas)*
- Cal O_2 Sensor (Section 4.3.19)
- Cal Flow Sensor (Section 4.3.20)
- Cal Pressure Sensitivity (Section 4.3.21)
- Cal Flow Valve (Section 4.3.22)
- Cal Bleed Resistor (Section 4.3.23)
- Perform the Checkout Procedure found in Section 3.

* Even if these settings appear to be set correctly, they must be deliberately changed and set back to their proper setting.

9.23.3 Power supply

⚠ **CAUTION** The circuit boards are electrostatic sensitive. Use an anti-static workstation and wear a wrist grounding strap when handling a circuit board.

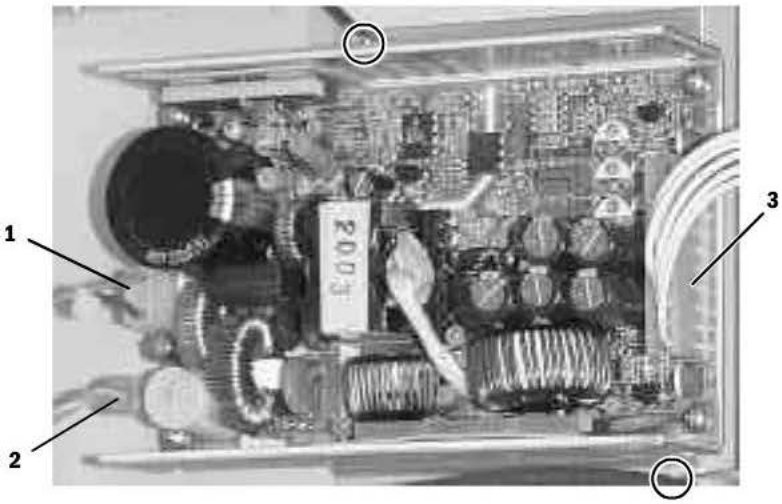

1. **Line power**
2. **Chassis ground**
3. **Power output**

4. Disconnect the line power inlet connector (**1**) and the ground wire (**2**).
5. Disconnect the power outlet connector (**3**).
6. Remove the two nuts that hold the power supply assembly to the mounting plate of the electrical enclosure.
7. Transfer the power supply mounting bracket to the new power supply.
8. To install a new power supply, follow the removal instructions in reverse order.
9. Perform the Checkout Procedure found in Section 3.

9.23.4 Battery

The battery is mounted on the back plate of the lower electrical enclosure.

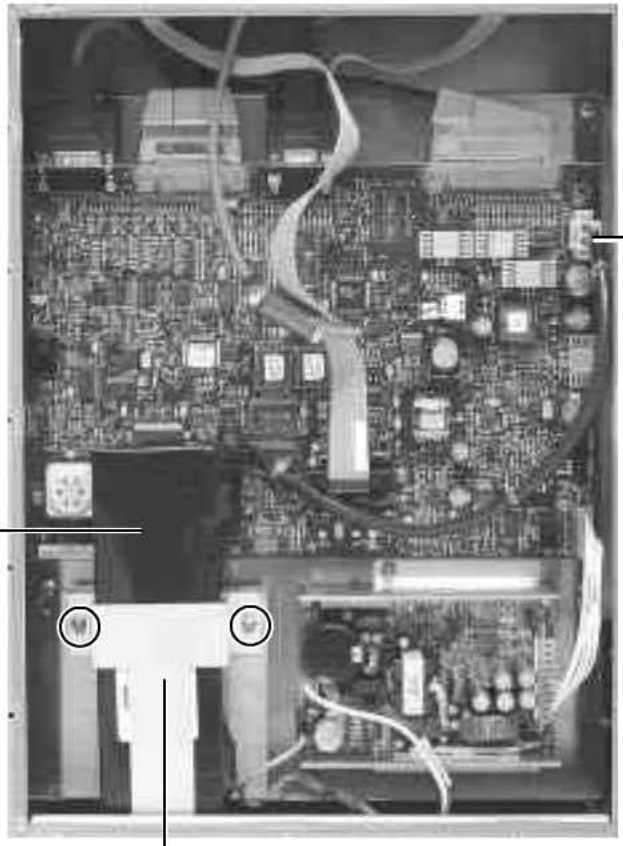

1. **Battery cable**
2. **Battery**
3. **Battery retainer**

4. Disconnect the battery cable by pressing the lock tabs on either side of the connector and gently pulling on the connector.
5. Remove the battery:
   - The battery is held in place with a formed bracket. To replace the battery, remove the two screws that retain the bracket.
6. Install a new battery by following these instructions in reverse order.
7. Perform the Checkout Procedure found in Section 3.
8. Allow the battery to charge.

9.23.5 Replace CPU cables

The four cables from the top edge connectors of the CPU board pass into the pan area through a cable raceway:

- Display cable
- Vent engine cable
- ESIB cable
- Machine switches cable (splits into three segments).

To replace these cables, you must remove the tabletop (Section 9.3).

Removing the raceway

1. Remove the four screws that hold the raceway plate to the pan.
2. Slide the plate to the left to release the raceway.

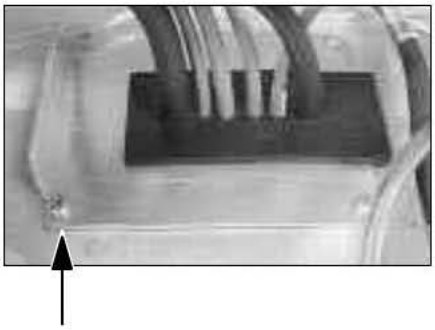

3. If replacing more than one cable, place the display cable (**A**) and the ESIB cable (**B**) in the raceway in the order shown. The remaining cables can occupy the inner slots in any order. Insure that all ferrites are below the pan.

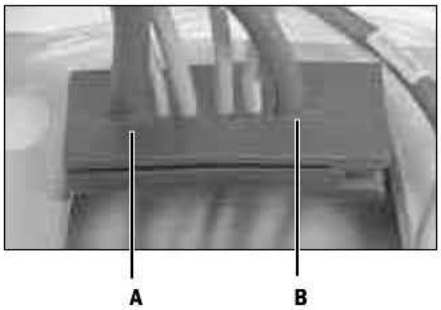

4. Slide the mounting plate into the side slots of the raceway.
5. Place the raceway over the right edge of the pan. Secure the plate to the pan.
6. Reassemble in reverse order.

9.24 Servicing the Vent Engine

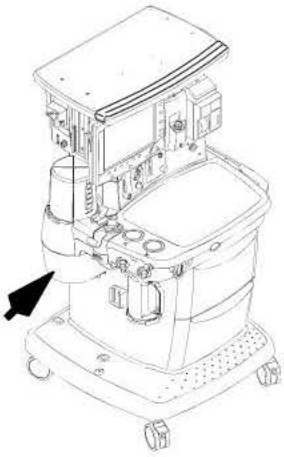

The Vent Engine is found in a housing located below the breathing system bellows assembly.

The Vent Engine includes the following subassemblies.

- Vent Engine Connector board (**1**)
- Gas Inlet Valve Assembly (**2**)
- Inlet Filter (**3**) - located under the gas inlet valve
- Inlet Valve Solenoid (**4**)
- Drive Gas Regulator (**5**)
- Flow Control Valve (**6**)
- Reservoir (**7**)
- Drive Gas Check Valve (**8**)
- Interface Manifold (**9**)

To replace any of the Vent Engine components, you must first remove the Vent Engine from the housing (refer to Section 9.24.1).

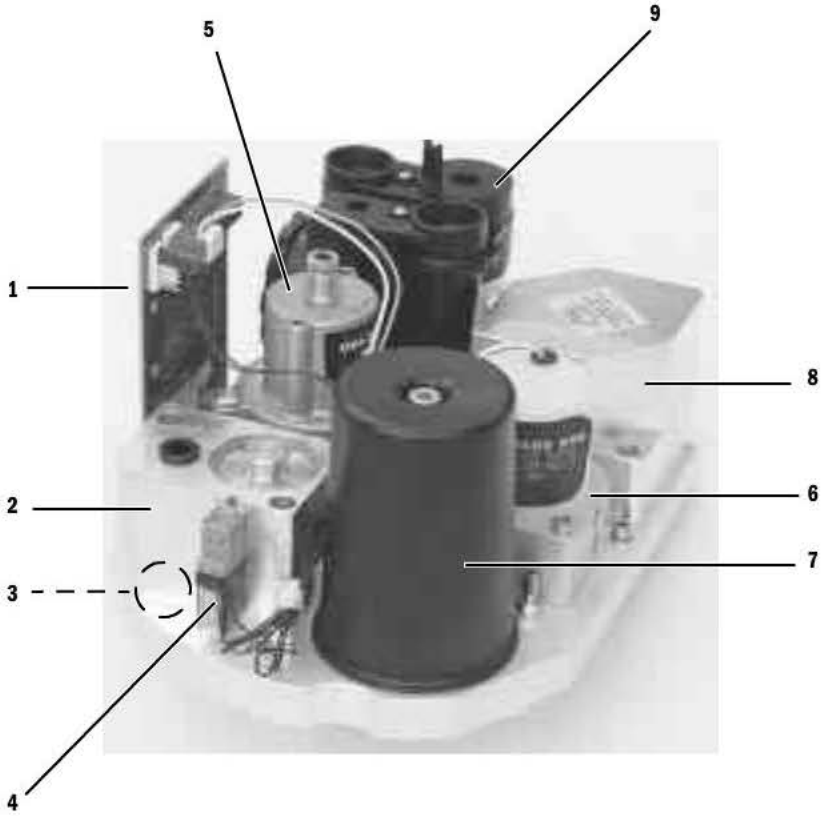

9.24.1 To remove the Vent Engine

1. Disconnect pipeline supplies; close cylinder valves; bleed off pressure.
2. Remove the ABS breathing system.
3. Remove the Exhalation valve.
4. Remove the scavenging downtube.
5. Loosen the five captive screws (**A**) that hold the Vent Engine cover to the housing. Raise the cover to access the Vent Engine.

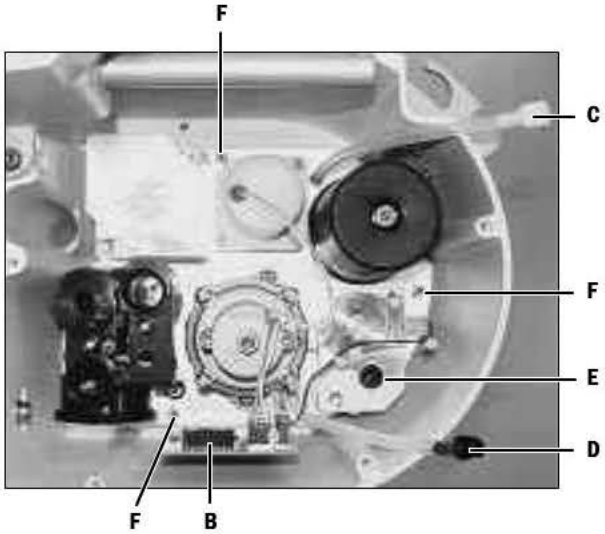

6. Disconnect the Vent Engine harness (**B**).
7. Disconnect the white tube-coupler (**C**) – inline with tube to manifold pressure transducer on the Ventilator Interface Board.
8. If present, disconnect the black tube-coupler (**D**), inline with tube to AGSS flow indicator.
9. Disconnect the drive gas hose (**E**).
10. Loosen the three captive screws (**F**) that hold the engine manifold to the housing.
11. Lift the Vent Engine out of the housing.
12. To replace the Vent Engine, reassemble in reverse order.

9.24.2 Replacing Vent Engine components

Refer to Section 6 for Vent Engine components that are to be serviced under regular maintenance. Most of the components on the Vent Engine can be replace by removing the mounting screws and remounting the replacement part in place.

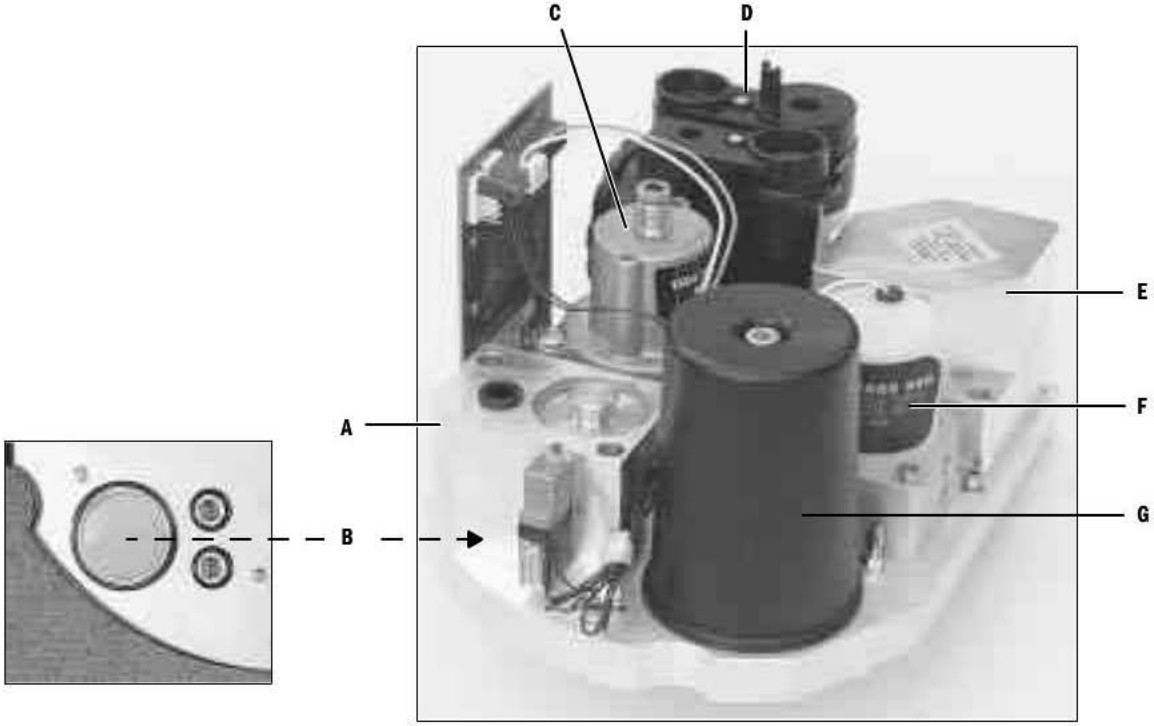

Gas Inlet Valve (A)
Inspect the two o-rings that seal it to the manifold. Replace as necessary.
To replace GIV shuttle valve components, refer to Section 9.24.3.

Inlet Filter (B)
Install the filter with the smooth side facing up.
Inspect the o-ring. Replace as necessary.

Regulator (C)
Inspect the two o-rings that seal it to the manifold. Replace as necessary.
Perform the Drive Gas Regulator calibration in Section 4.3.18.

Interface Manifold (D)
Inspect the two o-rings that seal it to the manifold. Replace as necessary.
Lubricate o-rings sparingly with Krytox.

Drive Gas Check Valve (E)
Inspect the o-ring that seal it to the manifold. Replace as necessary.
Clean the seat on the manifold and the seal on Drive Gas Check Valve with isopropyl alcohol.

Inspiratory Flow Valve (F)
Note orientation of the flow valve. Inspect the two o-rings that seal it to the manifold. Replace as necessary.
Perform the Inspiratory Flow Valve calibration in Section 4.3.22.

Reservoir (G)
Inspect the two o-rings: reservoir to manifold, reservoir to screw head.
Replace as necessary.

Inlet Valve Solenoid (H)
Inspect seal between solenoid and GIV body.
Replace as necessary (included with solenoid).

9.24.3 Replacing GIV components

Lubricate items marked with and asterisk (*) sparingly with Krytox.

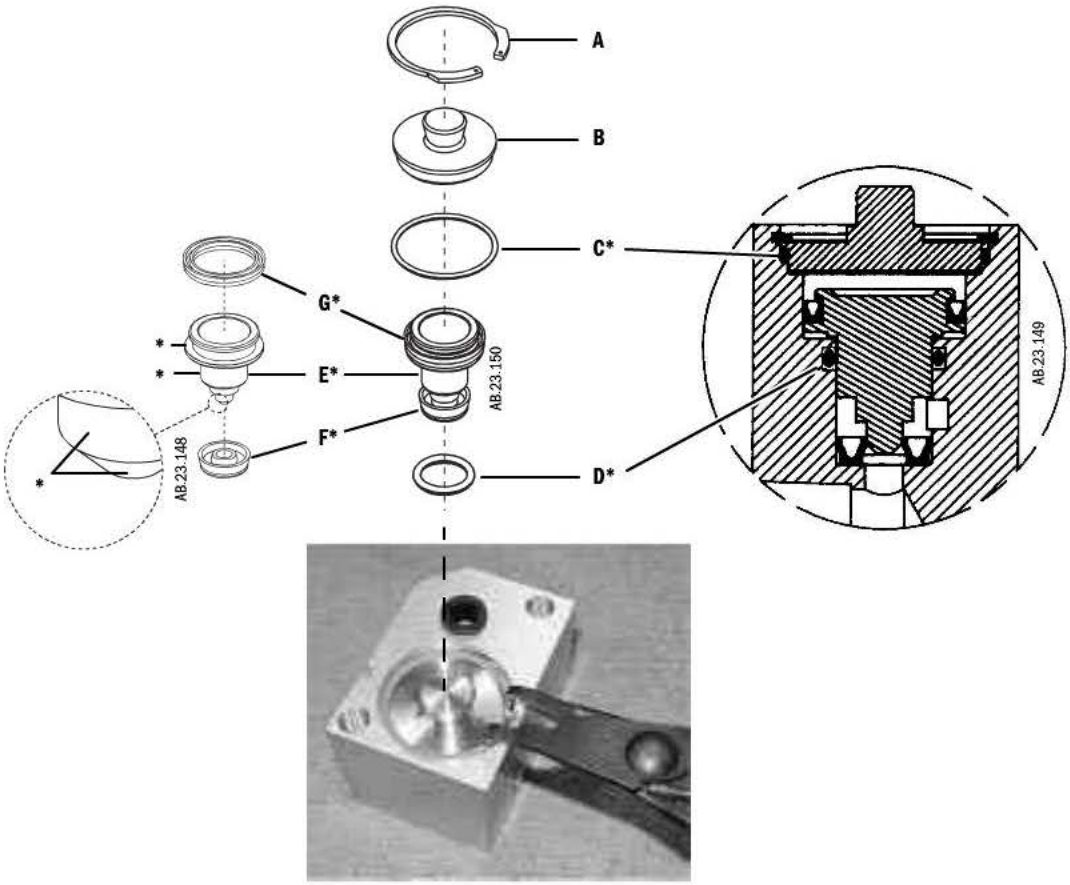

1. Remove the retaining ring (**A**) and the GIV cap (**B**).
2. Use pneumatic pressure to remove the shuttle. Cover the shuttle with a cloth and briefly apply pressure (connect the drive gas hose or use pipeline pressure) through the drive gas inlet.
3. Remove the upper o-ring (**C**) and the lower o-rings (**D**).
4. Install the lower o-ring (**D***).
5. Lubricate the shuttle (**E**) at the three areas (*) shown: the circumference of the shuttle where the upper and lower u-cup seals are placed and the body part of the shuttle that slides along the lower o-ring.
6. Install the lower u-cup seal (**F***) and the upper u-cup seal (**G***) on the shuttle.
7. Press the shuttle assembly into the GIV manifold.
8. Install the upper o-ring (**C***).
9. Install the cap (**B**) and the retaining ring (**A**).
10. Reassemble in reverse order.

10 Illustrated Parts

In this section

10.1 Service tools 10-3
10.1.1 Software 10-3
10.1.2 Secondary regulator pilot pressure tool 10-3
10.1.3 Test Devices 10-4
10.1.4 Lubricants and Adhesives 10-4
10.1.5 Test Tools 10-5
10.2 External components - front view 10-6
10.3 External components - front view references 10-7
10.4 External Components - rear view 10-8
10.5 Front panel, gauges and system switch 10-9
10.6 Rear panel components 10-10
10.7 Tabletop components 10-11
10.8 Right-side Components 10-12
10.9 External components - lower assembly 10-13
10.10 Drawer 10-14
10.11 AC Power cords 10-15
10.12 AC Inlet/Outlet Components 10-16
10.13 Pipeline inlet fittings 10-18
10.14 Cylinder Gas Supplies 10-19
10.14.1 Cylinder inlet fittings 10-20
10.15 Vaporizer manifold 10-21
10.16 Flowmeter components 10-22
10.16.1 Flowtube parts 10-24
10.16.2 Secondary regulator components 10-26
10.17 ABS to machine Interface Components 10-28
10.17.1 Flush Valve and ACGO Selector Switch 10-29
10.18 Breathing system interface 10-30

10.19 Breathing System 10-31
10.19.1 APL Valve 10-31
10.19.2 Bag/Vent Switch 10-32
10.19.3 Absorber canister 10-33
10.19.4 Flow Sensor Module 10-34
10.19.5 Breathing Circuit Module 10-35
10.19.6 Exhalation valve 10-36
10.19.7 Bellows 10-37
10.19.8 Bellow base 10-38
10.19.9 Bag Arms 10-39
10.20 Electrical enclosure (lower) parts 10-40
10.21 Display Module 10-42
10.21.1 Rear housing parts 10-42
10.21.2 Front housing parts 10-43
10.22 Vent Engine Housing 10-44
10.23 Vent Engine 10-45
10.23.1 Vent Engine - under side 10-46
10.24 Legris quick-release fittings 10-47
10.25 Vent Drive and low-pressure tubing 10-48
10.26 Tubing for use with Legris fittings 10-50
10.27 Cables and harnesses 10-52
10.28 Anesthetic Gas Scavenging System – AGSS 10-54
10.28.1 Passive AGSS 10-54
10.28.2 Adjustable AGSS 10-56
10.28.3 Active AGSS 10-58
10.29 Integrated Suction Regulator 10-60
10.29.1 Major Components (Continuous and Venturi suction) 10-60
10.29.2 Suction Control Module 10-61
10.29.3 Venturi assembly 10-62
10.30 Auxiliary O_2 Flowmeter 10-63
10.31 Serial and task light cable, AGSS flowtube, and sample return 10-64
10.32 Display mounts 10-65
10.32.1 Long arm 10-65
10.32.2 Folding mount 10-66
10.33 Cable management arm 10-67
10.34 Display arm mounting kits for optional equipment 10-68

10.1 Service tools

10.1.1 Software

Item	Description	Stock Number
U14/U23	Aespire 7900 Rev 4.6 Basic	1009-8435-000
	Aespire 7900 Rev 4.6 PSVPro	1009-8437-000

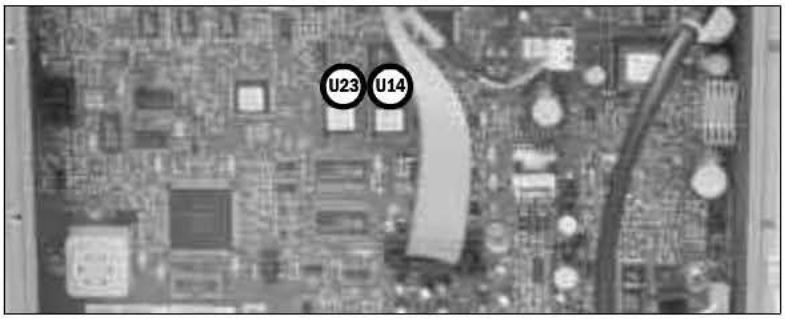

10.1.2 Secondary regulator pilot pressure tool

Assemble the secondary regulator pilot pressure tool using a 4-mm tee and tubing as shown. This tool is used with N_2O needle valve calibration.

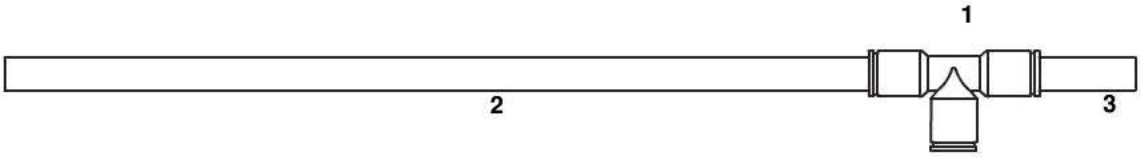

Item	Description	Stock Number
1	Tee, 4 mm, tube/tube/tube	1202-3653-000
2	Tubing, 4 mm (approximately 450 mm - 18 inches)	1001-3060-000
3	Tubing, 4 mm (approximately 50 mm - 2 inches)	1001-3060-000

10.1.3 Test Devices

Item	Tool	Stock Number
1	Test flowmeter, 6–50 L/min (Suction Flow Test)	1006-8431-000

1

Not Shown

Low-pressure Leak Test Device (negative pressure)	0309-1319-800
Low-pressure Leak Test Device (positive pressure - ISO)	1001-8976-000
Low-pressure Leak Test Device (positive pressure - BSI)	1001-8975-000
Flow test device capable of measuring 0–15 L/min with an accuracy of ±2% of reading	Refer to section 6.5
Vacuum test gauge capable of measuring 0 to 550 mm Hg with an accuracy of ±1% of reading	Refer to section 6.6
Test device capable of measuring 0–30 L/min (see Item 1 above)	Refer to section 6.6
Leakage current test device	Refer to section 3.15
Test device capable of measuring 689 kPa (100 psi)	Refer to section 5.1
Low-pressure test device (digital manometer or test gauge) with an accuracy of ±2% of reading	Refer to section 5.5.2

10.1.4 Lubricants and Adhesives

Item	Description	Stock Number
1	Lubricant, Krytox GPL 205, 2 oz	1001-3854-000
2	Thread Lock, Loctite No 24221, 10 ml	0220-5017-300

10.1.5 Test Tools

Item	Tool	Stock Number
1	Leak Test Tool Kit, ABS breathing system	1407-7013-000
1a	Test Tool, bulkhead	1407-8500-000
1b	Plug, tapered 27x12 mm	1407-8505-000
1c	Plug, tapered 24x18 mm	1407-8506-000
1d	Test Tool, circle module (2 each)	1407-8502-000
1e	Plug, service B/S 11 mm (2 each)	1407-8504-000
1f	Plug, service BTV 18 mm (2 each)	1407-8503-000
2	Plug, stopper	2900-0001-000
3	Adapter, positive low-pressure leak test	1009-3119-000
4	Vaporizer Manifold Valve Test Tool	1006-3967-000
Not Shown		
	Tool to help disconnect tubing from Legris fittings	2900-0000-000
	Test Lung	0219-7210-300
	Leak detection fluid, Snoop	obtain locally

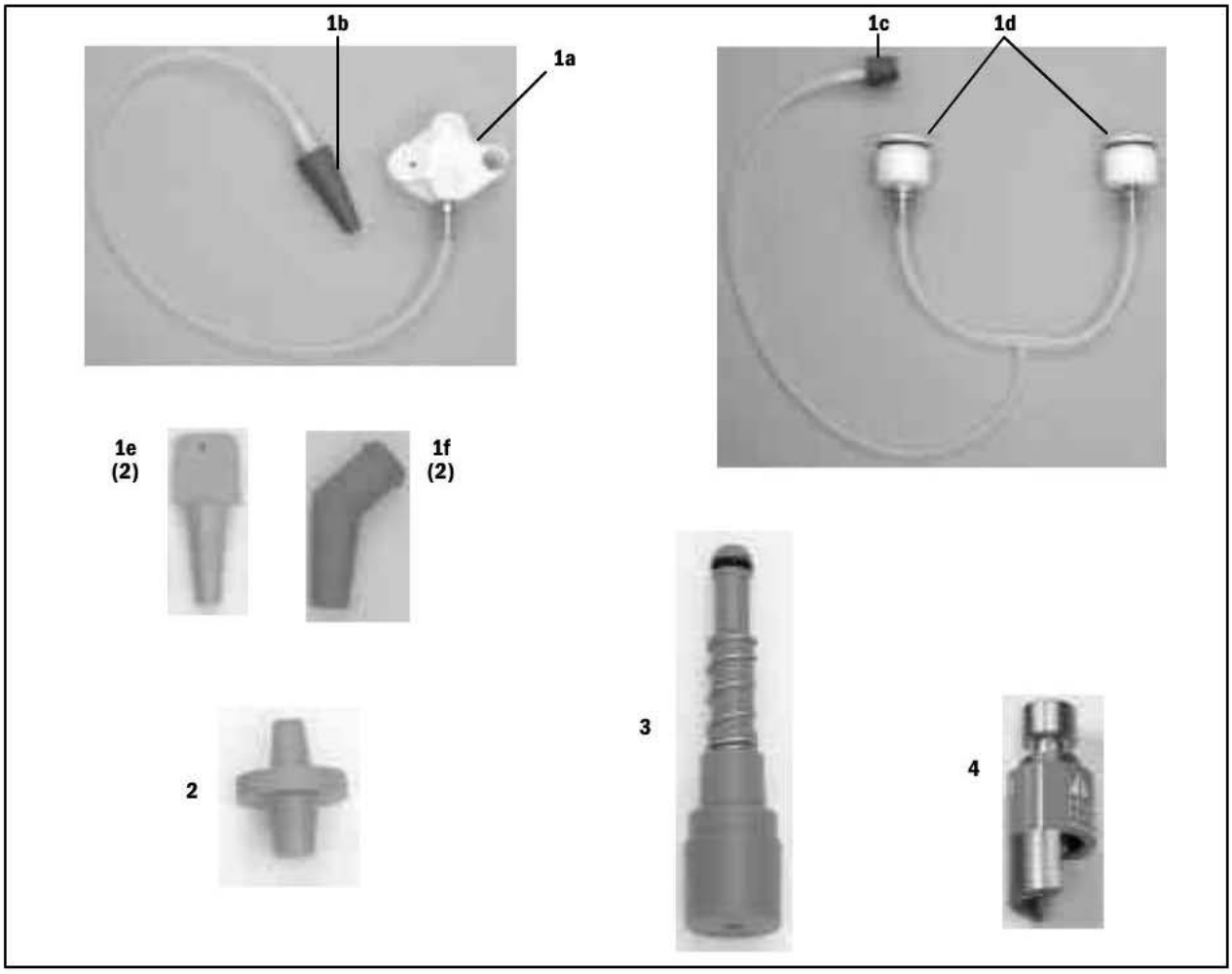

10.2 External components - front view

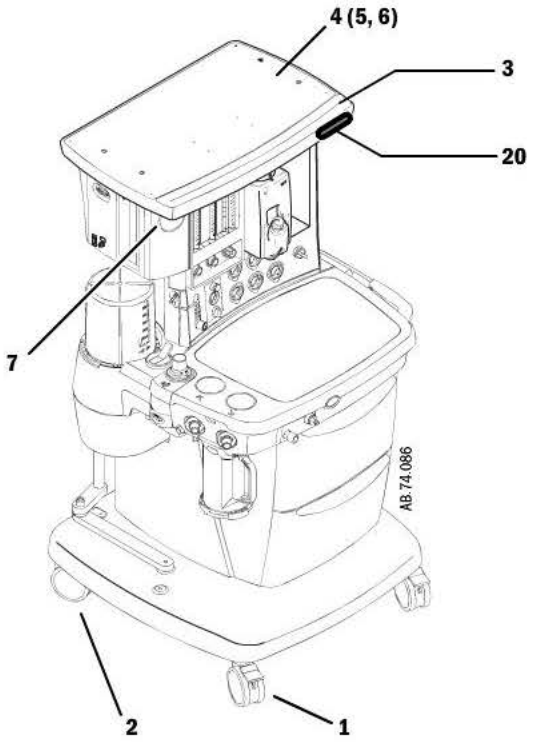

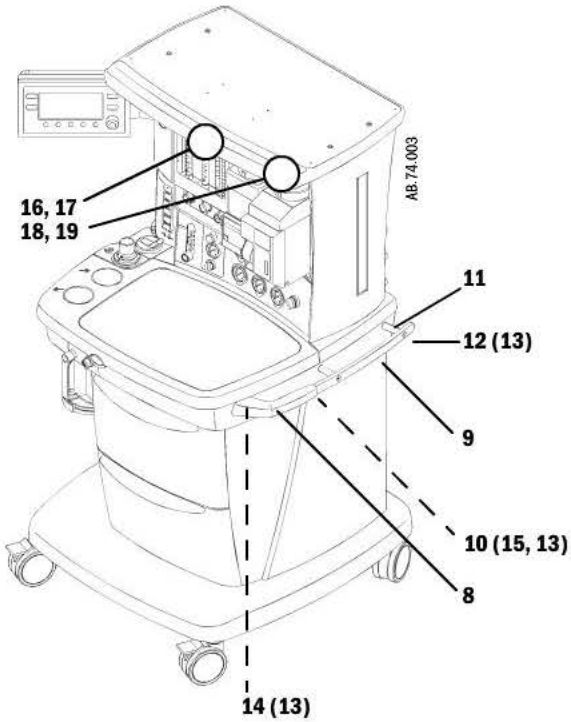

Item	Description	Stock Number
1	Caster, 125-mm with brake (front)	1006-3070-000
2	Caster, 125-mm no brake (rear)	1006-3071-000
3	Cover, cable channel	1009-3020-000
4	Upper shelf	1009-3022-000
5	Bolt, M6x40	0144-2131-911
6	Lockwasher, M6 internal	0144-1118-130
7	Gauge, airway pressure (includes mounting hardware)	1009-3034-000
8	Handle, side	1009-3033-000
9	Handle, Medirail	1009-3101-000
10	Screw, M6x12 Sems	0144-2436-106
11	Spacer	1009-3102-000
12	Screw. M6x70	0144-2131-923
13	Lockwasher M6 external	9213-0560-003
14	Screw, M6x20	0144-2131-921
15	Shim	1009-3131-000
16	Task Light PCB	1009-5504-000
17	Lens, Task Light	1011-3308-000
	Screw	0142-4254-106
18	Switch Assembly, task light	1009-5587-000
19	Plate, switch mounting retainer	1009-3143-000
	Screw	0140-6226-107
20	Label, S/5 Aespire	1009-3187-000

10.3 External components - front view references

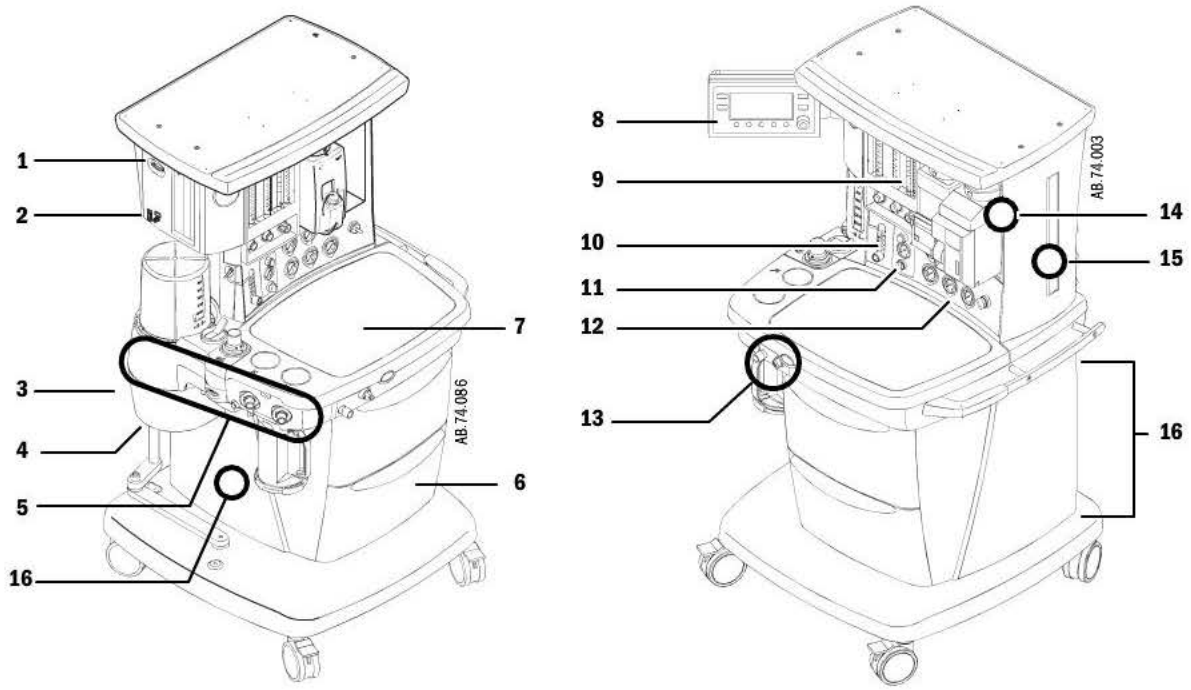

Item	Description	Section number
1	"Serial board"	Refer to section 10.31
2	"AGSS gauge, and sample return"	Refer to section 10.31
3	"Vent Engine Housing"	Refer to section 10.22
4	"Anesthetic Gas Scavenging System — AGSS"	Refer to section 10.28
5	"Breathing System"	Refer to section 10.19
6	"Drawer"	Refer to section 10.10
7	"Tabletop components"	Refer to section 10.7
8	"Display cables" "Long arm"	Refer to section 10.31 Refer to section 10.32.1
9	"Flowmeter components"	Refer to section 10.16
10	"Auxiliary O_2 Flowmeter"	Refer to section 10.30
11	"Integrated Suction Regulator"	Refer to section 10.29
12	"Front panel, gauges and system switch"	Refer to section 10.5
13	"ABS to machine Interface Components"	Refer to section 10.17
14	"Vaporizer manifold"	Refer to section 10.15
15	"Right-side Components"	Refer to section 10.8
16	"External components - lower assembly"	Refer to section 10.9

10.4 External Components - rear view

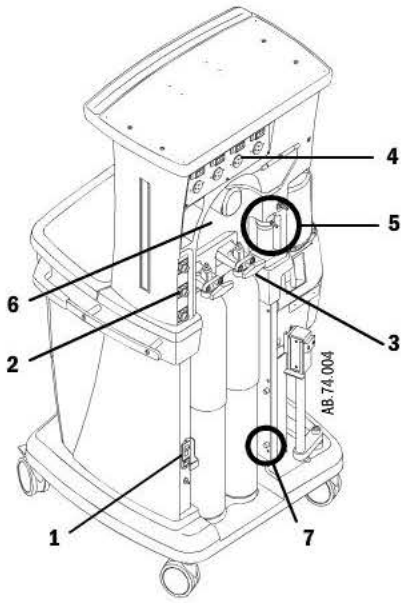

Item	Description	Stock Number
1	AC Inlet	Refer to section 10.11
2	Pipeline Inlets	Refer to section 10.13
3	Cylinder Gas Supplies	Refer to section 10.14
4	Electrical Power Outlet	Refer to section 10.12
5	Suction items	Refer to section 10.29
6	Rear panel items	Refer to section 10.6
7	Thumbscrew Ring, retainer	1406-3304-000 1406-3319-000

10.5 Front panel, gauges and system switch

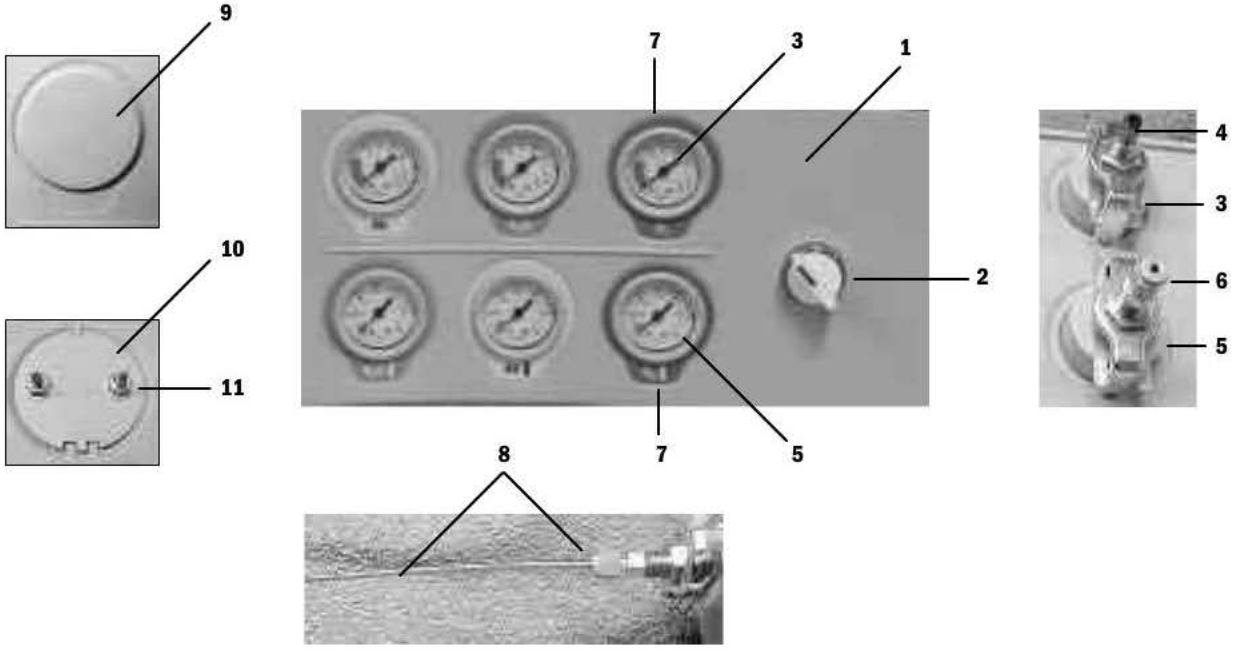

Item	Description	Stock Number	Stock Number (pipeline)	Stock Number (cylinder)
1	Panel, gauge front	1009-3018-000		
2	Switch, D-O system	1006-8452-000		
3	Gauge, low pressure (includes mounting hardware)		1009-3079-000	
4	Connector, 1/8 inch Legris to 10-32		1006-3711-000	
5	Gauge, high pressure (includes mounting hardware)			1009-3080-000
6	Connector, 1/8 inch copper tube to 5/16-24			1006-3712-000
7	Label, gauge	O_2 ANSI	1009-3081-000	1009-3199-000
		N_2O ANSI	1009-3082-000	1009-3201-000
		Air ANSI	1009-3083-000	1009-3200-000
		O_2 ISO	1009-3202-000	1009-3204-000
		N_2O ISO	1009-3082-000	1009-3201-000
		Air ISO	1009-3203-000	1009-3205-000
		O_2 Neutral	1009-3234-000	1009-3237-000
		N_2O Neutral	1009-3235-000	1009-3238-000
		Air Neutral	1009-3236-000	1009-3239-000
8	Tube Kit, copper tube and fittings (inboard cylinder)	1006-8371-000		
	Tube Kit, copper tube and fittings (3rd gas)	1006-8372-000		
9	Plate, gauge blanking	1009-3045-000		
10	Plate, gauge blank backing	1009-3147-000		
11	Palnut	1009-3090-000		

10.6 Rear panel components

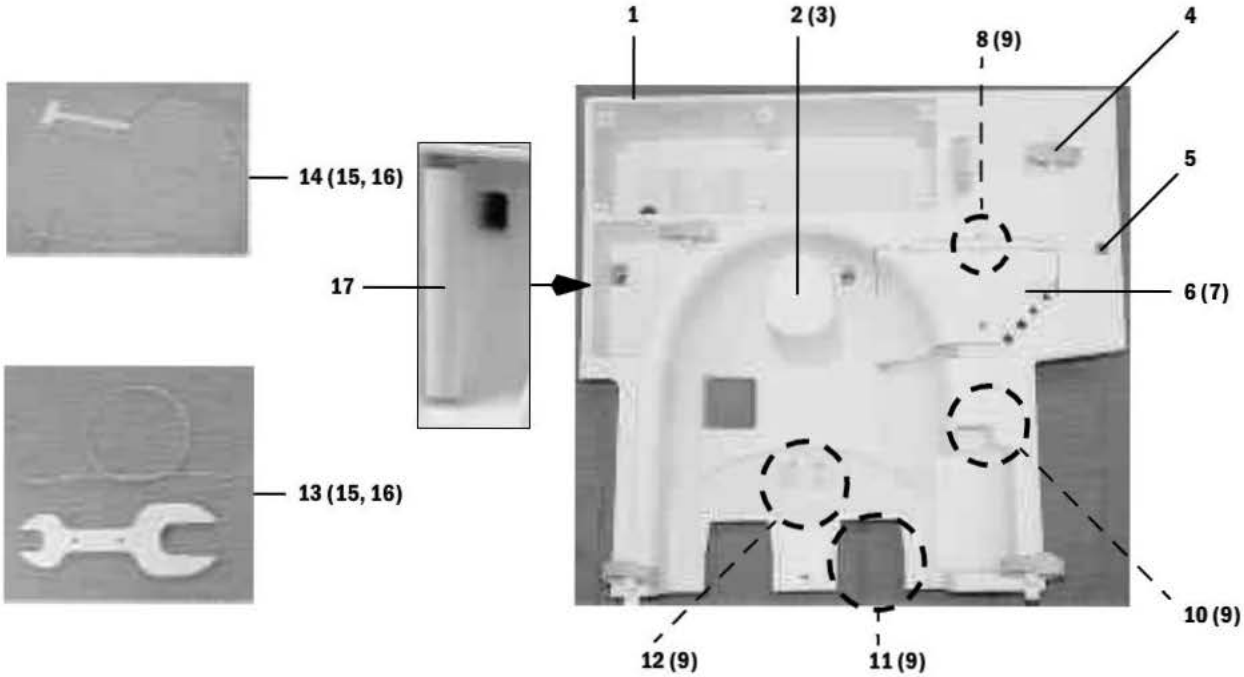

Item	Description	Stock Number
1	Cover, rear upper	1009-3073-000
2	Cap, hose reel	1009-3075-000
3	Screw, M5.5x20	1009-3384-000
4	Strap, hook/loop	1009-3233-000
5	Screw, M6x1.0 captive	1009-3114-000
6	Door, access (not functional for Aespire)	1009-3074-000
7	Screw, M4x12	1009-3109-000
8	Spring, cantilever	1009-3124-000
9	Screw, M3x8	0142-4254-106
10	Cover, trap bottle (if no internal suction)	1009-3173-000
11	Cover, regulator yoke (if no regulator)	1009-3121-000
12	Plate, clip cover	1009-3185-000
13	Wrench, DIN cylinder (without cable)	1202-3651-000
14	Wrench, pin index cylinder (with cable)	0219-3415-800
15	Cable	1010-3049-000
16	Ferrule, cylinder wrench cable retainer	1001-3708-000
17*	Handle, P-grip	1009-3343-000

* Clean mounting surface with isopropyl alcohol.

10.7 Tabletop components

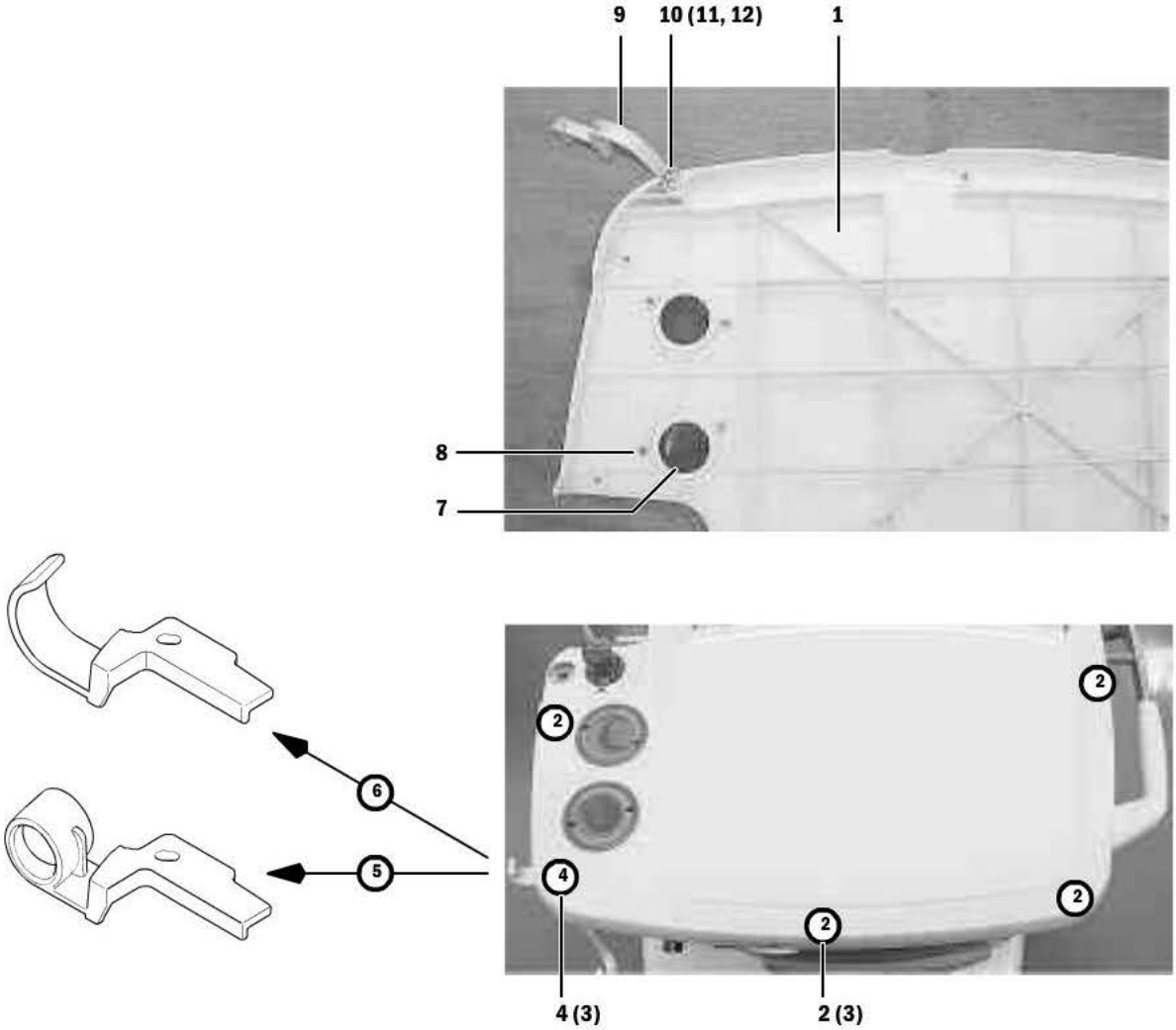

Item	Description	Stock Number
1	Tabletop, work surface	1009-3029-000
2	Screw, relieved M4x12	1504-3001-000
3	Washer, retainer	1009-3178-000
4	Screw, relieved M4x16	1011-3980-000
5	Clip (used with bag arm)	1009-3142-000
6	Clip (used with bag on hose)	1009-3139-000
7	Window, check-valve	1009-3088-000
8	Palnut	1009-3090-000
9	Hook, breathing circuit	1009-3086-000
10	Bolt, shoulder	1009-3172-000
11	Washer, wave	1009-3035-000
12	Washer, Nylon	1009-3150-000

10.8 Right-side Components

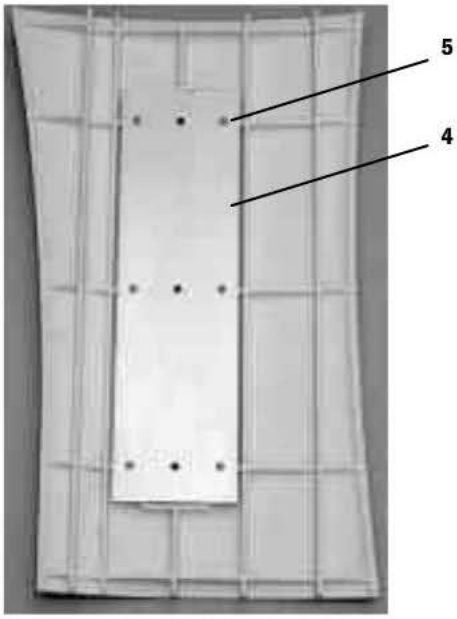

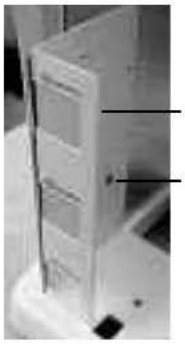

Item	Description	Stock Number
1	Extrusion cover	1009-3021-000
2	Screw, M6x20	0144-2131-921
3	Lockwasher, M6 internal	0144-1118-130
4	Dovetail, RH upright	1009-3129-000
5	Screw, M4x10 self-tapping	1009-5534-000
6	Cover, pipeline inlet	1009-3091-000
7	Screw, M4x8	1006-3178-000

10.9 External components - lower assembly

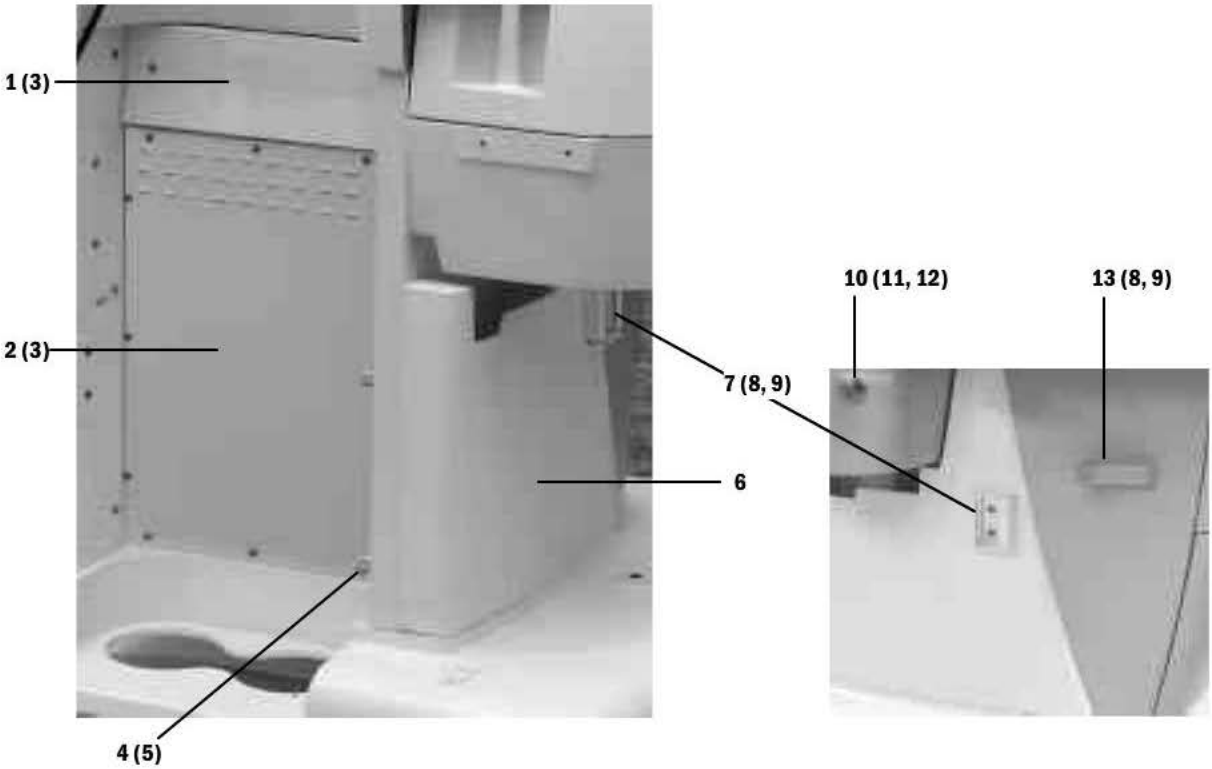

Item	Description	Stock Number
1	Panel, access	1009-3059-000
2	Panel, service	1009-3141-000
3	Screw, M4x8	1006-3178-000
4	Thumbscrew	1406-3304-000
5	Ring, retaining	1406-3319-000
6	Cover, scavenger reservoir	1009-3027-000
7	Bracket, suction reservoir	1009-3107-000
8	Screw, M4x16	9211-0440-163
9	Lockwasher, M4 external	9213-0540-003
10	Clip, suction bag hose	1407-3327-000
11	Screw, M5x16 PAN HD	9211-8350-163
12	Lockwasher, M5 external;	0144-1118-220
13	Bumper, absorber	1009-3105-000

10.10 Drawer

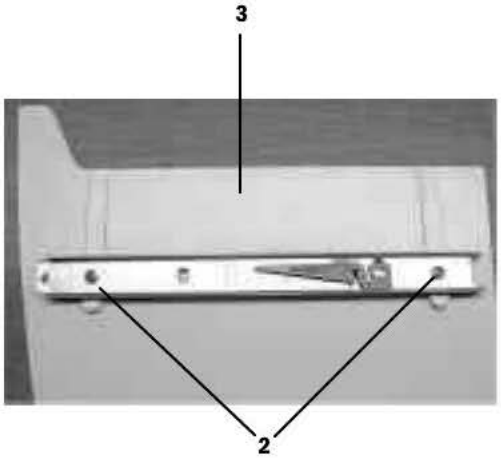

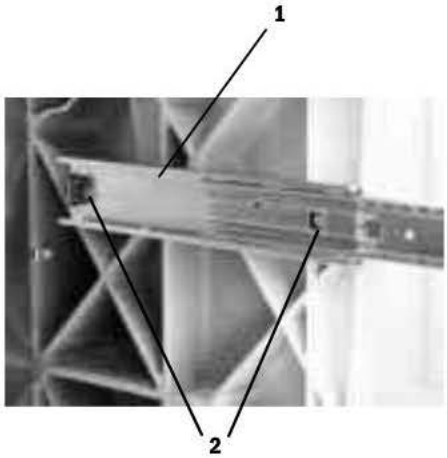

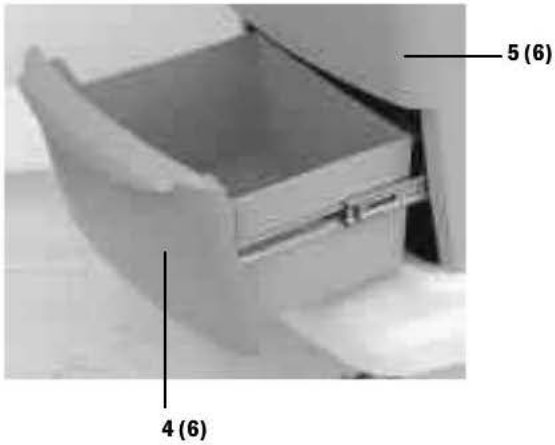

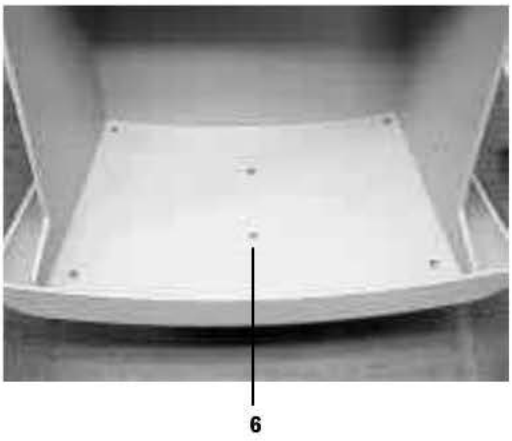

Item	Description	Stock Number
1	Slide, drawer	1009-3084-000
2	Screw, M4x8 Nyloc	1009-3183-000
3	Drawer, body	1009-3078-000
4	Drawer Front, lower (down arrow)	1009-3032-000
5	Drawer Front, upper (up arrow)	1009-3031-000
6	Screw, M4x12	1009-3109-000

10.11 AC Power cords

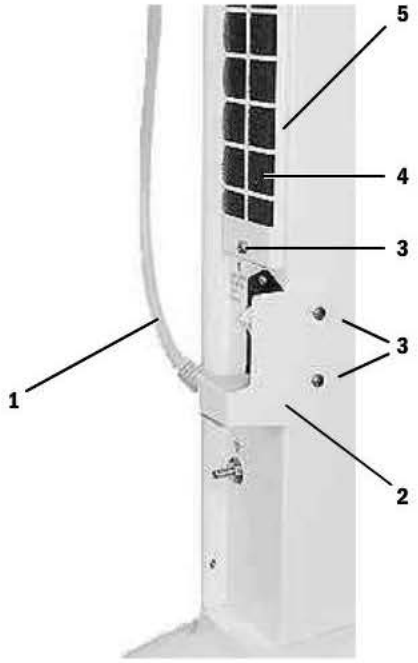

Item	Description	Stock Number
1	Power Cord	
	Australia and China, 220-240 VAC AS 3112 outlets	1006-3888-000
	EURO and France, 220 VAC with CEE 7/7	1001-3380-000
	India and South Africa, 220-240 VAC BS546	1006-3885-000
	Japan and US, 100-120 VAC NEMA	1006-3907-000
	Peru, 220-240 VAC NEMA	1006-3889-000
	Swiss, 220-240 VAC SEV 1011	1006-3889-000
	UK, 220-240 VAC BS1363	1006-3884-000
2	Clamp, power cord retainer	1009-3103-000
3	Screw, M4x8 Pozidriv	0140-6226-113
4	Filter, foam	1009-3064-000
5	Retainer, filter	1009-3058-000

10.12 AC Inlet/Outlet Components

Item	Description	Stock Number
1	Inlet, 100/120 AC, with line filter and 15 A circuit breaker	1009-5698-000
	Inlet, 220/240 AC, with line filter and 8 A circuit breaker	1009-5757-000
2	Fuse, 5A - 5x20mm	1009-5779-000
	Fuse holder	1009-5674-000
3	Circuit board, Inrush, 100-120V	1006-3245-000
	Circuit board, Inrush, 220-240V	1006-3246-000
4	Filter, AC Line, 6VW1, 100-240V	1009-5690-000
5	Stud, Equal Potential, 6 mm	0208-0070-300
6	Harness, 100/120 V to Toroid	1009-5752-000
	Harness, 220/240 V to Toroid	1009-5753-000
7	Harness, to 100/120 V outlets	1009-5716-000
	Harness, to 220/240 V outlets	1009-5717-000
8	Outlet Receptacle, Australia, AS 3112	1001-3305-000
	Outlet Receptacle, EURO, CEE 7/7	1202-3551-000
	Outlet Receptacle, France, CEE 7/4	1006-4421-000
	Support Frame, snap in	1006-4422-000
	Outlet Receptacle, India and South Africa, BS 546	1006-3805-000
	Outlet Receptacle, Japanese	1006-3578-000
	Outlet Receptacle, NA, Nema 5-15	1006-3555-000
	Outlet Receptacle, Swiss, SEV 1011	1006-3807-000
	Outlet Receptacle, UK, BS1363	1001-3309-000
9	Circuit Breaker, 1A, Rocker	1009-5722-000
	Circuit Breaker, 2A Rocker	1009-5721-000
	Circuit Breaker, 3A Rocker	1009-5720-000
	Circuit Breaker, 4A Rocker	1009-5719-000
10	Toroid, 100-240V	1009-5692-000
11	Screw, M6x70	0144-2131-923
12	Lockwasher, M6	9213-0560-003
13	Washer	0402-1107-500
14	Cover, transformer	1009-3063-000
15	Screw, M4x8 DIN84 (for transformer cover)	1006-3178-000

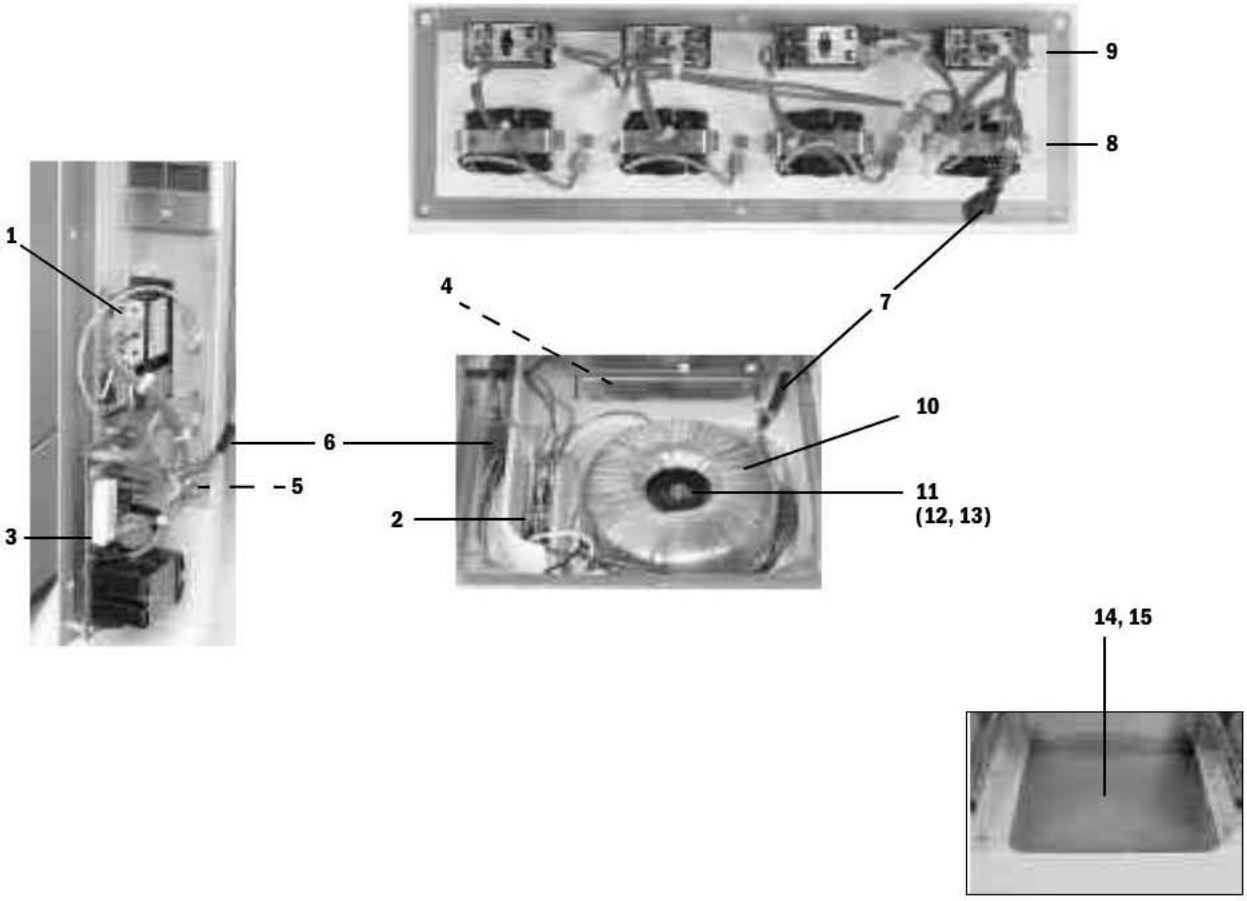
9
8
1
4
7
10
6
5
11
(12, 13)
2
3
14, 15

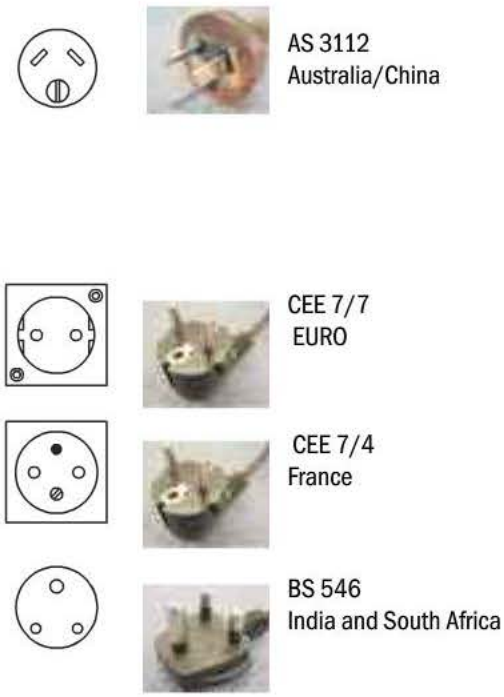
AS 3112
Australia/China
CEE 7/7
EURO
CEE 7/4
France
BS 546
India and South Africa

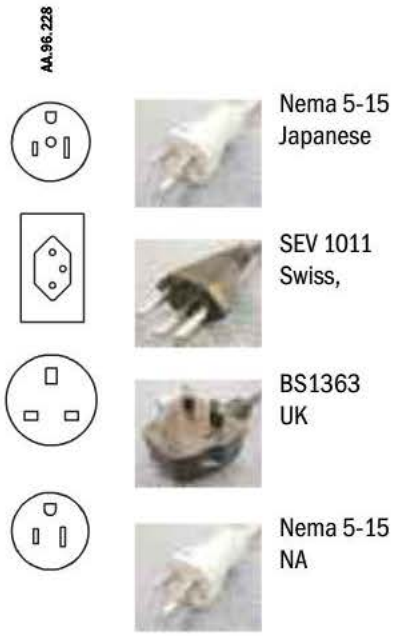
AA.96.228
Nema 5-15
Japanese
SEV 1011
Swiss,
BS1363
UK
Nema 5-15
NA

10.13 Pipeline inlet fittings

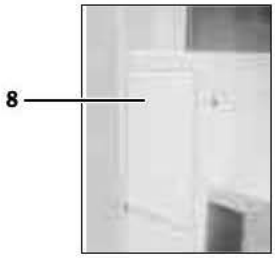

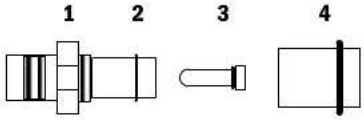

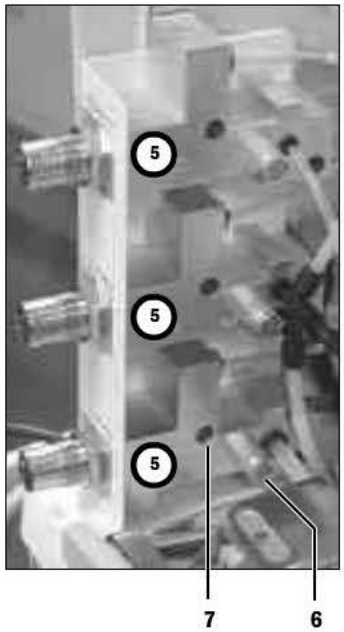

Item	Description		Stock Number
1	**Pipeline inlet - O_2 fittings**		----------
	Body, O_2 DISS		1006-5149-000
	Body, O_2 NIST		1006-5158-000
	Body, O_2 DIN		1006-5161-000
	Body, O_2 G 3/8 BSPP		1006-5170-000
	Pipeline inlet assembly O_2 France		1006-8363-000
	Pipeline inlet assembly O_2 Canada		1006-8360-000
	Pipeline inlet assembly O_2 Australia		1006-8396-000
1	**Pipeline inlet - N20 fittings**		----------
	Body, N_2O DISS		1006-5150-000
	Body, N_2O NIST		1006-5159-000
	Body, N_2O DIN		1006-5162-000
	Body, N_2O G 3/8 BSPP		1006-5171-000
	Pipeline inlet assembly N_2O France		1006-8362-000
	Pipeline inlet assembly N_2O Canada		1006-8359-000
	Pipeline inlet assembly N_2O Australia		1006-8397-000
1	**Pipeline inlet Air fitting**		----------
	Body, Air DISS		1006-5151-000
	Body, Air NIST		1006-5160-000
	Body, Air DIN		1006-5163-000
	Body, Air G 3/8 BSPP		1006-5172-000
	Pipeline inlet assembly Air France (service kit)		1006-8361-000
	Pipeline inlet assembly Air Canada (service kit)		1006-8358-000
	Pipeline inlet assembly Air Australia (service kit)		1006-8398-000
2	O-ring, bore seal		----------
	O_2 and N_2O		0210-0479-300
	Air		0210-0539-300
3	Sintered metal filter with o-ring		1006-8351-000
4	Pipeline checkvalve with o-ring		1006-3160-000
5	Gas Inlet Manifold (replacement)	O_2	1009-8066-000
		N_2O	1009-8067-000
		Air	1009-8068-000
6	Relief valve, 758 kPa (110 psi)		1011-3049-000
7	Screw, M4x20		0144-2124-218
	Lockwasher, M4 external		9213-0540-003
8	Label, pipeline inlet blank		1009-3197-000

10.14 Cylinder Gas Supplies

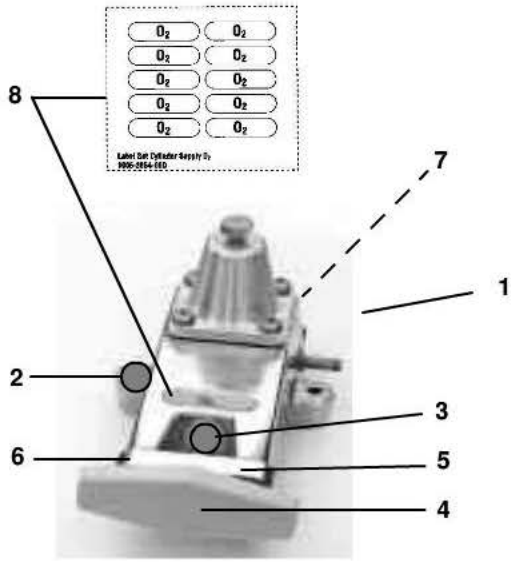

Item	Description	Pin Index (Inboard)	DIN (Inboard)	DIN, Large Cylinder (Inboard)
1	Gas supply O_2	1006-3201-000	1006-3207-000	1006-3880-000
1	Gas supply N_2O	1006-3202-000	1006-3208-000	1006-3881-000
1	Gas supply Air	1006-3203-000	1006-3209-000	- - - - -

Item	Description	Stock Number
2	Standoff (3 per supply)	1009-3085-000
	Screw, M6x80 socket head cap (3 per supply)	0144-2131-913
	Lockwasher, M6 external (for above screw)	9213-0560-003
3	Cylinder inlets (Pin Index or DIN for external cylinder)	Refer to section 10.14.1
4	Tee handle beige	0219-3372-600
5	Clamp, yoke	1001-4076-000
6	Spacer, gas block (2)	1001-4077-000
	Screw, M8 x 25 long socket head cap (2)	9211-0680-253
7	Elbow fitting for cylinder pressure gauge (copper tube connection of gas supply)	1006-3713-000
8	Label Set, cylinder supply, O_2	1006-3854-000
	Label Set, cylinder supply, N_2O	1006-3855-000
	Label Set, cylinder supply, Air	1006-3856-000

10.14.1 Cylinder inlet fittings

1 Pin Index

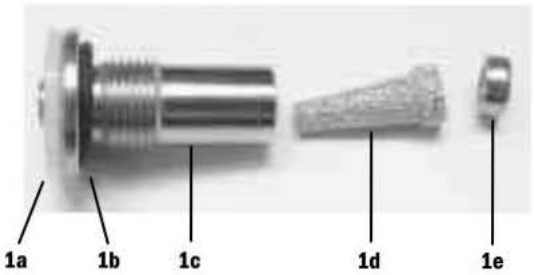

2 DIN (external cylinder)

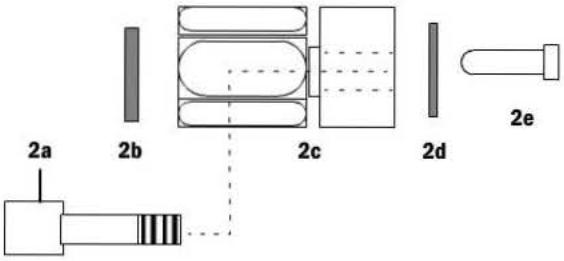

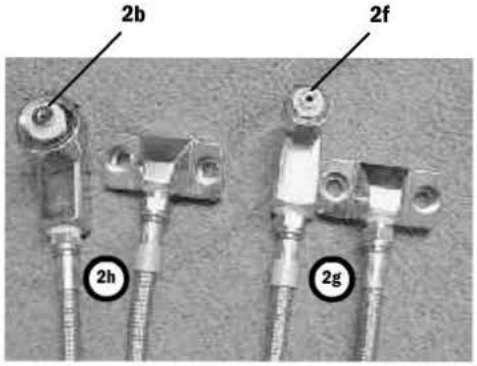

Item		Description	Stock Number
1		**Cylinder inlets (Pin Index)**	----------
	1a	Gasket	0210-5022-300
	1b*	O-ring	9221-3013-116
	1c	Adapter, inlet	1001-4075-000
	1d	Filter, sintered bronze	9914-6380-000
	1e	Retaining ring, filter	1001-5954-000
2		**Cylinder inlets (DIN)**	----------
	2a	Screw, M8x16	0144-2140-242
	2b	Sealing ring (DIN)	1009-3356-000
	2c	DIN Adapter (O_2)	1006-4000-000
		DIN Adapter (N_2O)	1006-4001-000
		DIN Adapter (Air)	1006-4002-000
	2d	O-ring, 0.687 ID, 0.812 OD	0210-0544-300
	2e	Filter, sintered bronze	9914-6380-000
	2f	Sealing ring, N_2O DIN Conn 11	1202-3641-000
	2g	Adapter, large cylinder N_2O	1006-4028-000
	2h	Adapter, large cylinder O_2	1006-4027-000

* Lubricate sparingly with Krytox

10.15 Vaporizer manifold

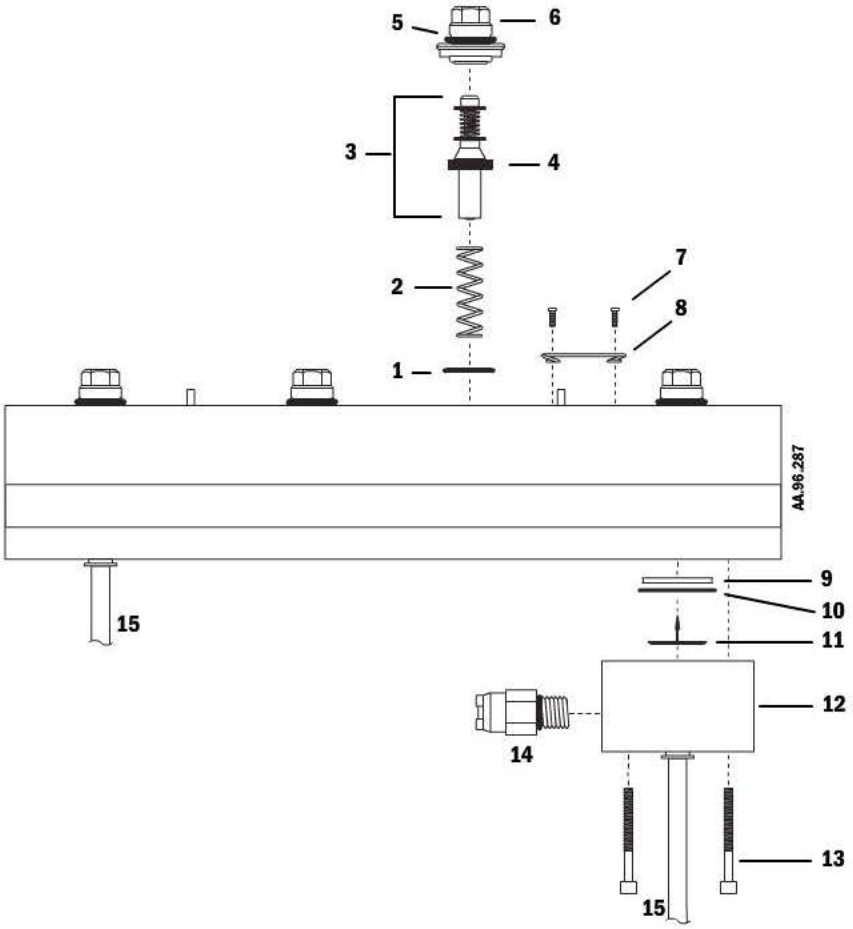

Item	Description	Stock Number
	Manifold assembly, complete, two position	1006-8355-000
	Manifold assembly, complete, one position	1009-8065-000
1	O-ring, 0.687 inch ID 0.812 inch OD	0210-0544-300
2	Spring, compression	1006-3736-000
3	Valve kit, includes seal	1006-8373-000
4	Seal	1006-3690-000
5	O-ring, 14.3 mm ID	1102-3043-000
	(Package of 6 o-rings)	1102-3016-000
6	Nipple, vaporizer port (New Style)	1006-4215-000
7	Screw, M2.5 - 0.45x6 PAN, Pozidriv, SST	1006-3037-000
8	Spring, Dzus	1102-3056-000
9	Seat, check valve	1006-1352-000
10	O-ring 27.1 OD 21.89 mm ID	1006-3866-000
11	Flapper	0211-1451-100
12	Housing assembly	1009-8477-000
13	Screw, M4 x 30, cap head	9211-0640-304
14	Valve, relief, 5.5 psi, 7/16-20 THD	1006-4128-000
15	Flexible tubing, 1/4 inch, mixed gas	1001-3064-000

10.16 Flowmeter components

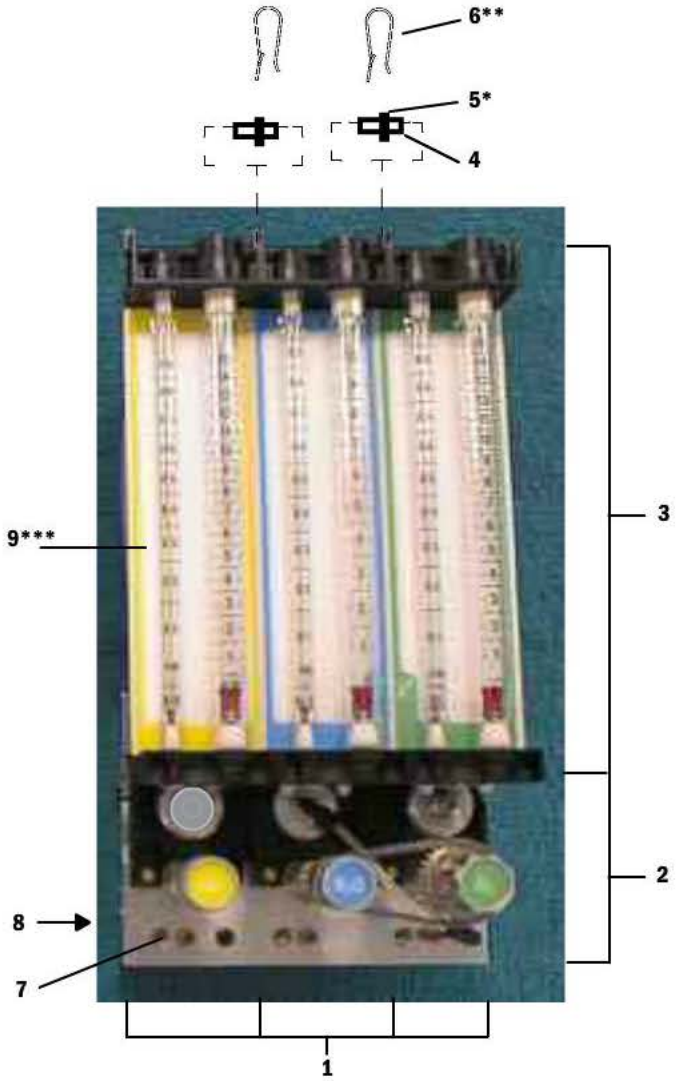

Single-tube Flowhead Outlet

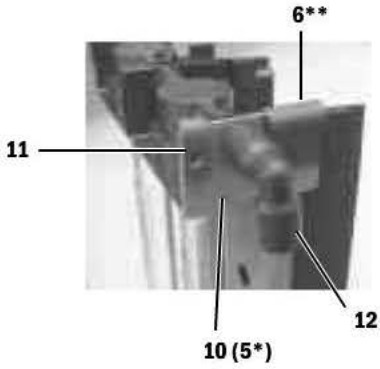

Item	Description	Stock Number
1	**Flowhead Module:** includes regulator (O_2 and N_2O), flowtube module, flowtubes, needle valve, intermodule tube and associated o-ring, and label plate; does not include labels, link-25, or knobs (order separately).	----------
	O_2 flowhead module with dual flowtubes	1006-8380-000
	O_2 flowhead module with single flowtube	1009-8069-000
	N_2O flowhead module with dual flowtubes	1006-8381-000
	N_2O flowhead module with single flowtube	1009-8070-000
	Air flowhead module with dual flowtubes (manifold without regulator)	1009-8405-000
	Air flowhead module with single flowtube (manifold without regulator)	1009-8404-000
2	Secondary regulators/Balance Regulators	----------
	Regulator Kit, O_2 (adjustable), without pressure switch	1006-8341-000
	Regulator Kit, N_2O (pressure balancing)	1006-8344-000
	Needle Valve Manifold Kit, Air (without regulator)	1006-8322-000

Item	Description	Stock Number
3	**Flowtube Module:** includes housing, o-rings, and plug ball; does not include, flowtubes, label or label panel (order separately).	----------
	Flowtube module, O_2 - dual	1006-8338-000
	Flowtube module, O_2 - single	1009-8234-000
	Flowtube module, N_2O - dual	1006-8337-000
	Flowtube module, N_2O - single	1009-8235-000
	Flowtube module, Air - dual	1006-8333-000
	Flowtube module, Air - single	1006-8334-000
4	Tube, intermodule connector	1006-3628-000
5*	O-ring, intermodule connector	1006-3613-000
6**	Clip, U-type self retaining	1006-4350-000
7	Screw, M5x30 (module mounting)	1102-3049-000
8	Screw, M5x55 (O_2/N_2O/3rd gas module connect)	1006-3607-000
	Screw, M5x110 (O_2 - Air module connect)	1006-3080-000
	Washer, M5 (O_2 - Air module connect)	1006-1459-000
	Nut, M5 Keps (O_2 - Air module connect)	0144-3717-324
9***	Flowmeter labels	refer to chart below
	Label panel, flowmeter module	1006-1290-000
	Side panel, (O_2 - Air flowmeter module)	1009-3186-000
	Screw, label panel	1006-3608-000
10	Adapter, single-tube outlet	1009-3056-000
11	Clip, small	1009-3309-000
12	Elbow, 1/4 inch	1202-3804-000
13	Bezel, flowmeter 3-gas	1009-3104-000
14	Bezel, flowmeter 2-gas	1009-3108-000

* Lubricate sparingly with Krytox.

** Note orientation of item 6; with flowmeter facing forward, the barbs should face to the left.

*** Position the label on the panel so that the right edge of the label is flush with the right edge of the panel. The left edge of the label will extend slightly beyond the left edge of the panel. When mounted in the flowmeter module, the flowmeter label on the right should slightly overlap the flowmeter label directly to its left.

**** The O_2 label set contains a label for both the dual-tube **(A)** and single-tube (**B**) modules. Make sure to install the correct label.

Chart: Flowmeter Labels (include knob labels)

	Stock Number	Stock Number	Stock Number
ANSI	**Air (Yellow)**	**N_2O (Blue)**	**O_2 (Green)**
	1006-0209-000	1009-3209-000	1009-3210-000
ISO	**O_2 (Neutral)**	**N_2O (Blue)**	**Air (Black/White)**
	1009-3211-000	1009-3209-000	1009-3242-000
Neutral	**O_2 (Neutral)**	**N_2O (Neutral)**	**Air (Neutral)**
	1009-3211-000	1009-3240-000	1009-3240-000

10.16.1 Flowtube parts

Item	Description	Stock Number
1	**Large flowtube kits** (includes float, filter, o-rings, tube)	----------
	Flowtube kit, Air, large	1006-8325-000
	Flowtube kit, N_2O, large	1006-8329-000
	Flowtube kit, O_2, large	1006-8331-000
2	**Small flowtube kits** (includes float, filter, o-rings, tube)	----------
	Flowtube kit, Air, small	1006-8326-000
	Flowtube kit, N_2O, small	1006-8330-000
	Flowtube kit, O_2, small	1006-8332-000
3	**Single-tube flowtube kits** (includes float, filter, o-rings, tube)	----------
	Flowtube kit, single-tube Air flowmeters use the Large flowtube kits	
	Flowtube kit, N_2O, single-tube, dual-taper with filter	1009-8199-000
	Flowtube kit, O_2, single-tube, dual-taper with filter	1009-8198-000
4	Spring, top of flowtubes	1006-3624-000
5	Float stop, O_2 large	1006-1225-000
	Float stop, N_2O large	1006-1226-000
	Float stop, Air large	1006-1227-000
6	O-ring, 17.6 OD, 12.37 ID, large flowtube, top	1006-3615-000
7	Filter, large flowtube	1006-3584-000
8	O-ring, 17.6 OD, 12.37 ID, large flowtube, bottom (red)	1006-3968-000
9	Float stop, O_2 small	1006-1233-000
	Float stop, N_2O small	1006-1234-000
	Float stop, Air small	1006-1235-000
10	O-ring, 11.26 OD, 6.02 ID, small flowtube, top	1006-3617-000
11	Filter, small flowtube	1006-3583-000
12	O-ring, 11.26 OD, 6.02 ID, small flowtube, bottom (red)	1006-3969-000
13	Ball, 6 mm (plug fresh gas end)	1006-1353-000
Not Shown:		
	O-ring Kit, flowtubes (includes 4 each of top and bottom o-rings for large flowtube and 3 each of top and bottom o-rings for small flowtube).	1006-8393-000
	Silicon tube kit, long, including cable ties	1006-8378-000
	Silicon tube kit, short, including cable ties	1006-8379-000

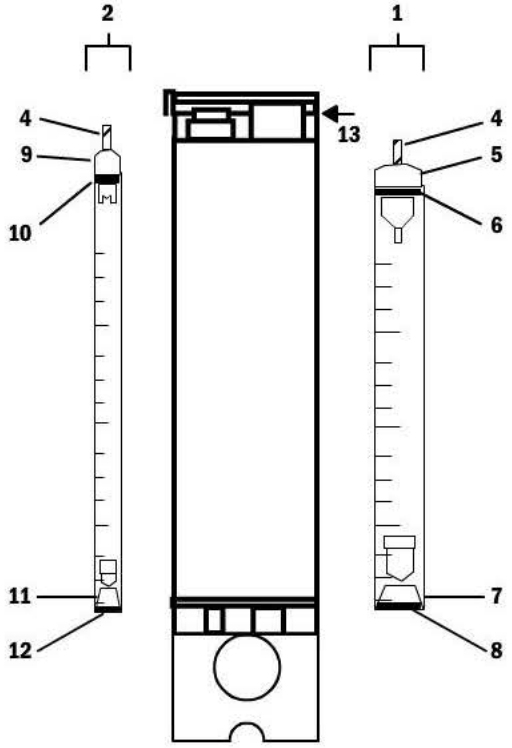
2
1
4
9
10
11
12
13
4
5
6
7
8

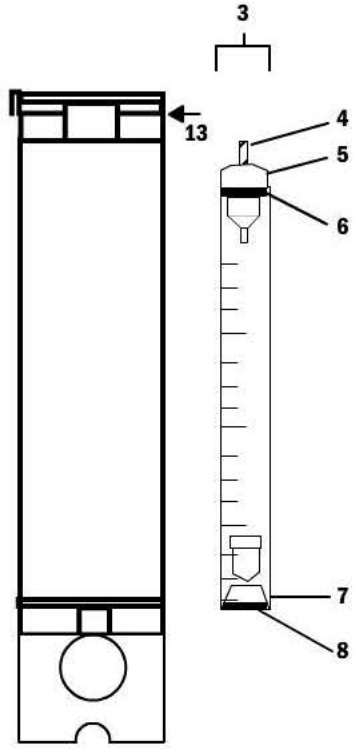
3
13
4
5
6
7
8

10.16.2 Secondary regulator components

Item	Description	Stock Number
1	Knob (N_2O) (Air) without label	1006-3633-000
2	O_2 Proportioning assembly (includes knob, sprocket, set screws, without knob label)	1006-8339-000
3	Set screw	0141-4227-105
4	O_2 Proportioner chain	1006-3610-000
5	Sprocket, N_2O	1006-3625-000
6	Spacer, link system, N_2O needle valve	1006-5140-000
7	Valve, needle (O_2) (Air)	1006-8346-000
	Valve, needle N_2O (has notch around valve body)	1006-8345-000
8	O-ring, 10.1 ID 13.3 OD	9221-3010-116
9	O-ring, 0.250 inch ID 0.375 inch OD	0210-0687-300
10	Minimum stop collar (all gases)	1006-3632-000
11	Pressure switch, O_2 supply alarm	1006-3623-000
12	O-ring, 0.250 inch ID 0.375 inch OD	0210-0687-300
13	Screws, M4x12 Pozidriv PAN	0140-6226-111
14	Plug, pressure switch cavity	1006-3665-000
15	Screws, M4x8 Pozidriv PAN	1006-3178-000
16	Fitting, O_2 pilot, plug-in elbow	1006-3533-000
17	Fitting, O_2 pilot, thread-in elbow	1006-3663-000
18	Tubing, 4-mm (RH head 144 mm - LH head 164 mm)	1001-3060-000

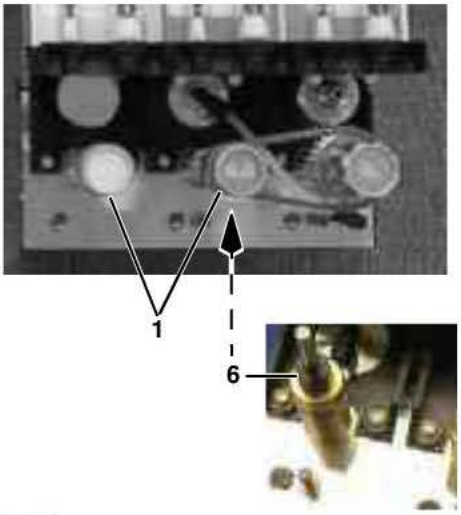
1
6

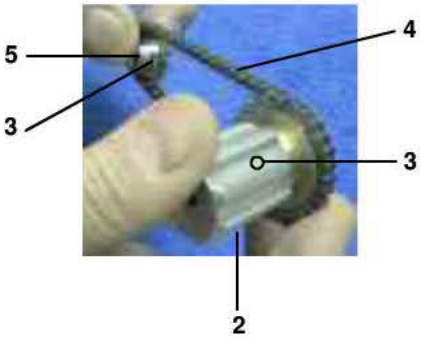
5
4
3
3
2

7
8
9

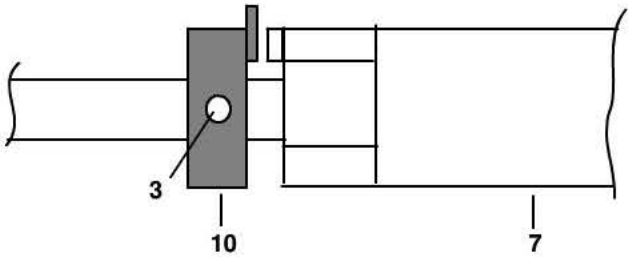
3
10
7

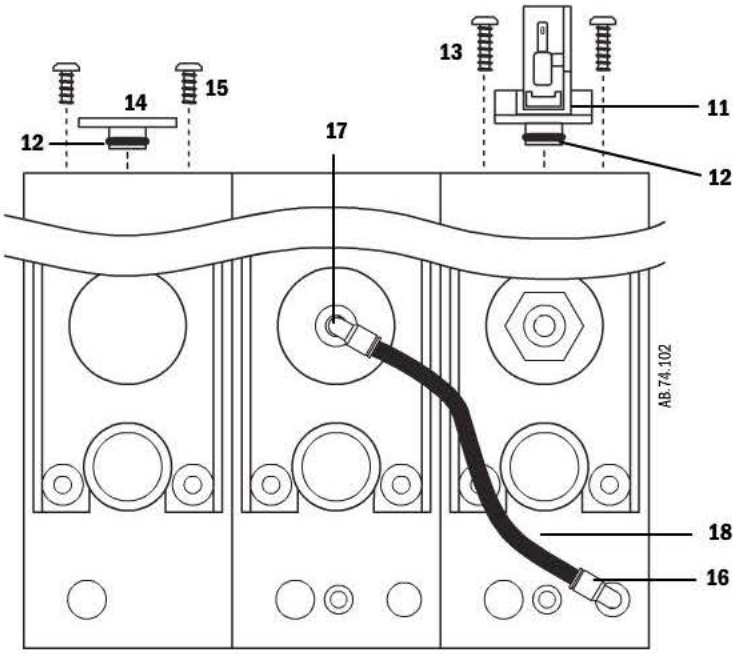
13
15
14
11
12
17
12
AB.74.102
18
16

10.17 ABS to machine Interface Components

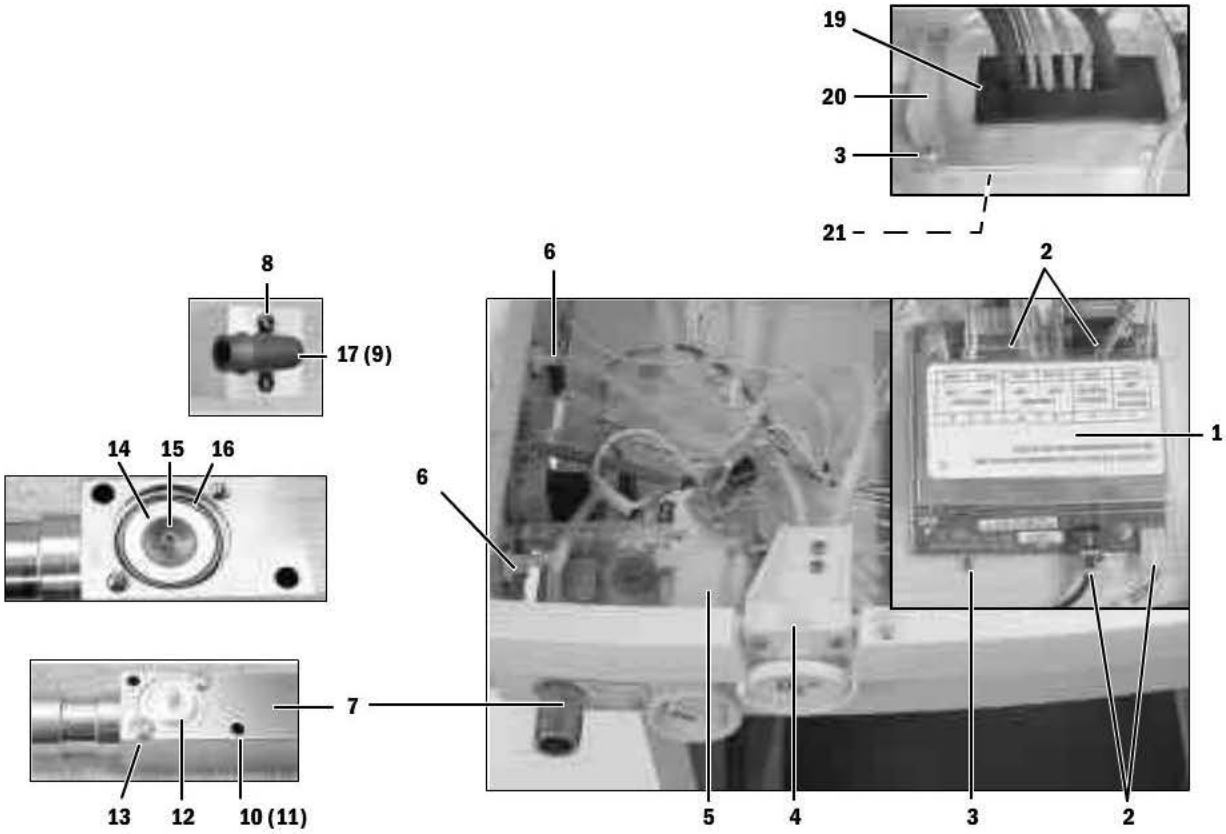

Item	Description	Stock Number
1	Enhanced Sensor Interface board (ESIB)	1503-7014-000
2	Cables and harnesses	Refer to section 10.27
3	Screw, M4x8 POZI-DR PAN SST TYPE 316	1006-3178-000
4	O_2 Flush Valve	Refer to section 10.17.1
5	ACGO Selector Valve	Refer to section 10.17.1
6	Tie wrap	0203-5915-300
7	Port, ACGO body	1009-3096-000
8	Screw, M3x6	9211-1030-055
10	Screw, M4x30	9211-0640-304
11	Lockwasher, M4	9213-0540-003
12	Cap, ACGO check valve	1009-3095-000
13	Screw, M4x8	9211-1040-069
14	Disk, ACGO check valve	1009-3062-000
15	Flapper, ACGO check valve	1009-3097-000
16*	O-ring	0210-0543-300
17	Fitting, elbow barbed	1009-3160-000
18*	O-ring	0210-0691-300
19	Cable raceway	1009-3442-000
20	Plate, cable raceway	1009-3417-000
21	Gasket, cable raceway plate (self adhesive)	1009-3418-000

* Lubricate sparingly with Krytox.

10.17.1 Flush Valve and ACGO Selector Switch

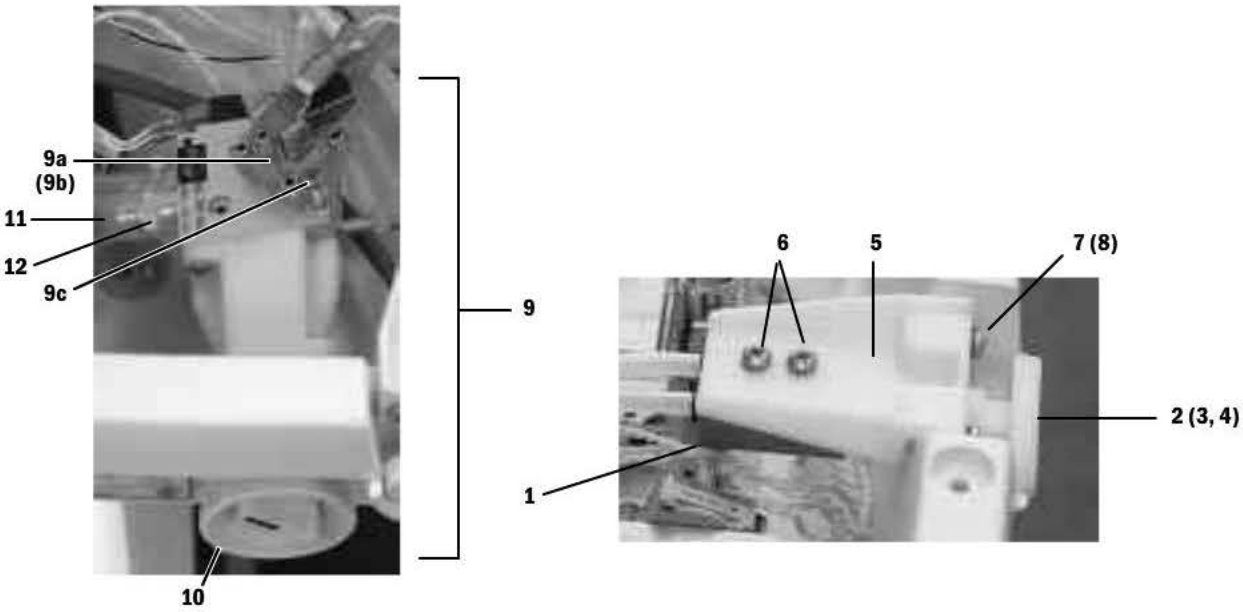

Item		Description	Stock Number
1		Flush valve, without button	1006-8357-000
2		Flush Button with rod	1011-3354-000
3		Spring	1006-3186-000
4		E-clip	0203-5225-300
5		Bracket	1011-3355-000
6		Screw, M4x8	1006-3178-000
7		Screw, M4x12	0140-6226-111
8		Lockwasher, M4	9213-0540-003
9		ACGO Selector Switch, complete for machines without a Flush Regulator (without guard - item 10)	1009-3411-000
	9a	Flush pressure switch	1006-3972-000
	9b	O-ring	1006-3213-000
	9c	Screws	0144-2124-201
10		Guard	1009-3140-000
11		Tubing, silicone	1009-3164-000
12		Tie wrap	0203-5915-300

10.18 Breathing system interface

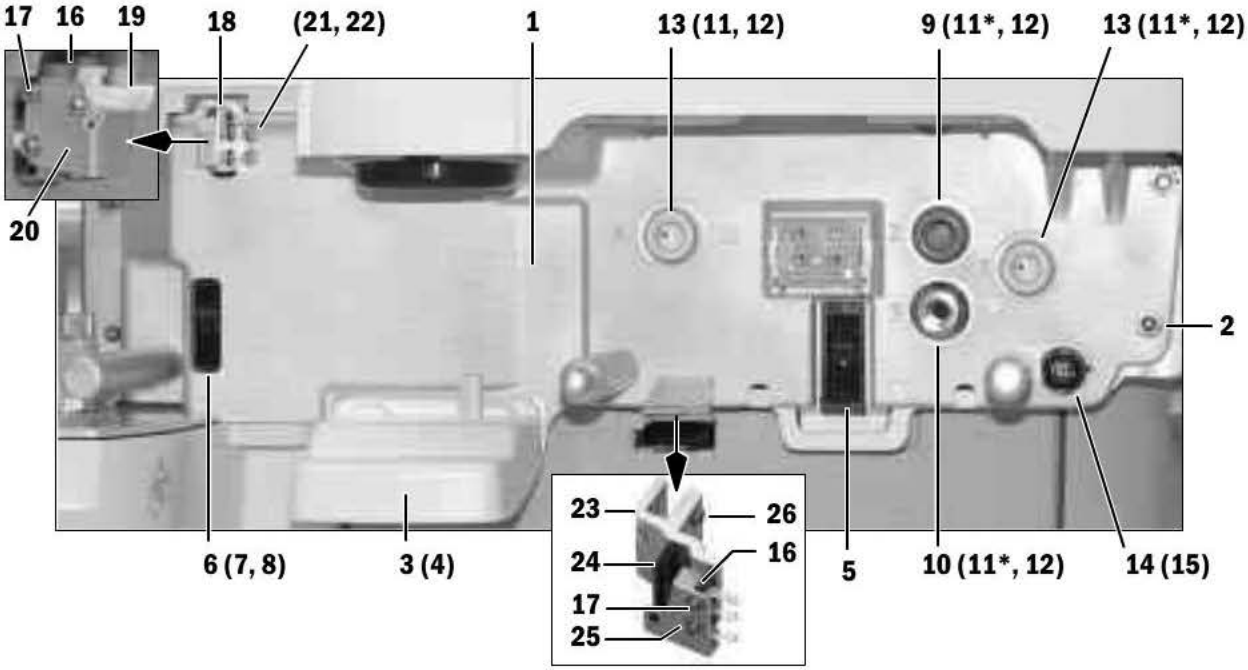

Item	Description	Stock Number	Qty
1	Assembly, main support casting	1407-7010-000	
2	Bolt, M6x16 flange	1009-3125-000	(5)
3	Handle, grip	1407-3317-000	
4	Screw, M6X16 Sems	0144-2436-109	(2)
5	Latch, push to close	1407-3309-000	
6	Latch, push to close w/microswitch	1407-3310-000	
7	Screw, SKT HD CAP M3x8 SST	1006-3865-000	(2)
8	Washer, lock external M3	9213-0530-003	(2)
9	Port, plug circuit	1407-3333-000	
10	Port, fresh gas	1407-3314-000	
11*	Seal,U-Cup 12.7 ID BCG 19.05 OD EPR	1407-3320-000	(4)
12	Ring, retaining 15.88 SHAFT DIA TYPE E SST	1406-3446-000	(4)
13	Port, sample gas	1407-3318-000	(2)
14	Connector, bulkhead O2 Cell, with harness	1009-5586-000	
15	Ring, retaining 9.53 SHAFT DIA TYPE E SST	1406-3277-000	
16	Switch, subminiture w/QDISC terminals	1406-3296-000	(2)
17	Screw, M2.5 x10	1009-3153-000	(4)
18	Bracket, BTV switch	1407-3319-000	
19	Lever, BTV switch	1407-3325-000	
20	Bracket, cap BTV	1407-3324-000	
21	Screw, SKT HD CAP M3x8 SST	1006-3865-000	(2)
22	Washer, lock external M3	9213-0530-003	(2)
23	Bracket, bypass switch	1407-3139-000	
24	Paddle, switch actuator	1407-3141-000	
25	Bracket, paddle hinge	1407-3140-000	
26	Screw, M6x6 set cup	1007-3329-000	(2)

* Lubricate sparingly with Krytox.

10.19 Breathing System

10.19.1 APL Valve

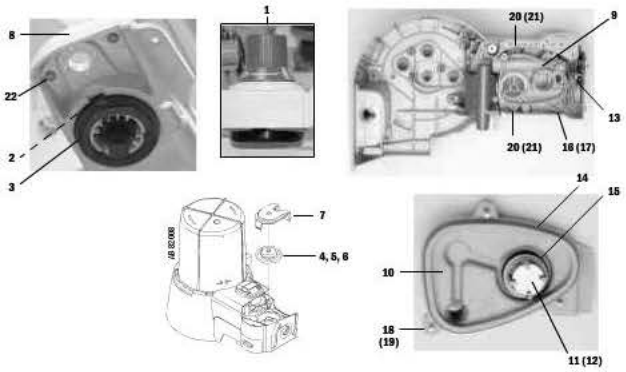

Item	Description	Stock Number	QTY
1	APL Valve Assy (includes items 2 through 6)	1009-8200-000	
2	SPRING CPRSN 53.14 OD 36.8 L 1.48 N/MM	1406-3328-000	
3	RETAINER SPRING APL	1407-3404-000	
4	DIAPHRAGM APL	1406-3331-000	
5	CAGE APL	1406-3333-000	
6	POPPET APL VALVE	1406-3332-000	
7	RAMP APL	1407-3400-000	
8	COVER APL	1407-3405-000	
9	MANIFOLD APL/BTV	1407-3401-000	
10	Cover, Manifold APL/BTV (with 22-mm male bag port)	1407-3402-000	
	Cover, Manifold APL/BTV (with Australian bag port - 22 mm female)	1407-3412-000	
10	COVER MANIFOLD APL/BTV	1407-3402-000	
11	WEIGHT DEAD 14CM H2O BCG ABS NEG RELIEF	1407-3406-000	
12	SEAL ABS NEG RELIEF VLV	1407-3407-000	
13	O-RING 22 ID 30 OD 4 W SI 40 DURO	1407-3104-000	
14	O-RING 88.49 ID 95.55 OD 3.53 W SILICONE 50 DURO	1407-3403-000	
15	O-RING 1.049ID 1.2550D 0.103W EPDM NO 121	1407-3408-000	
16	SCR M4X16 BT SKT HD SST TYPE 316	0140-6226-115	(2)
17	Lockwasher, M4 external	9213-0540-003	(2)
18	SCR THUMB M4 SHLDR 7.5 X 7	1407-3410-000	(3)
19	RING RETAINING 3.96 SFT DIA CRESCENT SST	1407-3411-000	(3)
20	SCR M4 X 40 FL HD SST PH	0140-6226-122	(2)
21	O-RING 2.9 ID 6.46 OD 1.78 W EP 70 DURO	1407-3409-000	(2)
22	SCR SEMS M4X8 BT SKT HD W/EXT L/W SST 316	0144-2436-108	(3)

10.19.2 Bag/Vent Switch

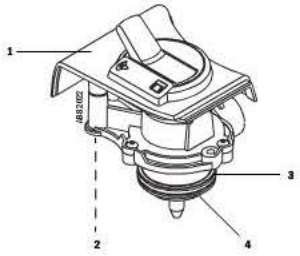

Item	Description	Stock Number	QTY
	BTV Switch Cartridge	1407-7003-000	
1	COVER BTV	1407-3500-000	
2	SCR SEMS M4X8 BT SKT HD W/EXT L/W SST 316	0144-2436-108	(2)
3	O-RING 44.02 ID 51.1 OD 3.53 W SI 70 DURO	1407-3507-000	
4	SEAL, BTV	1407-3506-000	

10.19.3 Absorber canister

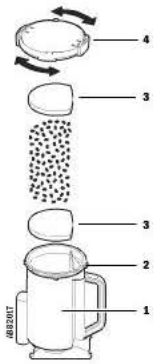

Item	Description	Stock Number
	Absorber Canister, Reusable	1407-7004-000
1	Canister, CO_2	1407-3200-000
2	O-RING 110.72 ID 117.78 OD 3.53 W EPR 50 DURO	1407-3204-000
3	Foam, CO_2 Canister (PKG 40)	1407-3201-000
4	Cover assembly, CO_2 canister	1009-8240-000

10.19.4 Flow Sensor Module

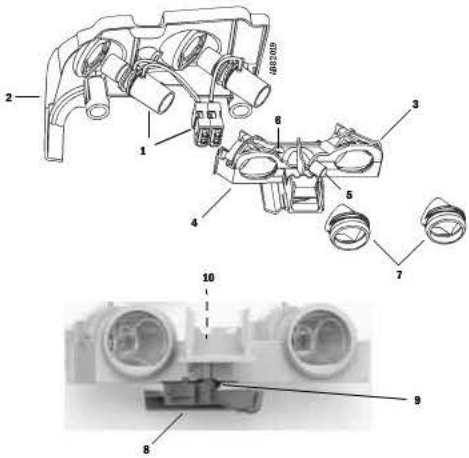

Item	Description	Stock Number	Qty
	Flow Sensor Module (does not include Item 1)	1407-7001-000	
1	Flow Sensor (plastic) Flow Sensor (metal - autoclavable)	1503-3856-000 1503-3244-000	
2	COVER FLOW SNSR	1407-3000-000	
3	HOLDER FLOW SNSR UPPER	1407-3002-000	
4	HOLDER FLOW SNSR LOWER	1407-3003-000	
5	SCR THUMB M6X43 SST	1406-3304-000	
6	SCR M4 X 10 SKT CAP BUTTON HEAD SST	0144-2117-718	(2)
7	CUFF FLOW SNSR	1407-3004-000	(2)
8	LATCH FLOW SNSR	1407-3001-000	
9	SPR TORSION FLOW SNSR LATCH	1407-3005-000	
10	RING TRUARC 0.188 SHAFT E-RING SST	0203-5225-300	

10.19.5 Breathing Circuit Module

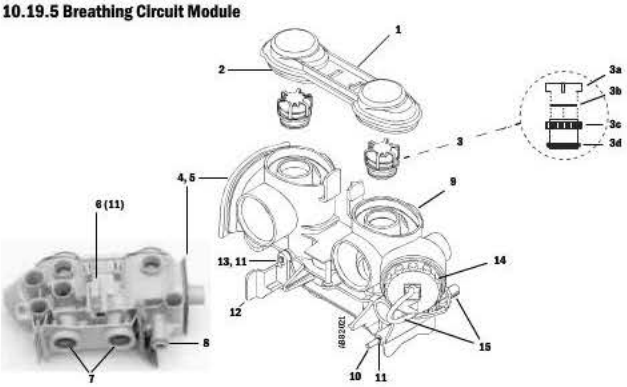

Item	Description	Stock Number	Qty
	Breathing Circuit Module (*)	1407-7002-000	
1	LENS CIRCUIT CHK VALVES	1407-3101-000	
2	O-RING 44.02 ID 51.1 OD 3.53 W SI 70 DURO	1407-3507-000	(2)
3	Check Valve Assembly	1406-8219-000	(2)
3a	RETAINER DISK 26.97D 12.7H 0.76T	1400-3017-000	(2)
3b	DISC CHK V RVSBL 1.025D	0210-5297-100	(2)
3c	SEAT UNIDIRECTIONAL V B/S	1406-3396-000	(2)
3d	O-RING 20.35 ID 23.90 OD 1.78W	1406-3397-000	(2)
4	PLATE CIRCUIT FLANGE	1407-3110-000	
5	SCR SEMS M4X8 BT SKT HD W/EXT L/W SST 316	0144-2436-108	(6)
6	HOOK LATCH	1407-3604-000	
7**	O-RING, 22 ID 30 OD 4 W SI 40 DURO	1407-3104-000	(2)
8**	O-RING, 12.37 ID 17.6 OD	1006-3968-000	
9	MANIFOLD CIRCUIT	1407-3100-000	
10	PIN CANISTER PIVOT	1407-3109-000	
11	RING TRUARC 0.188 SHAFT NO 5133-18H E-RING SST	0203-5225-300	(5)
12	LEVER CANISTER LATCH	1407-3102-000	
13	PIN CANISTER LEVER	1407-3108-000	
14*	O_2 Cell (includes o-ring)	6050-0004-110	
	O-ring, cell	1406-3466-000	
15*	Cable, O_2 Cell	1009-5570-000	

* The O_2 cell (or plug) and the cell cable are not included in the breathing circuit module.

** Lubricate sparingly with Krytox.

10.19.6 Exhalation valve

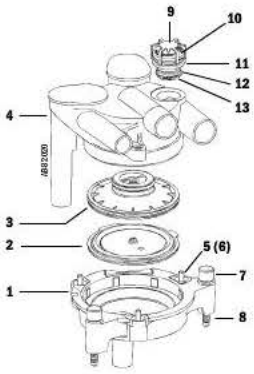

Item	Description	Stock Number	Qty
	Exhalation Valve Assy	1407-7005-000	
1	BASE EXHALATION VALVE	1407-3700-000	
2	DIAPHRAGM ASSY EXH VALVE	1503-8121-000	
3	SEAT EXHALATION VLV ABS	1407-3704-000	
4	COVER EXHALATION VALVE	1407-3701-000	
5	SCR M4X16 PH PAN HD SST TYPE 316	9211-0440-163	(3)
6	O-RING 2.9 ID 6.46 OD 1.78 W EP 70 DURO	1407-3409-000	(3)
7	SCR THUMB M6X43 10MM HEAD B/S	1406-3306-000	(2)
8	O-RING 4.47 ID X 8.03 OD 1.78 W EPR 70 DURO	1407-3703-000	(2)
9	RETAINER DISK 26.97D 12.7H 0.76T SST FLUTTER V	1400-3017-000	
10	WEIGHT DEAD 10 CMH2O BCG PASSIVE AGSS	1406-3572-000	
11	SEAT POSITIVE PRESS BCG VALVE PASSIVE AGSS	1406-3571-000	
12*	O-RING OD19.16 BCG ID15.6 EPDM DURO 70 -016	1006-3616-000	
13	RING RETAINING 19.05 SHAFT DIA SST	1406-3577-000	

* Lubricate sparingly with Krytox.

10.19.7 Bellows

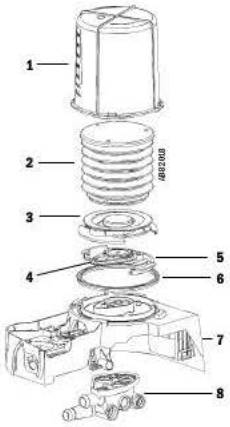

Item	Description	Stock Number
1	Bellows housing	1500-3117-000
2	Bellows	1500-3378-000
3	Rim	1500-3351-000
4	Pressure relief valve assy	1500-3377-000
5	Latch, base	1500-3352-000
6	Seal, base	1500-3359-000
7	Base, bellows	Refer to section 10.19.8
8	Manifold, bellows base	1407-3702-000

10.19.8 Bellow base

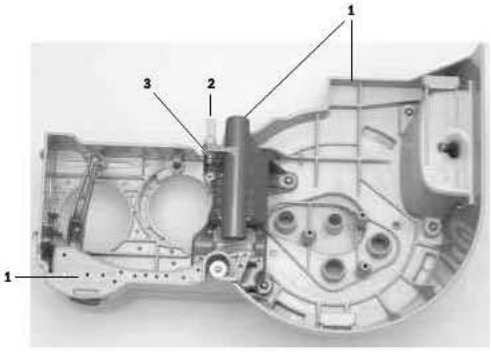

Item	Description	Stock Number
1	Bellows Base Assy	1407-7006-000
1a	Latch Assy	1407-7007-000
2	HOOK LATCH	1407-3604-000
3	E-Ring	0203-5225-300

10.19.9 Bag Arms

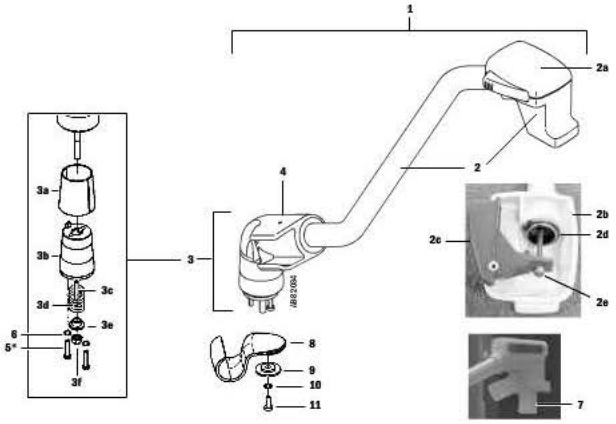

Item		Description	Stock Number	Qty
1		Bag Arm Assembly (complete)	1009-8159-000	
2		Bag Arm Upper Assembly	1407-7011-000	
	2a	Cover, bag port housing	1407-3807-000	
		Screw, M3x20	0140-6719-103	
		Lockwasher, M3 internal	9213-0430-003	
	2b	Housing, bag port	1407-3806-000	
	2c	Lever, lock release	1407-3808-000	
	2d	Ring, retaining	1406-3577-000	
	2e	Nut, M3 Nyloc	0144-3536-112	
3		Bag Arm Lower Assembly	1407-7012-000	
	3a	Pad, Friction Material	1407-3818-000	
	3b	Post	1407-3802-000	
	3c	Pin, spirol	9214-2103-020	
	3d	Spring	1406-3270-000	
	3e	Washer, shoulder	1407-3815-000	
	3f	Nut, M5 Nyloc	9212-0350-006	
4		Pin, dowel 3.18 DIA 31.8 L SST	1407-3804-000	
5		Screw, M3x16 POSI DR PAN HD A4 SST	1504-3003-000	(2)
6		Lockwasher, M3 internal	9213-0430-003	(2)
7		Bag arm connector, reusable	8004459	
Items If no Bag Arm				
8		Clip, patient tubing	1407-3810-000	
9		Washer, shoulder	1407-3814-000	
10		Lockwasher, M4 external	9213-0540-003	
11		Screw, M4x16	9211-0440-163	

* Apply Loctite 242.

10.20 Electrical enclosure (lower) parts

Item	Description	Stock Number
1	PCB, CPU (integrated), Service (without EPROMS)	1006-8285-000
2	EPROM Kit, U14 and U23, Aespire 7900	Refer to section 10.1.1
3	Battery pack	1503-3045-000
3a	Fuse, battery, 4A 5x20 time delay	1503-3074-000
4	Power supply, Service	1006-4258-000
5	Harness, line filter to power supply	1009-6125-000
6	Harness, power supply to CPU	1006-4261-000
7	Ribbon cable, CPU to DB15 and DB9	1006-4260-000
8	Harness, from CPU to task light harness	1009-6076-000
9	Support plate, with seal (Service Kit)	1009-8459-000
10	Standoff, #4-40 DSUB	1202-3092-000
11	Lockwasher	0144-1104-331
12	Grommet, horseshoe	1406-3203-000
13	Cables	Refer to section 10.27

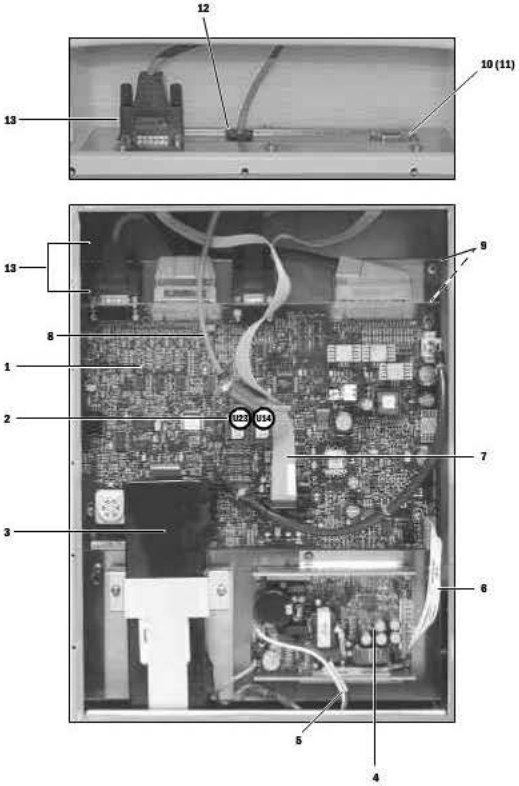
12
10 (11)
13
13
9
8
1
2
U23
U14
7
3
6
5
4

10.21 Display Module

10.21.1 Rear housing parts

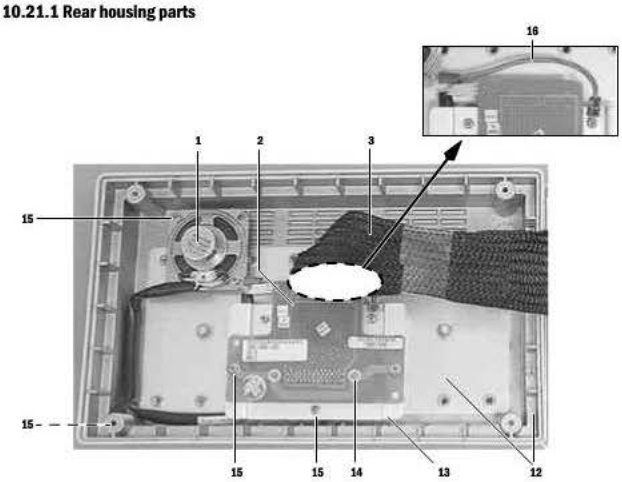

Item	Description	Stock Number
1	Speaker assembly, with leads	1503-3106-000
2	Connector board	1006-3682-000
3	Harness, connector board to front panel board (50 pin)	1503-3052-000
12	Rear housing, vent control display	1006-1242-000
13	Bracket, connector board mount	1006-1322-000
14	Screw, 2-56 x 5/16 PAN PH HD SST, rear panel DB connector (2)	0140-6110-105
15	Screw, M3 x 8 Sems (11)	0140-6219-130
16	Ground wire	1009-3453-000

10.21.2 Front housing parts

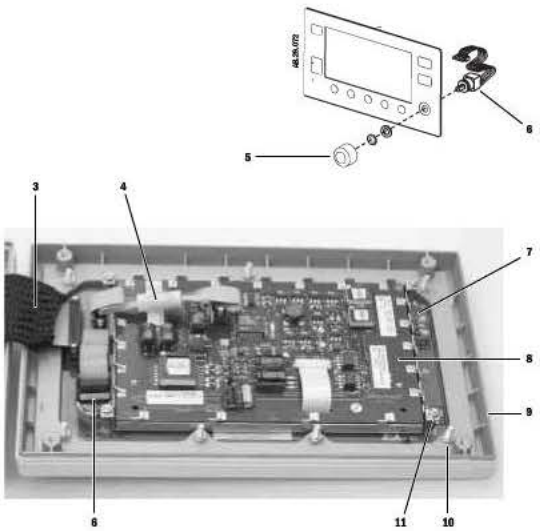

Item	Description	Stock Number
3	Harness, connector board to front panel board (50 pin)	1503-3052-000
4	Harness, display-keyboard with ferrite (20 pin)	1605-3072-000
5	Knob, soft touch, teal green	1006-4622-000
6	Rotary encoder, with cable and mounting hardware	1503-3012-000
7	Keyboard, front panel vent control display	1006-1325-000
8	EL display	1503-8010-000
9	Front housing, vent control display	1006-1241-000
10	Nut, Keps M4, keyboard/display mount (7)	0144-3717-314
11	Nut, Keps M3, display mount (4)	0144-3717-302

10.22 Vent Engine Housing

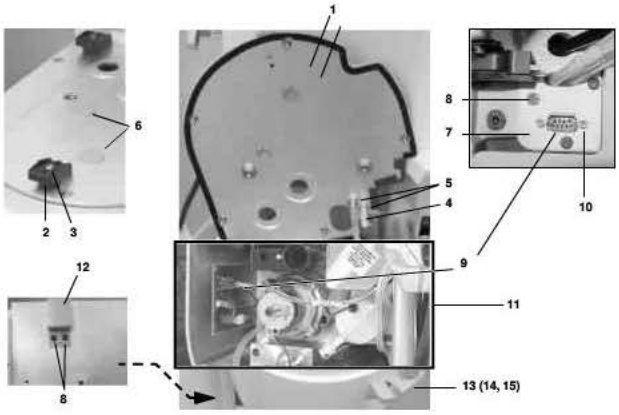

Item	Description	Stock Number	Qty
1	Vent Engine Cover Plate Assy	1407-7009-000	
2	TAB GUIDE BELLOWS BASE	1407-3313-000	(2)
3	SCR M3X16 POSI DR PAN HD A4 SST	1504-3003-000	(2)
4	Cap, Plug	1406-3524-000	
5	FITTING PNL MOUNT 3.18 HOSE BARB UNION	1504-3014-000	(2)
6	PLUG HOLE 15.9 DIA NYLON MICRO PLASTICS	1006-1473-000	
7	PLATE CONN VENT	1407-3321-000	
8	SCR M4X8 POZI-DR DIN84 PAN SERRATED	1006-3178-000	(5)
9	Harness, Vent Engine Board to Connector Plate	1009-6077-000	
10	Vent Engine	Refer to section 10.23	
11	Standoff, Screwlock #4-40	1202-3092-000	(2)
12	Bracket, scavenging guard in machines without scavenging	1407-3922-000	
13	CLIP-SUCTION BAG HOSE	1407-3327-000	
14	SCR M5 X 16 PAN PH HD SST	9211-8350-163	(2)
15	Lockwasher	0144-1118-220	(2)

10.23 Vent Engine

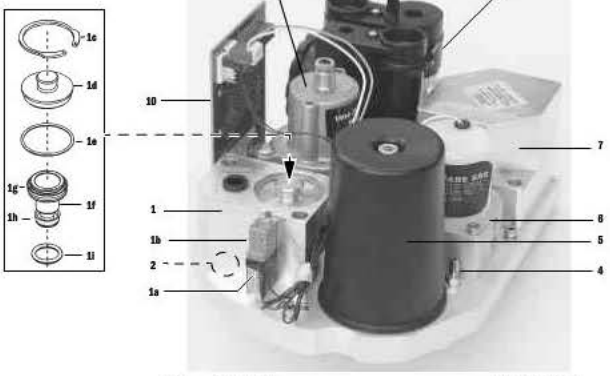

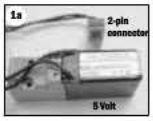

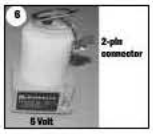

Item	Description	Stock Number
	Vent Engine Assembly, Service (Aespire 7900)	1009-8423-000
1	Gas Inlet Valve (GIV) components	Refer to section 9.24.3
1a	Solenoid, 3-way NO (5 Volt)	1503-3088-000
1b	Screw, M1.6x14	1006-4730-000
1c	Retaining ring, 34.9 mm	1500-3158-000
1d	Cap, inlet valve	1503-5006-000
1e	O-ring, upper Viton	9221-3032-116
1f	Shuttle, inlet valve	1503-5018-000
1g	U-cup, upper EDPM (fits on shuttle valve)	1503-3090-000
1h	U-cup, lower Viton (fits on shuttle valve)	1503-3089-000
1i	O-ring, lower Viton	1503-3108-000
2	Filter (under GIV), 2-micron (install course side DOWN)	1504-3708-000
4	Fitting, manifold pressure	1500-3116-000
5	Reservoir, pneumatic engine	1504-3704-000
	O-ring, base, 56.87 ID x 60.43 OD	1504-3614-000
	O-ring, screw head, 0.219 ID x 0.344 OD	0210-0686-300
	Screw, M6x90	1504-3004-000
6	Flow control valve - 5 Volt	1503-3218-000
	O-ring under flow control valve (2 each)	1503-3056-000
7	Drive gas check valve	1503-3006-000
	O-ring under drive gas check	1503-3213-000
8	Interface Manifold	Refer to section 10.23.1
9	Regulator, 172 kPa BCG	1504-3623-000
10	Vent Engine Connector board (not part of assembly)	1009-6126-000

10.23.1 Vent Engine - under side

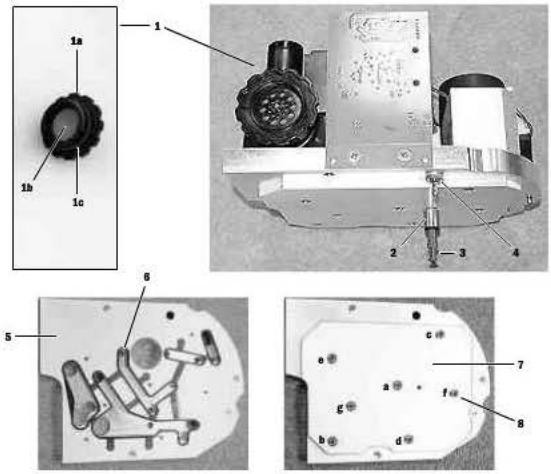

Item	Description	Stock Number
1	Interface Manifold, pneumatic engine (with free breathing valve and mechanical overpressure valve)	1504-8505-000
	O-ring, 12.42 ID x 15.98 OD (2)	1006-3615-000
1a	Seat, free breathing valve	1503-3204-000
1b*	Valve, flapper	0211-1454-100
1c	O-ring	1503-3208-000
2	Fitting, 6.35-mm (1/4-inch)	1504-3621-000
3	Plug, 6.35-mm (1/4-inch)	1503-3245-000
4	Fitting, barbed	1504-3014-000
5	Manifold	1503-3843-000
6**	Gasket, manifold	1503-3845-000
7	Plate, manifold	1503-3844-000
8***	Screw, M4x8 Pozidriv PAN	1006-3178-000

* If necessary, clean with alcohol before installing new; trim off flush with outside surface of seat (refer to removed flapper).

** Install gasket into manifold. Check to see that it is properly positioned.

*** Carefully install plate onto manifold making sure not to disturb the gasket.
First, start all screws. Then, torque to 1.7 N-m (15 lb-in) using sequence shown.

10.24 Legris quick-release fittings

	Item	Description	Stock Number
	1	**Tees – (tube/tube/tube)**	
		4 mm (N_2O)	1202-3653-000
		6 mm (O_2)	1006-3544-000
		8 mm (Air)	1006-3545-000
		8 mm/6 mm/8 mm (SCGO pilot)	1009-3297-000
	2	**Tees – (tube/tube/standpipe)**	
		6 mm (O_2)	1006-3862-000
		8 mm (Air - Drive gas)	1009-3370-000
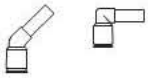	3	**Elbow – (tube/standpipe)**	
		4 mm (N_2O)	1006-3533-000
		6 mm (O_2)	1006-3534-000
		8 mm (Air)	1006-3535-000
		1/4 inch (mixed gas)	1006-3737-000
		1/4 inch (45° - mixed gas)	1009-3368-000
	4	**Elbow – (tube/tube)**	
		1/4 inch (mixed gas)	1202-3804-000
	5	**Y**	
		6 mm (O_2)	1009-3043-000
		8 mm (Air)	1009-3044-000
		8 mm Y with tailpiece	1009-3360-000
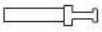	6	**Plug**	
		4 mm (N_2O)	1006-3530-000
		6 mm (O_2)	1006-3531-000
		8 mm (Air)	1006-3532-000

Note: Not every fitting is used in all machines.

10.25 Vent Drive and low-pressure tubing

Item	Description		Length – Size	Stock Number
1	Coupler, female - black			1503-3128-000
2	Coupler, male - black			1503-3237-000
3	Coupler, female - white			1503-3119-000
4	Coupler, male - white			1503-3236-000
5	Coupler, female - yellow			1503-3132-000
6	Coupler, male - yellow			1407-3330-000
7	Tee (male barb)			1009-3011-000
8	Cap, plug			1406-3524-000
9	Fitting, coupler barb ends			1009-3077-000
10	Plug, 4-mm			1006-3530-000
11	Tubing (silicone)		72 mm - 3/8 inch	1009-3164-000
12	Tubing (silicone)		42 mm - 3/8 inch	1009-3164-000
	Tube Markings (factory build only)		**Length – Size**	
125	VENT DRIVE	(black)	900 mm - 8 mm	1009-3296-000
120	Aux O2 OUT	(low-pressure)	250 mm - 1/4 inch	1605-1001-000
127	RGM return	(low-pressure)	750 mm - 1/4 inch	1605-1001-000
128	unmarked	(low-pressure)	300 mm - 1/4 inch	1605-1001-000
129	unmarked	(low-pressure)	151 mm - 1/4 inch	1605-1001-000
130	AGSS flowtube	(low-pressure)	750 mm - 1/4 inch	1605-1001-000
132	PAW	(low-pressure)	260 mm - 1/4 inch	1605-1001-000
134	unmarked	(low-pressure)	25 mm - 1/4 inch	1605-1001-000
135	unmarked	(low-pressure)	50 mm - 1/4 inch	1605-1001-000
136	RGM to Scavenge	(low-pressure)	200 mm - 1/4 inch	1605-1001-000
137	RGM to Circuit	(low-pressure)	300 mm - 1/4 inch	1605-1001-000
144	Venturi Pilot	(black)	330 mm - 4 mm	1009-3363-000
145	Venturi Drive	(black)	300 mm - 8 mm	1009-3296-000
146	unmarked	Tygon	260 mm - 1/2 inch	6700-0005-300
148	unmarked	Tygon	465 mm - 1/2 inch	6700-0005-300
149	unmarked		40 mm - 8 mm	1001-3063-000
150	unmarked	Tygon	180 mm - 1/2 inch	6700-0005-300
151	PAW	(low-pressure)	930 mm - 1/4 inch	1605-1001-000
230	MANIFOLD PRESS	(low-pressure)	30 mm - 1/4 inch	1605-1001-000

*Refer to section 10.26

** Sample gas return is directed to the scavenging system as a factory default. A qualified service representative can reroute the sample gas back to the breathing system (refer to Section 9.12).

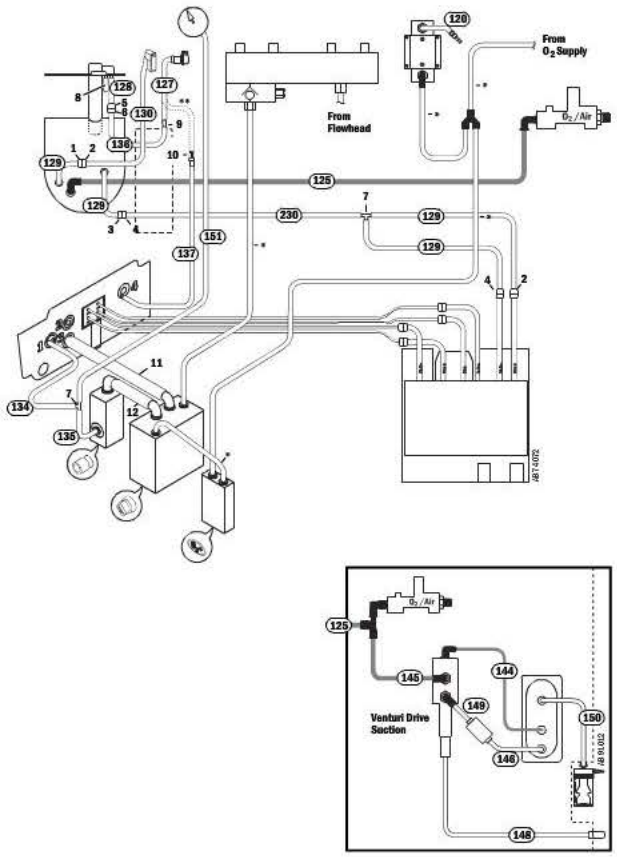
From
O_2 Supply
From
Flowhead
O_2 / Air
120
125
127
128
129
130
134
135
136
137
151
230
1
2
3
4
5
6
7
8
9
10
11
12
J8 14 002

O_2 / Air
125
144
145
146
148
149
150
Venturi Drive
Section
J8 90 002

10.26 Tubing for use with Legris fittings

Except for the Tygon tubing (Items 147 and 150), this tubing is a flexible, Nylon-type tubing for use with quick-release fittings.

Item	Description	Length – Size	Stock Number
106*	N2O PLINE - N2O FLWMOD	1200 mm - 4 mm	1001-3060-000
107*	N2O PLINE - N2O CYL	430 mm - 4 mm	1001-3060-000
108*	UNMARKED	40 mm - 4 mm	1001-3060-000
109*	N2O CYL - N2O FLWMOD	800 mm - 4 mm	1001-3060-000
113	SW4-O2 FLWMOD	1350 mm - 6 mm	1001-3062-000
115	REGULATED O2	600 mm - 6 mm	1001-3062-000
116	REGULATED O2	250 mm - 6 mm	1001-3062-000
118	O2 PLINE - O2 SW3	270 mm - 6 mm	1001-3062-000
123**	unmarked	175 mm - 6 mm	1001-3062-000
219	O2 CYL - O2 PLINE	215 mm - 6 mm	1001-3062-000
111	AIR PLINE - AIR SW3	460 mm - 8 mm	1001-3063-000
110	SW4-AIR FLWMOD	1350 mm - 8 mm	1001-3063-000
112	AIR CYL- AIR PLINE	270 mm - 8 mm	1001-3063-000
100	AIR PLINE - AIR GAGE	470 mm - 1/8 inch	1006-3718-000
101	N2O PLINE - N2O GAGE	470 mm - 1/8 inch	1006-3718-000
102	O2 PLINE - O2 GAGE	470 mm - 1/8 inch	1006-3718-000
104	VAP OUT- ACGO	840 mm - 1/4 inch	1001-3064-000
105	FLWMOD-VAP IN	840 mm - 1/4 inch	1001-3064-000
103	FLUSH VLV-ACGO	280 mm - 1/4 inch	1001-3064-000
147	unmarked (Tygon)	290 mm - 1/2 inch	6700-0005-300
150	unmarked (Tygon)	180 mm - 1/2 inch	6700-0005-300

* With an inboard N_2O cylinder supply, Item 106 is replaced with Item 107 and 109 joined with a tee fitting. The output of the N_2O cylinder is routed to the the tee fitting with Item 108.

** With two inboard O_2 cylinder supplies, Item 123 connects the second O_2 cylinder supply to the first O_2 cylinder supply.

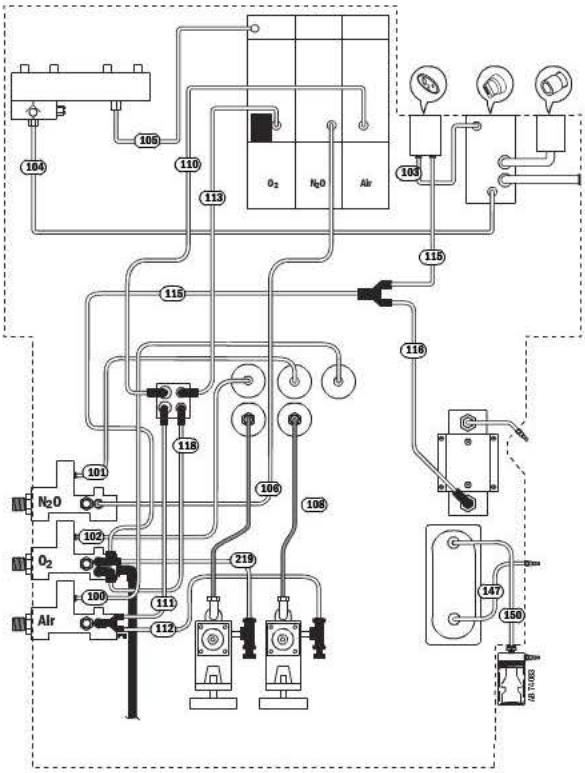
O2
N2O
Air
105
104
110
113
103
115
115
116
118
101
N2O
106
108
102
O2
219
100
111
Air
112
147
150
AB 7108B

10.27 Cables and harnesses

Item	Description	Stock Number
1	Cable, CPU Board to 7900 Vent display	1006-3701-000
2	Cable, CPU Board to machine switches	1009-6070-000
3	Cable, CPU Board to ESIB	1006-3700-000
4	Cable, CPU Board to Vent Engine connector plate	1006-3706-000
5	Cable, ESIB to ABS switches/flow sensors (includes tubing)	1009-8458-000
6	Harness, O_2 Cell harness to ESIB	1009-6075-000
7	Harness, ACGO switch to ESIB	1009-6078-000
8	Harness, O_2 Cell to ESIB harness	1009-5586-000
9	Harness, Bag/Vent - ABS On switches	1009-6074-000
10	Harness, Vent Engine Board to Connector Plate	1009-6077-000
11	Harness, to System switch (On/Standby)	1009-5542-000
12	Power Cord	Refer to section 10.11
13	Harness, 100/120 V to Toroid Harness, 220/240 V to Toroid	1009-5752-000 1009-5753-000
14	Harness, Line Filter to Power Power Supply	1009-6125-000
15	Harness, to 100/120 V outlets Harness, to 220/240 V outlets	1009-5716-000 1009-5717-000
16	Harness, Task Light	1009-5584-000
17	Harness, CPU Board to Task Light harness	1009-6076-000
18	Ribbon Cable, CPU Board to DB25 and DB9	1006-4260-000
19	Harness, Power Supply to CPU Board	1006-4261-000
20	Cable, Serial, CPU Board to side panel	1009-6072-000
21	Harness, CO_2 Bypass switch	1407-3144-000

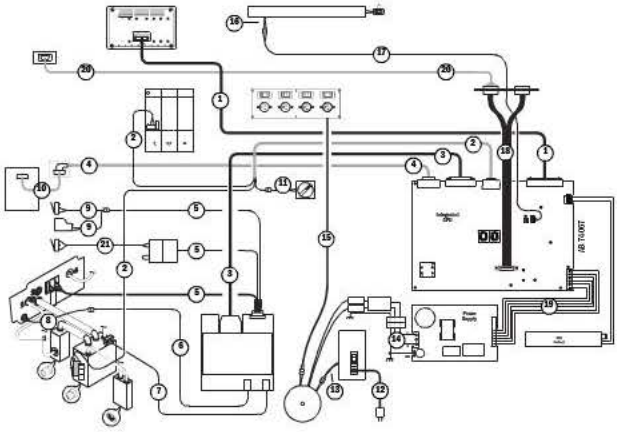
AB T-UNIT

10.28 Anesthetic Gas Scavenging System — AGSS

10.28.1 Passive AGSS

Items 1 through 12 are included in all AGSS kits.

Item	Description, Common Parts	Stock Number	Qty
1	Seal, Receiver Body	1407-3901-000	
2	Reservoir	1407-3903-000	
3	Seal and scavenging down-tube	1407-3904-000	
4	Thumbscrew, M6x28.5	1406-3305-000	
5	O-ring, 4.42 ID, 9.65 OD	1407-3923-000	(2)
6	Thumbscrew, M6x43	1406-3304-000	
7	Valve, unidirectional (negative pressure relief)	1406-8219-000	
7a	Seat, Valve, Negative Pressure	1406-3396-000	
7b	Retainer, disc	1400-3017-000	
*7c	O-ring, 20.35 ID, 23.90 OD	1406-3397-000	
7d	Disc, check-valve	0210-5297-100	
8*	O-ring, 22 ID, 30 OD silicone	1407-3104-000	(2)
9*	O-ring, 21.95 ID, 25.51 OD	1406-3558-000	
10	Screw, M4x8	9211-0640-083	(2)
11	Cap, 3.18 Barb, Silicone	1406-3524-000	
12	Adapter, auxiliary inlet, 30-mm male to 30-mm male	M1003134	
13	Adapter, auxiliary inlet, 30-mm male to 19-mm male	M1003947	
Passive AGSS Specific Parts			
14	Receiver, Passive/Adjustable	1407-3908-000	
15	Plug Assembly, tethered	1407-3909-000	(2)
16	Screw, shoulder M3	1407-3915-000	
17	Connector, 30-mm ISO, Male	1406-3555-000	
18	Adapter, scavenging, 30-mm female to 19-mm male	1500-3376-000	(5 pack)

* Lubricate sparingly with Krytox

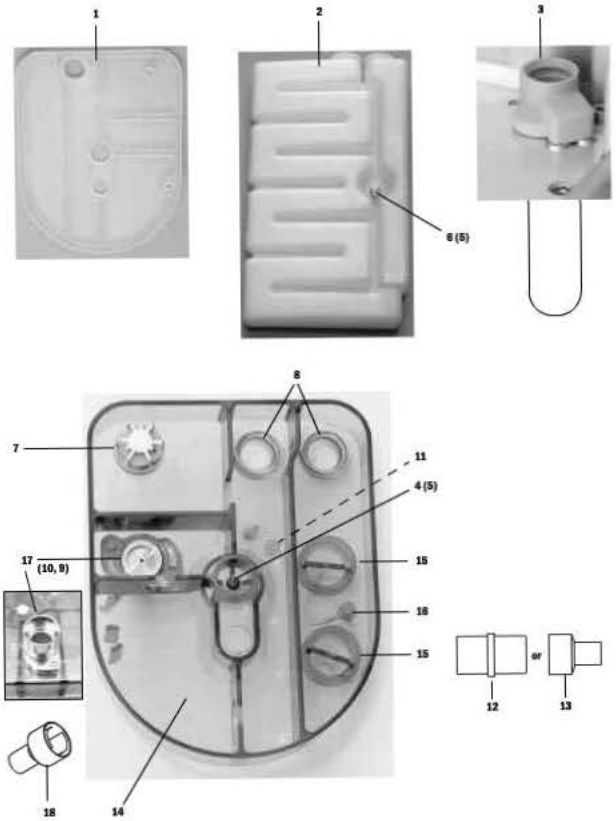
1
2
3
6 (5)
8
7
11
4 (5)
17
(10, 9)
15
16
15
or
12
13
18
14

10.28.2 Adjustable AGSS

Items 1 through 12 are included in all AGSS kits.

Item	Description, Common Parts	Stock Number	Qty
1	Seal, Receiver Body	1407-3901-000	
2	Reservoir	1407-3903-000	
3	Seal and scavenging down-tube	1407-3904-000	
4	Thumbscrew, M6x28.5	1406-3305-000	
5	O-ring, 4.42 ID, 9.65 OD	1407-3923-000	(2)
6	Thumbscrew, M6x43	1406-3304-000	
7	Valve, unidirectional (negative pressure relief)	1406-8219-000	
7a	Seat, Valve, Negative Pressure	1406-3396-000	
7b	Retainer, disc	1400-3017-000	
*7c	O-ring, 20.35 ID, 23.90 OD	1406-3397-000	
7d	Disc, check-valve	0210-5297-100	
8*	O-ring, 22 ID, 30 OD silicone	1407-3104-000	(2)
9*	O-ring, 21.95 ID, 25.51 OD	1406-3558-000	
10	Screw, M4x8	9211-0640-083	(2)
11	Cap, 3.18 Barb, Silicone	1406-3524-000	
12	Adapter, auxiliary inlet, 30-mm male to 30-mm male	M1003134	
13	Adapter, auxiliary inlet, 30-mm male to 19-mm male	M1003947	
Adjustable AGSS Specific Parts			
14	Receiver, Passive/Adjustable	1407-3908-000	
15	Plug Assembly, tethered	1407-3909-000	
16	Screw, shoulder M3	1407-3915-000	
17	Needle Valve Assembly (with DISS EVAC connector)	1407-3918-000	
18	Bag with 30 mm male connector	8004460	

* Lubricate sparingly with Krytox

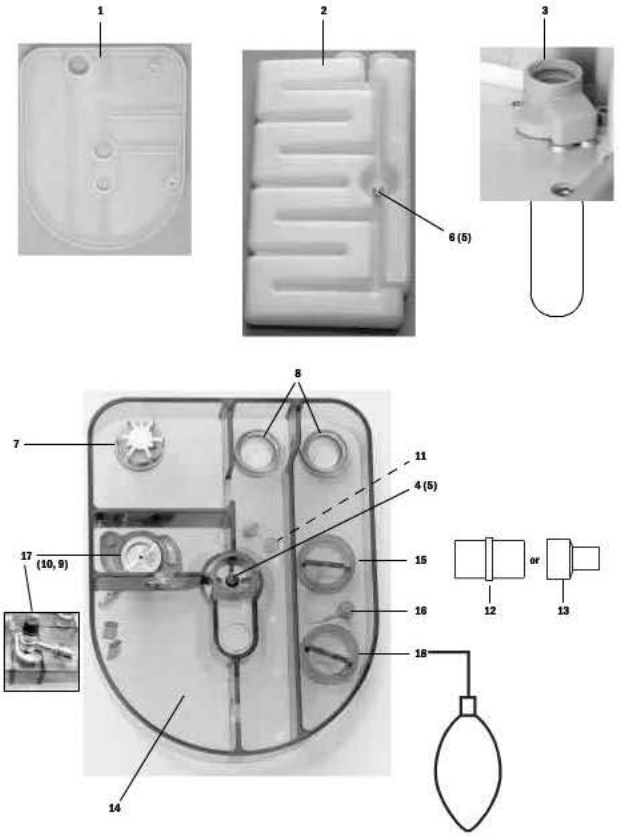
1
2
3
6 (5)
8
7
11
4 (5)
17
(10, 9)
15
or
16
12
13
18
14

10.28.3 Active AGSS

Items 1 through 12 are included in all AGSS kits.

Item	Description, Common Parts	Stock Number	Qty
1	Seal, Receiver Body	1407-3901-000	
2	Reservoir	1407-3903-000	
3	Seal and scavenging down-tube	1407-3904-000	
4	Thumbscrew, M6x28.5	1406-3305-000	
5	O-ring, 4.42 ID, 9.65 OD	1407-3923-000	(2)
6	Thumbscrew, M6x43	1406-3304-000	
7	Valve, unidirectional (negative pressure relief)	1406-8219-000	
7a	Seat, Valve, Negative Pressure	1406-3396-000	
7b	Retainer, disc	1400-3017-000	
*7c	O-ring, 20.35 ID, 23.90 OD	1406-3397-000	
7d	Disc, check-valve	0210-5297-100	
8*	O-ring, 22 ID, 30 OD silicone	1407-3104-000	(2)
9*	O-ring, 21.95 ID, 25.51 OD	1406-3558-000	
10	Screw, M4x8	9211-0640-083	(2)
11	Cap, 3.18 Barb, Silicone	1406-3524-000	
12	Adapter, auxiliary inlet, 30-mm male to 30-mm male	M1003134	
13	Adapter, auxiliary inlet, 30-mm male to 19-mm male	M1003947	
Active AGSS Specific Parts			
14	Receiver, with air brake	1407-3900-000	
15	Seal, for filter and orifice	1407-3902-000	(2)
16	Filter	1406-3521-000	
Active High Flow Specific Parts			
17a	Connector, high flow M30 thread	1406-3557-000	
18	Orifice, high flow	1407-3920-000	
Active Low Flow with EVAC connector Specific Parts			
17b	Connector, low flow EVAC	1406-3597-000	
18	Orifice, low flow	1407-3919-000	
Active Low Flow with 25 mm connector Specific Parts			
17c	Connector, low flow 25 mm	1406-3573-000	
18	Orifice, low flow	1407-3919-000	
Active Low Flow with 12.7 mm hose barb connector Specific Parts			
17d	Connector, low flow 12.7 mm (1/2 inch)	1406-3574-000	
18	-none-		
Active Low Flow with 30 mm ISO male connector Specific Parts			
17e	Connector, low flow 25 mm	1406-3555-000	
18	Orifice, low flow	1407-3919-000	

* Lubricate sparingly with Krytox

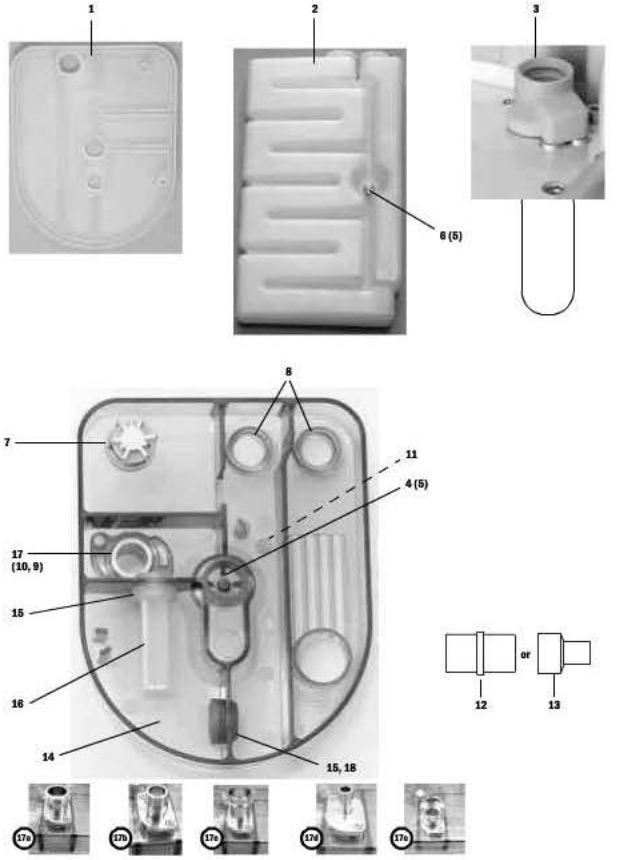
1
2
3
6 (5)
8
7
11
4 (5)
17
(10, 9)
15
16
14
15, 18
or
12
13
17a
17b
17c
17d
17e

10.29 Integrated Suction Regulator

10.29.1 Major Components (Continuous and Venturi suction)

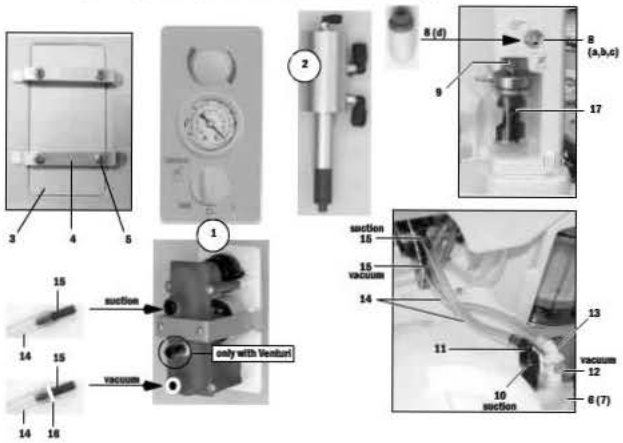

Item	Description	Stock Number
1	Suction Control Module	Refer to section 10.29.2
2	Venturi Assembly	Refer to section 10.29.3
3	Cover, blank (if no Suction)	1009-3271-000
4	Bracket, blank cover mounting	1009-3270-000
5	Screw, M4x10 self-tapping	1009-5534-000
6	Manifold	1009-3123-000
7	Screw, M5x20 BHSCS PT THD FORMING	1009-3384-000
8a	Connector, NIST	1011-3524-000
8b	Connector, Barb	0221-0702-300
8c	Connector, Air Liquide	1009-8292-000
8d	Muffler, for Venturi Drive	1011-3511-000
9	Coupling, Colder insert metal	1009-3135-000
10	Coupling, Colder body black	1009-3373-000
11	Coupling, Colder insert black	1009-3374-000
12	Coupling, Colder body white	1009-3371-000
13	Coupling, Colder insert white	1009-3372-000
14	Tubing, Tygon	Refer to section 10.26
15	Fitting, barb to 8-mm Legris	1009-3137-000
16	Cap, white	1009-3385-000
17	Overflow Safety Trap	6700-0647-000

10.29.2 Suction Control Module

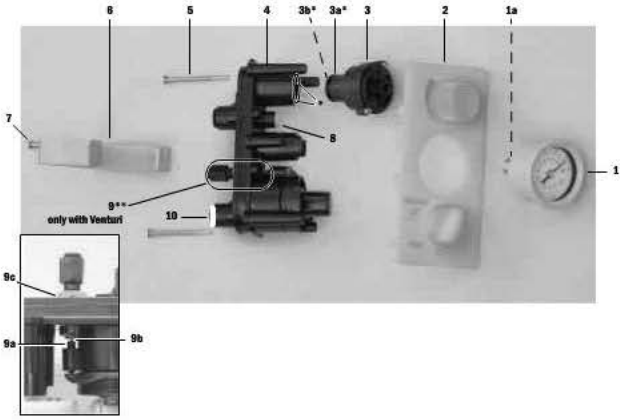

Item	Description	Stock Number
1	Gauge, 760 mmHg	1009-3227-000
	Gauge, 1 Bar	1009-3228-000
1a	O-ring, Gauge (included with gauge assy, 2ea. required)	6700-0133-500
2	Control panel assembly, with suction regulator knob and mode control knob	1009-3213-000
3	Regulator Module (plugs into manifold assembly)	6700-1225-800
3a	O-ring, Regulator Module, Large (included with regulator module)	6700-0136-500
3b	O-ring, Regulator Module, Stem (included with regulator module)	0210-0527-300
4	Manifold Assembly, without Gauge and Regulator Module	1009-3277-000
5	Screw, #6 - 2 inch	1009-3340-000
6	Mounting bracket	1009-3255-000
7	Screw, #6 - 1 inch	1009-3339-000
8	Filter	0206-5159-300
9	Pilot valve adapter assembly (includes plunger, jam nut, and valve assembly)	1009-3278-000
10	Cap, white	1009-3192-000

* Lubricate the regulator module o-rings and the mating bore of the manifold sparingly with Dow 111 lubricant.
** Drop the plunger (**9a**), round end first, into the manifold. Thread the pilot valve into the manifold body. Set the mode switch to raise the plunger. Adjust the pilot valve (**9b**) so that the plunger actuates the pilot valve approximately half of its travel. Tighten the jam nut (**9c**).

10.29.3 Venturi assembly

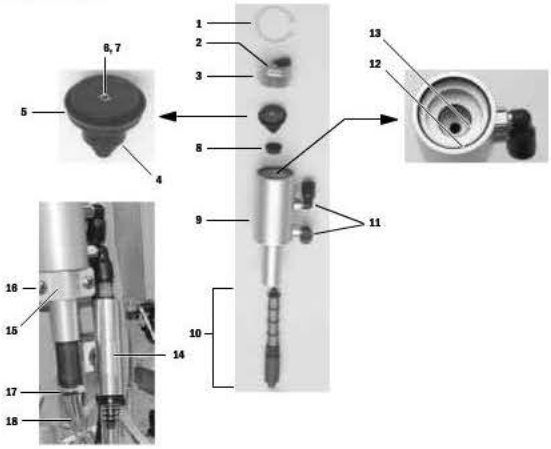

Item	Description	Stock Number
1	C-clip retainer, Truarc	1500-3158-000
2	Elbow fitting, 4-mm Legris	1006-3663-000
3	Cap	1011-5002-000
4	Spoppet	1011-5001-000
5	Seal, u-cup large	1503-3090-000
6	Orifice	1011-3508-000
7	Screen, 150 mesh monel	1001-3808-000
8	Seal, u-cup small	1503-3089-000
9	Body	1011-5000-000
10	Venturi	1011-3509-000
11	Elbow fitting, 8-mm Legris	1011-3510-000
12	O-ring, large	9221-3032-116
13	O-ring, small	1503-3108-000
14	Check valve	1011-8002-000
15	Bracket, Venturi mounting	1009-3182-000
16	Screw, M5x20 BHSCS PT THD FORMING	1009-3384-000
17	Cable tie	0203-5915-300
18	Tubing, Tygon	Refer to section 10.25

10.30 Auxiliary O_2 Flowmeter

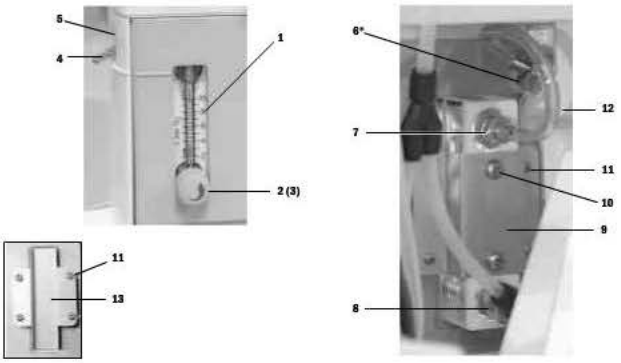

Item	Description	Stock Number
1	Flowmeter, 1-10 L/min, Complete with fittings installed Flowmeter, 1-10 L/min, without fittings	1006-8424-000 1006-3841-000
2	Knob, gray	1011-3471-000
3	Set Screw	9211-0830-053
4	Nipple, Panel-Mount, Auxiliary O_2 Outlet	1006-5177-000
5	Label, blank (if no Auxiliary O_2)	1009-3243-000
6*	Nut, M12x1.75, SST	0144-3132-140
7**	Flowmeter Fitting, 1/8 NPTM straight adapter Flowmeter Fitting, 1/8 NPTM elbow adapter	0204-8877-300 0204-8788-300
8**	Flowmeter Fitting Assembly, 6-mm Tubing Adapter	1006-8423-000
9	Plate, Flowmeter Mounting	1009-3126-000
10	Screw, 10-32 x 3/8	0140-6631-107
11	Screw, M4x10 self-tapping	1009-5534-000
12	Tubing (low-pressure) 250 mm - 1/4 inch	1605-1001-000
13	Plate, blank (if no Auxiliary O_2)	1009-3128-000

* Apply Loctite 242.
** Apply Teflon tape.

10.31 Serial and task light cable, AGSS flowtube, and sample return

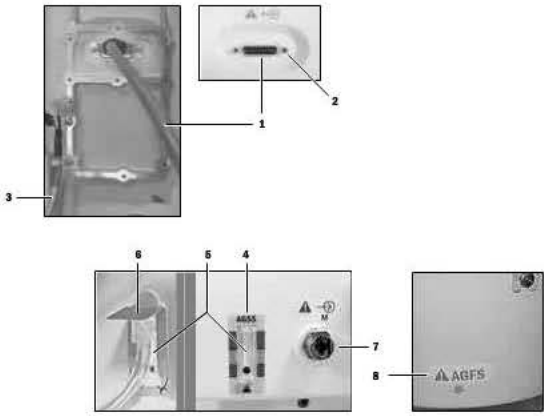

Item	Description	Stock Number
1	Cable, serial, Integrated CPU to side panel	1009-6072-000
2	Standoff	1202-3092-000
	Lockwasher	0144-1104-331
3	Harness, Integrated CPU to task light harness	1009-6076-000
4	Label, flow indicator AGSS	1406-3527-000
	Label, flow indicator AGFS (for German variant)	1009-3301-000
	Label, blank (for machines without flow indicator)	1009-3241-000
5	Flowtube, AGSS	1406-3560-000
6	Clip, AGSS flowtube	1009-3181-000
7	Coupling, Colder (Kit includes mounting nut)	1009-8321-000
	Label set, blank (for machines without scavenging)	1009-3351-000
8	Label, AGFS (for German variant)	1009-3300-000

10.32 Display mounts

10.32.1 Long arm

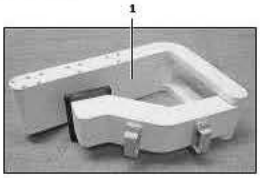

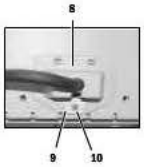

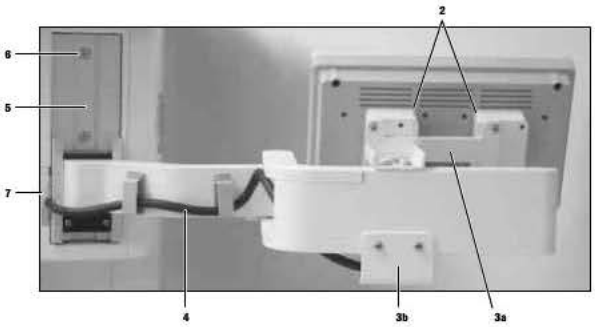

Item	Description	Stock Number
1	GCX Arm Kit, long	1009-3262-000
2	Spacer	1009-8419-000
3	GCX Bracket Kit includes display mount (3a), cable guard (3b), and mounting hardware	1009-3263-000
4	Cable, Integrated CPU to 7900 Display	1006-3701-000
5	Extrusion, upper dovetail	1009-3113-000
6	Screw, M6x20	0144-2131-925
7	Lable, blank	1009-3451-000
8	Cover	1006-1326-000
9	Washer, rectangular	1006-4287-000
10*	Screw, M3x8	9211-0430-083

* Apply Loctite 242

10.32.2 Folding mount

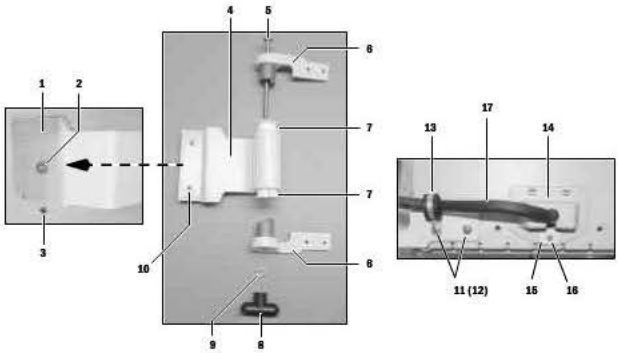

Item	Description	Stock Number
1	Dovetail insert	1009-3408-000
2*	Screw, M8x16 SKT HD	1009-3435-000
3*	Screw, M6x12 SKT HD	0144-2436-101
4	Extrusion, Vent bracket mount	1504-3514-000
5	Bolt, carriage	1006-1433-000
6	Casting, Vent Bracket, 20 degree (2)	1504-3526-000
7	Bearing, white plastic (2)	1006-3228-000
8	Handle, T-clamping	1301-3001-000
9	Washer, flat	9213-0180-006
10	Set screw, M6x10	1009-3436-000
11	Screw, M4x20	0144-2124-218
12	Lockwasher, M4	0144-1118-128
13	Clamp	1504-3527-000
14	Cover	1006-1326-000
15	Washer, rectangular	1006-4287-000
16*	Screw, M3x8	9211-0430-083
17	Cable, Integrated CPU to 7900 Display	1006-3701-000

* Apply Loctite 242

10.33 Cable management arm

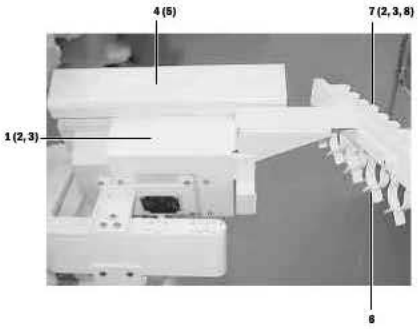

Item	Description	Stock Number
	Cable management arm, complete assembly	1009-8181-000
1	Bracket, cable management	1009-3261-000
2	Screw, M4x12	0140-6226-111
3	Lockwasher, M4 external	9213-0540-003
4	Extrusion, cable arm, front loading	1009-3247-000
5	Screw, M4x6 Nyloc	1009-3283-000
6	Retainer, multiple cable	1009-3252-000
7	Retainer, cable small	1009-3259-000
8	Washer, M4 flat	0144-1025-165

10.34 Display arm mounting kits for optional equipment

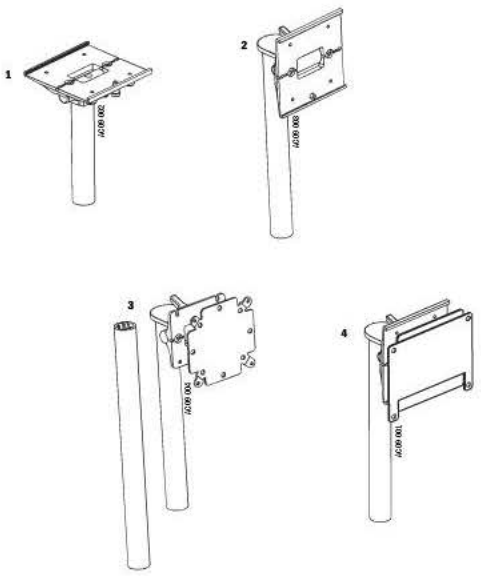

Item	Description	Stock Number
1	Cardiocap 5 mount	1009-3265-000
2	S/5 Flat Panel mount	1009-3266-000
3	Spacelabs Flat Panel mount	1009-3267-000
4	Spacelabs PC Scout mount	1009-3268-000

In this section

Schematics are subject to change without notice.

Circuit boards are available only as complete assemblies.

Figure 11-1 System connection block diagram 11-2

Figure 11-2 Gas scavenging circuits 11-3

Figure 11-3 Electrical cabling block diagram 11-4

Figure 11-4 Pneumatic circuit diagram 11-5

Figure 11-5 Wiring harnesses 11-6

Figure 11-6 Tubing 11-7

Figure 11-7 Schematic, AC Inlet module; 100–120 V (Isolated outlets 11-8

Figure 11-8 Schematic, AC Inlet module; 220–240 V (Isolated outlets) 11-9

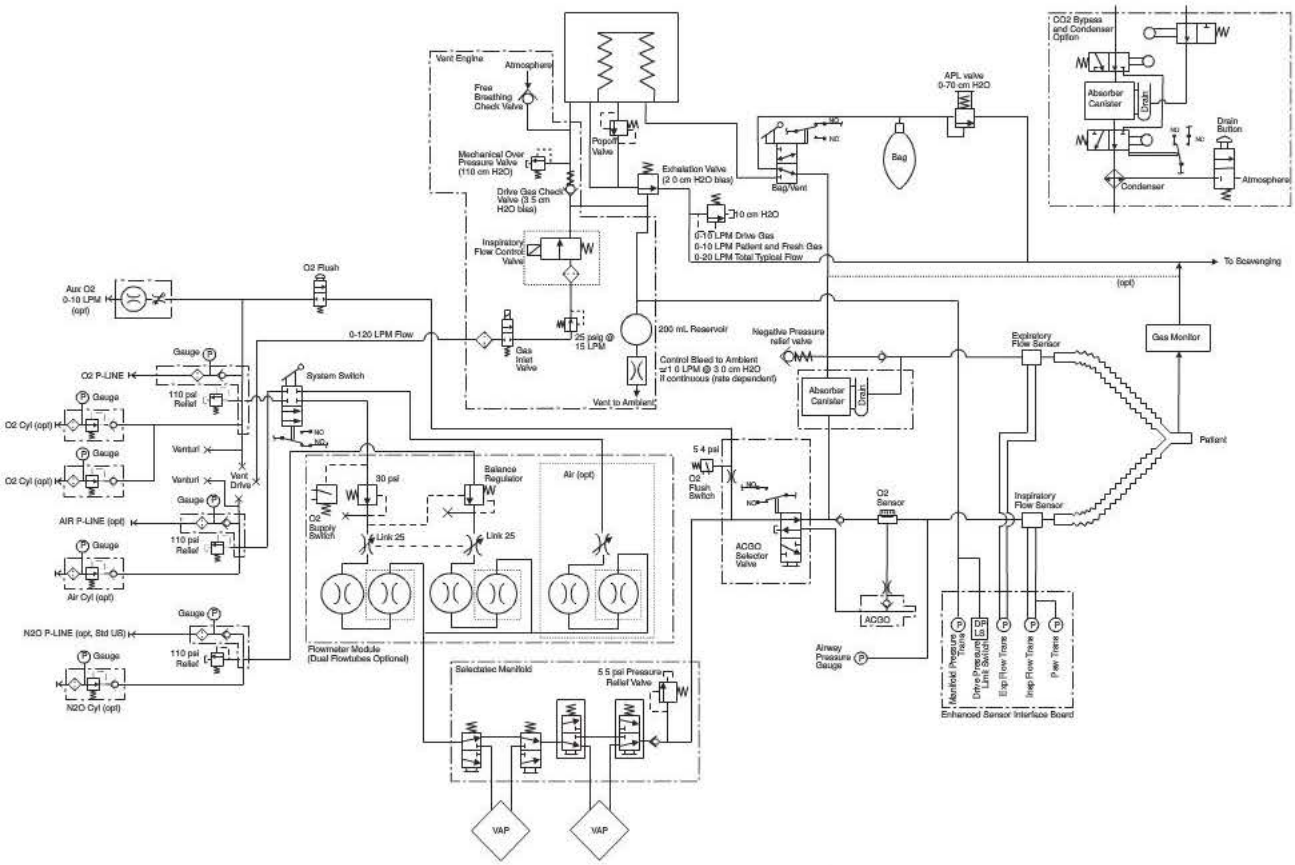

Figure 11-1 • System connection block diagram

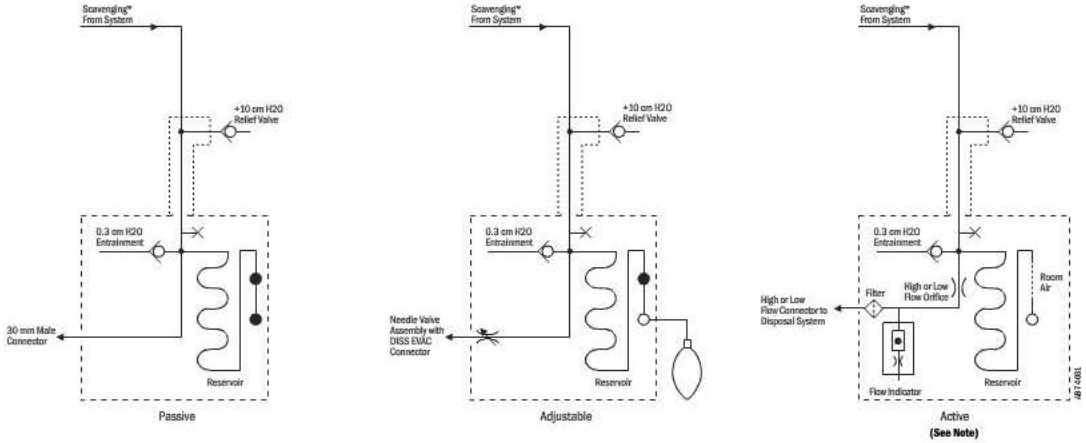

Key to Symbols

- ╳ = Plugged port (1/8 inch) for sample gas return.
- ● = Plugged port (30 mm) for auxiliary breathing system scavenging.
- ○ = Open port (30 mm) for auxiliary breathing system scavenging.
- * = 0 to 10 l/min drive gas, 0 to 10 l/min patient and fresh gas, 0 to 20 l/min total typical flow.

Note: Active AGSS systems with a 12.7 mm connector do not include the Flow Orifice and the Flow Indicator.

Figure 11-2 • Gas scavenging circuits

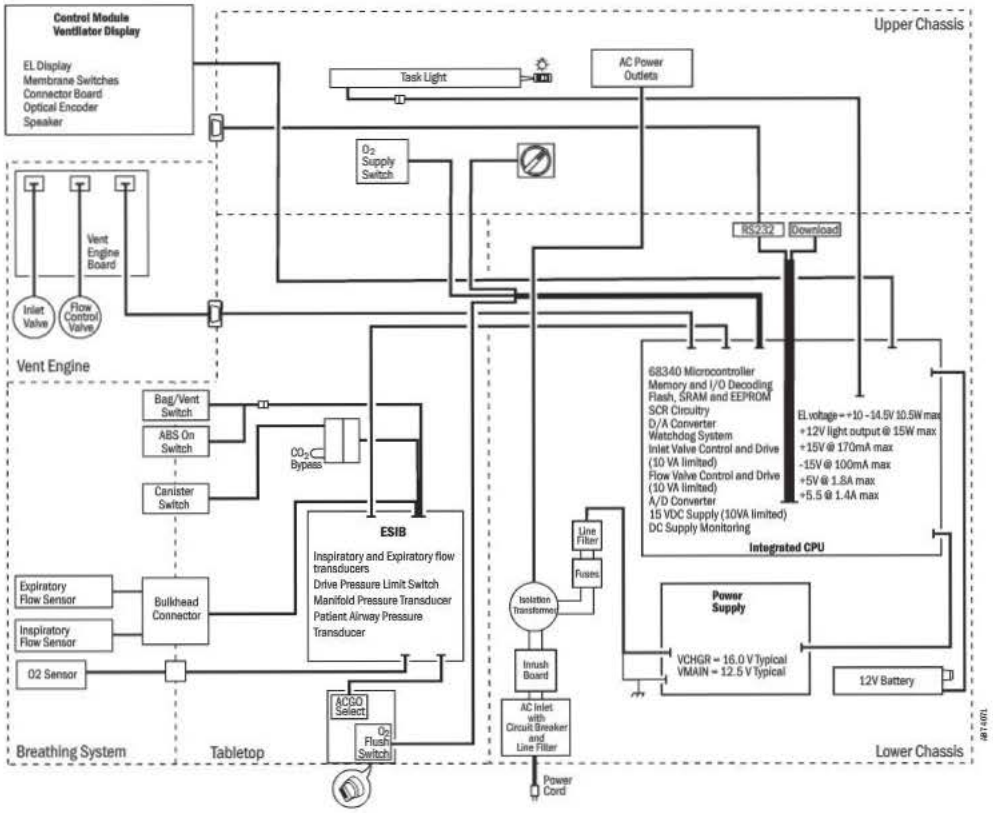

Figure 11-3 • Electrical cabling block diagram

Key to Numbered Components

1. Pipeline pressure gauge
2. Pipeline inlet
3. Cylinder pressure gauge
4. Cylinder inlet
5. Primary regulator (cylinder pressure)
6. High-pressure relief valve (758 kPa / 110 psi)*
7. Supply connections for the ventilator
   a. O_2 drive gas
   b. Air drive gas
8. System switch
9. Switch for low O_2 supply pressure alarm (used with the ventilator)
10. O_2 secondary regulator (207 kPa / 30 psi)*
11. O_2 flow control valve
12. O_2 flow tube(s)
14. O_2 Flush
    a. Flush valve
    b. Pressure switch (used with the ventilator)
15. N_2O balance regulator
16. N_2O flow control valve
17. N_2O flow tube(s)
19. Air flow control valve
20. Air flow tube(s)
21. Supply connection for Venturi suction
    a. O_2 drive gas
    b. Air drive gas
22. Vaporizer port valve
23. Vaporizer
24. Low-pressure relief valve (38 kPa / 5.5 psi)*
25. Auxiliary flowmeter (optional)
26. To ABS
27. To ACGO
28. Test port (primary regulator)
29. Test port (secondary/balance regulator)

* Approximate values

Key to Symbols

- Pneumatic Connection
- Filter
- Direction of Flow
- Check Valve

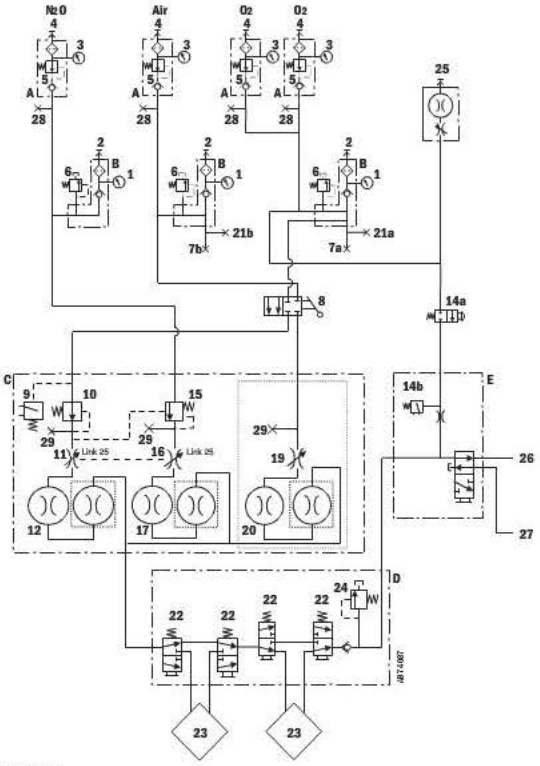

Figure 11-4 • Pneumatic circuit diagram

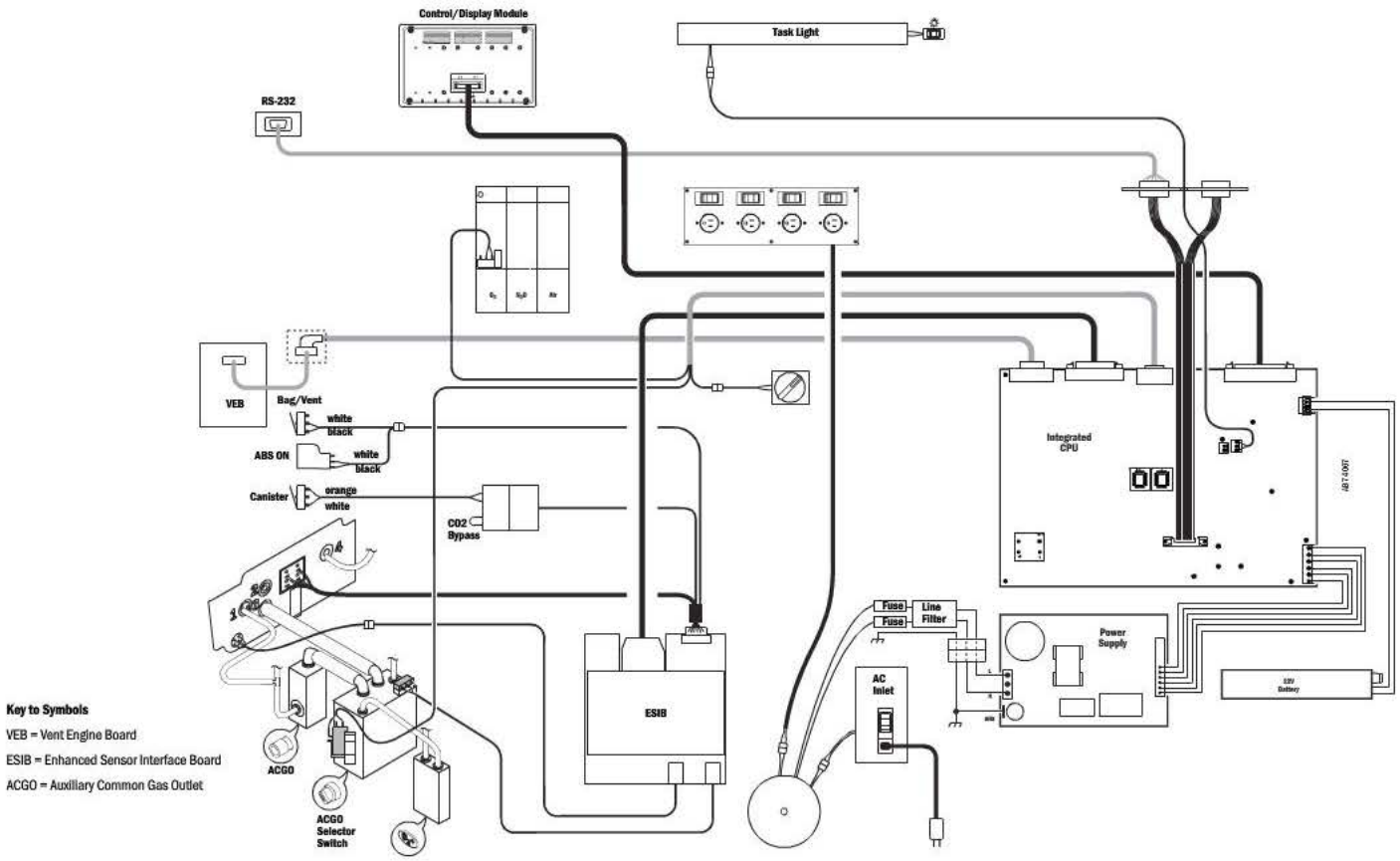

Figure 11-5 • Wiring harnesses

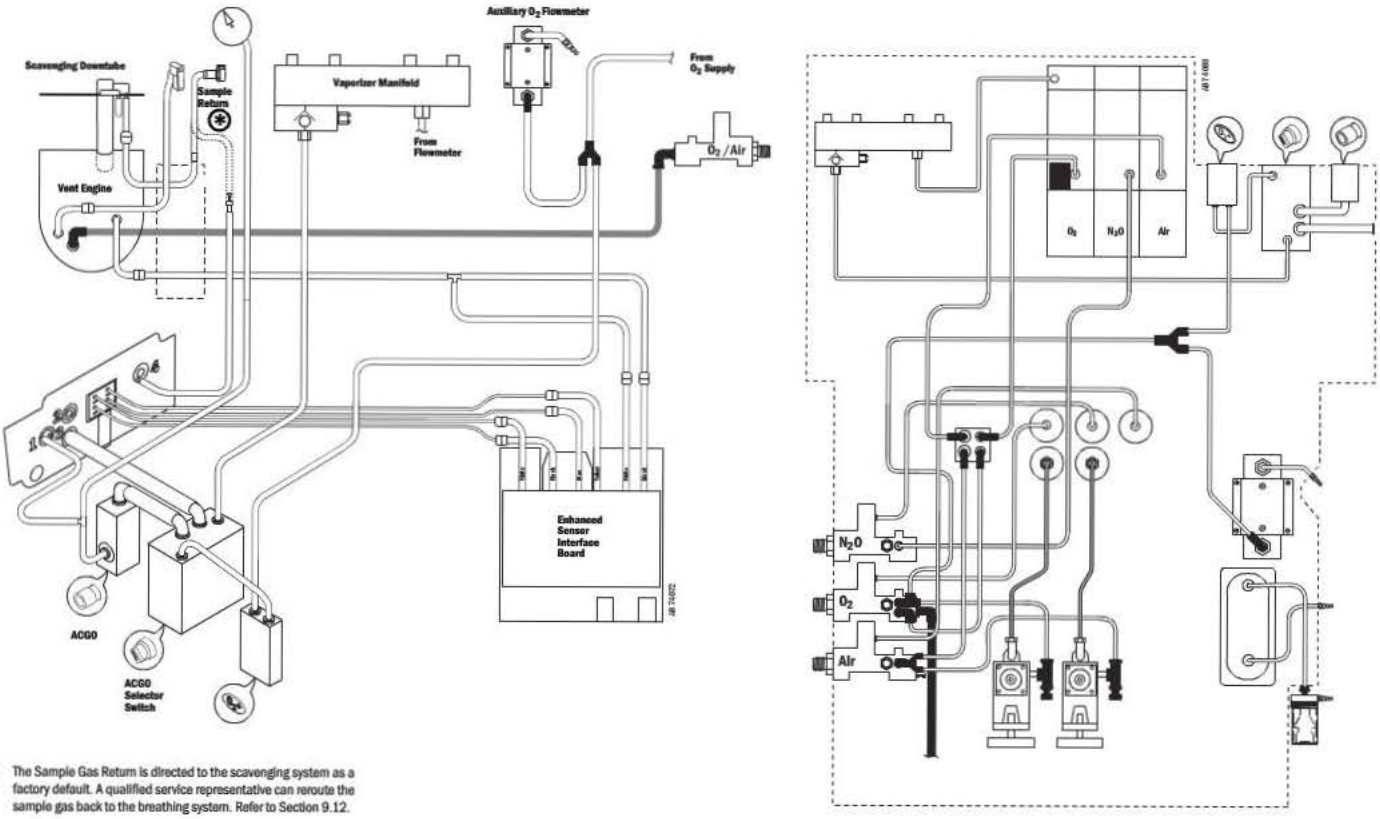

The Sample Gas Return is directed to the scavenging system as a factory default. A qualified service representative can reroute the sample gas back to the breathing system. Refer to Section 9.12.

Figure 11-6 • Tubing

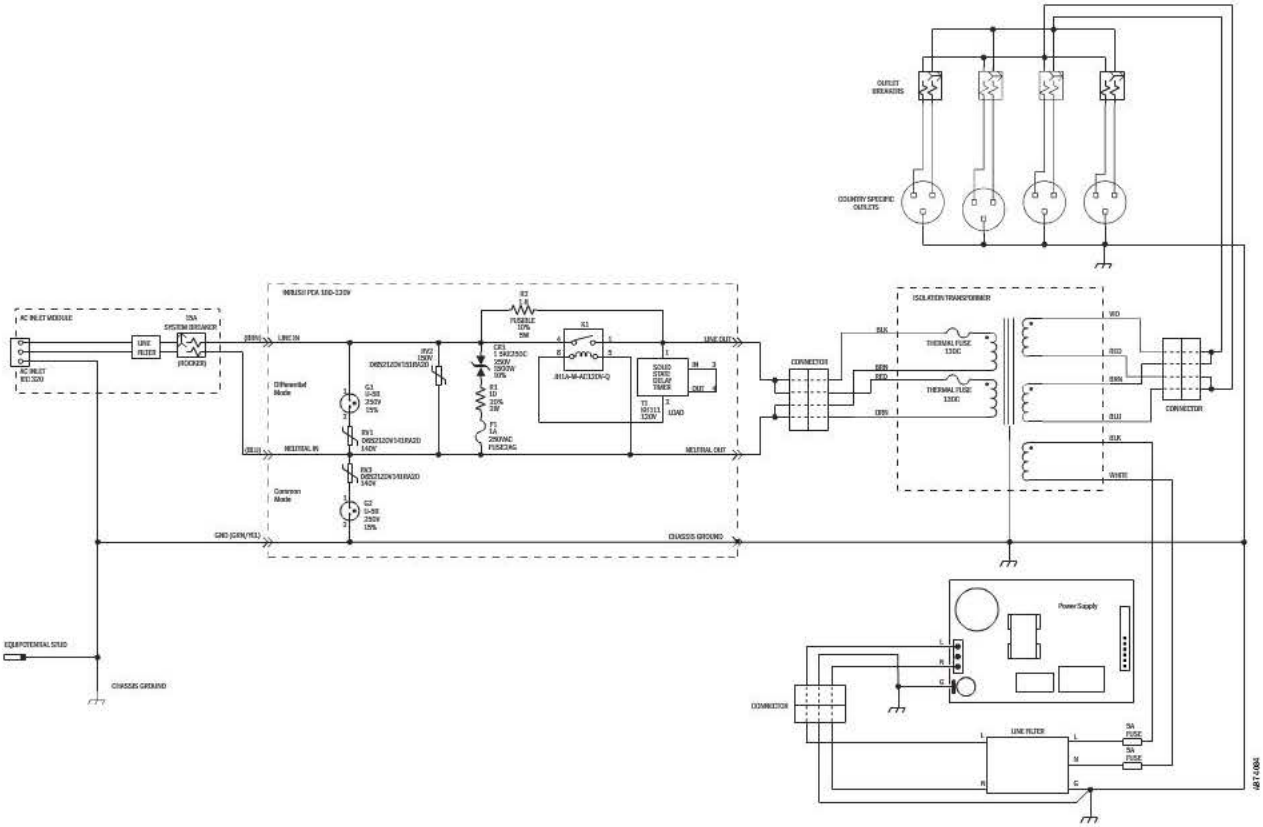

Figure 11-7 • Schematic, AC Inlet module; 100–120 V (Isolated outlets)

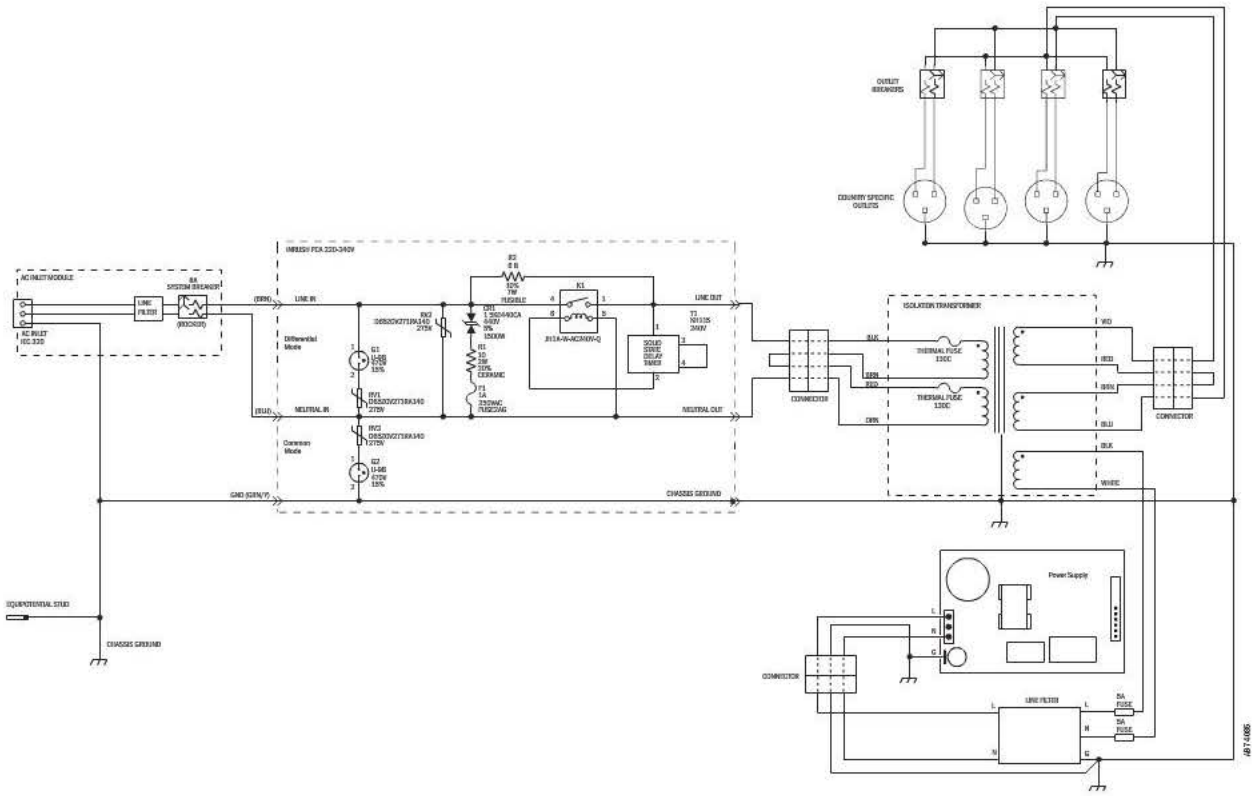

Figure 11-8 • Schematic, AC Inlet module; 220–240 V (Isolated outlets)

Aespire 7900
Technical Reference Manual, English
1009 0541 000
02 05 A 01 01 02
Printed in USA
©Datex-Ohmeda, Inc. All rights reserved