DEL MEDICAL

Anthem Generator
Installation, Operation & Service Manual

Models 30-400, 30-500, 32-500, 40-500, 40-600 and 50-650

FP10-0084.00

P/N 8000-ANTHEM-D

Revision C, May 1, 2010

Attention: Consult Accompanying Documents - As Applicable

Del Medical Systems Group

50B NorthGary Avenue
Roselle, IL 60172
USA
www.delmedical.com

Phone:1-847-288-7000
Fax:1-847-288-7011
Toll Free:1-800-800-6006

Table of Contents

Chapter 2 — Installation

Chapter 3 — Operation

Chapter 4 — Periodic Maintenance

Chapter 5 — Calibration and Adjustments

Chapter 6 — Component Replacement

Chapter 7 — Troubleshooting

Chapter 8 — Electrical Schematics

Chapter 9 — Illustrated Parts List

Notes

Safety Information

i

Introduction

The policy of Del Medical Systems Group is to manufacture X-ray equipment that meet high standards of performance and reliability. We enforce strict quality control techniques to eliminate the potential for defects and hazards in our products.

The intended use of this equipment is to provide power to generate X-rays for medical diagnosis in radiographic stationary X-ray systems. Use of this equipment in any other fashion may lead to serious personal injury.

The safety guidelines provided in this section of the manual are intended to educate the operator on all safety issues in order to operate and maintain the generator in a safe manner.

Warning

This x-ray unit may be dangerous to patient and operator unless safe exposure factors, operating instructions, and maintenance schedules are observed.

Statement of Liability

To prevent excess radiation exposure to patient and operator from either primary or secondary radiation, this generator must be operated and serviced by trained personnel who are familiar with the safety precautions required. While this generator has been designed for safe operation, improper operation or carelessness may result in serious injury or damage to equipment. The manufacturer or its agents and representatives assume no responsibility for the following:

1. Injury or danger to any person from x-ray exposure.
2. Overexposure due to poor technique selection.
3. Problems or hazards resulting from failure to install and maintain the equipment as specified in this manual.
4. Equipment which has been tampered with or modified. Del Medical Systems Group is not liable for any damage or injury arising from failure to follow the instructions and procedures provided within the manuals or associated informational material, or from user failure to use caution when installing, operating, adjusting, or servicing this equipment. Del Medical Systems Group is not liable for damage or injury arising from the use of this product for any other use than that intended by the manufacturer.
5. The use of ACCESSORY equipment not complying with the equivalent safety requirements of this equipment may lead to a reduced level of safety of the resulting system. Consideration relating to the choice shall include:
   - evidence that the safety certification of the ACCESSORY has been performed in accordance with the appropriate IEC 60601-1 and/or IEC 60601-1-1 harmonized standard.

Definitions

The table below defines the meaning of various symbols used on labels on the equipment.

	This warning symbol indicates a potential hazard to operators, service personnel or equipment. It indicates a requirement to refer to the accompanying documentation for details.
	This symbol indicates that there is accessible dangerous voltage.
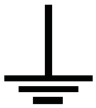	This symbol identifies a protective earth terminal, or ground.
	This symbol indicates that you must dispose of the generator properly according to local laws and regulations. Because the generator contains electronic components, it must be disposed of separately from household waste. When the generator reaches its end of life, contact local authorities to learn about disposal and recycling options.

Table 1-1: Definition of symbols found on device labels.

Safety Conventions Used in this Manual

Specific safety information is listed in this manual in the form of WARNING and CAUTION statements. Pay close attention to these statements - they contain important information on avoiding potential hazards to you or the equipment.

Warning Statements

- are used to indicate hazards or unsafe practices which COULD result in severe personal injury or death.
- appear in **bold** type.
- have a triangular symbol with an exclamation point above the text.
- are preceded by the word **Warning**.
- are always found before the step or piece of information to which they refer to.
- look like the following example:

Warning

This text will describe special safety precautions to follow in order to avoid unsafe practices that COULD result in severe personal injury or death.

Caution Statements

- are used to indicate hazards or unsafe practices which could result in minor personal injury or product or property damage.
- appear in **bold** type.
- have a triangular symbol with an exclamation point above the text.
- are preceded by the word **Caution.**
- are always found before the step or piece of information to which they refer to.
- look like the following example:

Caution

This text will describe special safety precautions to follow in order to avoid unsafe practices that could result in personal injury or product or property damage.

Equipment Safety Guidelines

The following warnings and cautions are specific to the generator. Read them carefully - some of them **are not obvious** to typical equipment use.

All movable assemblies and parts of this equipment must be operated with reasonable care. The manufacturer's equipment recommendations as outlined in the User and Installation/Maintenance Manuals accompanying the equipment must be observed.

Routine inspection of these assemblies should be performed by qualified service personnel on a semi annual basis. Only properly trained service personnel should be permitted access to internal assemblies, as live electrical components are present. Be sure line disconnect switches are open or other appropriate safety precautions are followed before service work is performed.

Failure to follow manufacturer's service personnel's recommendations may result in serious injury or death to the operator and those in the immediate area.

Warning

Turn off electrical power to the generator at power source before servicing the generator. Also, make sure that power source is locked out and tagged "Generator Being Serviced" before servicing generator. You could get seriously shocked or burned if you do not.

Warning

Do not operate the generator in an explosive atmosphere (such as anesthetic gas). Doing so can cause an explosion or fire hazard causing serious injury.

Caution

Always use an anti-static wrist strap when working on electrostatic sensitive devices.

Warning

All of the movable assemblies and parts of this equipment should be operated with care and routinely inspected in accordance with the manufacturer's recommendations contained in this manual.

Only properly trained and qualified personnel should be permitted access to any internal parts. Live electrical terminals are deadly; be sure line disconnect switches are opened and other appropriate precautions are taken before opening access doors, removing enclosure panels, or attaching accessories.

For all components of the equipment, protective earthing means must be provided in compliance with the national regulations.

Warning

This generator is intended to be used as part of a system for the intended generation of X-rays for medical diagnosis.

X-rays generate a potential risk for both patients and operators.

For this reason, the application of X-rays for a given medical purpose must aim at the minimization of radiation exposition to any persons.

Those persons responsible for the application must have the specific knowledge according to legal requirements and regulations and must establish safe exposure procedures for this kind of systems.

Those persons responsible for the planning and installation of this equipment must observe the national regulations.

Safety Information

In Case of Malfunction

If a malfunction is suspected, turn the power off at the main line disconnect and have a qualified service engineer inspect the equipment. Never open a component cover, because potentially dangerous voltages are present.

Safety at Maintenance

Personnel engaged in maintenance activities should exercise normal caution and care while working with electro-mechanical equipment. Before removing or opening any electrical power panels or covers, verify that the incoming power supply is turned OFF.

Warning

In the event maintenance procedures require power to be supplied to the unit, extreme care MUST be exercised to insure the safety of service and any other personnel in the area.

Always verify that the equipment is properly grounded before attempting any electrical operation or adjustment.

Warning

The main capacitor bank (located on the left side of the Power Module) contains a very high charge when power is applied. This charge is a fatal shock hazard. After power has been disconnected from the system, with power off, allow a minimum of 15 minutes for the capacitor bank to discharge or follow the "Discharge Procedure" on page 6-2. Check the capacitor bank for zero volts with a DC voltmeter before working on any internal circuitry.

Caution

Certain tests require the production of X-rays. Field personnel should take precautions to ensure their personal safety and the safety of others in close proximity. Minimum precautions are as follows:
- Wear lead aprons
- Personnel remaining in the X-ray room during exposure should be behind a lead shield
- Minimize radiation scatter through doorways, walls and floor.

Radiation Safety

Everyone associated with X-ray work must be familiar with the recommendations of the Center for Devices and Radiological Health (CDRH), the National Institute for Standards and Technology (NIST), the National Council on Radiation Protection (NCRP), and the International Committee on Radiation Protection (ICRP).

Be sure that all personnel authorized to operate the X-ray system and their supervisors are fully acquainted with the established regulations of the authorities named above. All personnel should be monitored to ensure compliance with recommended procedures.

Current sources of information include:

- *National Council on Radiation Protection Report No. 33* (“Medical X-ray and gamma ray Protection for Energies up to 10 MEV-Equipment Design and Use”).
- *National Bureau of Standards Handbook No. 76* (“Medical X-ray Protection up to Three Million Volts”). Refer to NCRP Report No. 33.
- Current recommendations of the International Committee on Radiation Protection.

Although X-radiation is hazardous, X-ray equipment does not pose any danger when properly used. Be certain all operating personnel are properly educated concerning the hazards of radiation. Persons responsible for the system must understand the safety requirements and special warnings for X-ray operation. Review this manual and the manuals for each component in the system to become aware of all safety and operational requirements.

Warning

Ensure exposure parameters are properly adjusted within safety limits.

Warning

Incorrectly positioning the X-ray tube and Collimator could cause the X-ray field to be misaligned with the bucky, resulting in unacceptable images.

Those responsible for the planning of x-ray and gamma ray equipment installations must be thoroughly familiar with and comply completely with NCRP Number 49, "Structural Shielding Design and Evaluation for Medical Use of X-Rays and Gamma Rays of Energies up to 10 MEV", as revised or replaced in the future.

Radiation Protection

Serious unfavorable health effects can result from short term exposure to high levels of ionizing radiation (such as X-rays) as well as from long term exposure to low levels. Personnel who operate the X-ray system that the Anthem is installed with should familiarize themselves with both the short term and the long term effects of radiation exposure and take appropriate measures to minimize the amount of radiation to which they are exposed while performing their duties. Some effects of X-radiation are cumulative, and may extend over a period of months or years. The best safety rule for X-ray operators is to avoid exposure to the primary beam at all times.

Ionizing radiation occurs naturally in the environment. It is generated by astronomical radiation sources such as the sun and the stars, and by the soil under our feet. The atmosphere filters radiation from astronomical sources. As a result, the radiation level from these sources is much lower at sea level than on the summit of high mountains. Radiation generated in the soil varies greatly from place to place depending on the composition of the soil. For example, areas rich in granite rock have a higher level of radiation than other areas.

Any materials placed in the path of the beam absorb natural as well as man-made radiation, such as the X-rays used in the X-ray system the Anthem is installed with. Materials with a high atomic number, such as tungsten, lead, and uranium, absorb X-rays much more effectively than materials with a low atomic number such as hydrogen, aluminum, or beryllium. Therefore, lead is used for shielding the radiologist's workstation in most X-ray facilities. If there are windows in the partition separating the operator from the patient, these windows are typically glazed with lead glass and provide effective protection against ionizing radiation.

To minimize dangerous exposure, use movable lead screens, lead-impregnated gloves, and lead-impregnated aprons. These protective devices must contain 0.25 millimeter thickness of lead or the equivalent. Use such protective devices for all operators, observers, and/or servicing personnel exposed to radiation fields of five or more milli-Roentgens per hour.

The shielding provided for a typical X-ray facility's operator workstation is generally quite effective and reduces the residual radiation from diagnostic X-rays to a level that is comparable to or lower than natural background radiation. If the operator abandons the protected environment of the workstation, he or she may be exposed to a significantly higher level of radiation. For a single exposure this may still not lead to serious health effects, but repeated carelessness in this regard may lead to serious consequences.

Any object in the path of the primary beam produces scattered radiation. In the absence of proper precautions, scattered radiation can result in a substantial radiation dose to the operator or any other personnel in the facility. Moveable screens may be used to shield occupied areas from scattered radiation.

The X-ray Generator/host system used to power the X-ray System only produces X-rays when high voltage is applied to the X-ray tube. When the high voltage is removed, X-ray emission ceases without delay.

Identification Labels

The generator components have manufacturing and certification information affixed. The manufacturing label contains:

- The full name and address of the manufacturer of the component
- The place, month, and year of manufacture
- The model number and serial number of the component

The certification label also states that the component complies with either "21CFR, Subchapter J", or the applicable DHHS standards under the Radiation Control for Health and Safety Act of 1968 (or its equivalent).

A label may combine both manufacturing and certification information.

Generator Labels

The generator identification label is located on the back of the upper cabinet as shown in Figure i-1.

Figure i-1. Generator Identification Label.

Manufacturer's Responsibility

Although this equipment incorporates protection against X-radiation other than the useful beam, practical design does not provide complete protection. Equipment design does not compel the operator or assistants to take the necessary precautions; nor does it prevent the possibility of improper use (authorized or unauthorized persons carelessly, unwisely, or unknowingly exposing themselves or others to direct or secondary radiation). Allow **only** authorized, properly trained personnel to operate this equipment.

Be certain that all individuals authorized to use the equipment are aware of the danger of excessive exposure to X-radiation.

This equipment is sold with the understanding that the manufacturer, its agents, and representatives, do not accept any responsibility for overexposure of patients or personnel to X-radiation.

Furthermore, the manufacturer does not accept any responsibility for overexposure of patients or personnel to X-ray radiation generated by the equipment used in conjunction with the Anthem's components as a result of poor operating techniques or procedures.

No responsibility is assumed for any unit that has not been serviced and maintained in accordance with the technical service manual, or which has been modified or tampered with in any way.

Monitoring Personnel

Monitoring personnel to determine the amount of radiation to which they have been exposed provides a valuable crosscheck to determine whether or not safety measures are adequate. This crosscheck may reveal inadequate or improper radiation protection practices and/or serious radiation exposure situations.

The most effective method of determining whether the existing protective measures are adequate is the use of instruments to measure the exposure (in rads). This measurement should be taken at all locations where the operator, or any portion of the operator's body, may be inadequately shielded during exposure. Exposure must never exceed the accepted tolerable dose.

A frequently used, but less accurate, method of determining the amount of exposure is placement of film at strategic locations. After a specified period of time, develop the film to determine the amount of radiation. Fluorescent screens (used in a darkened room) may also be used to detect excessive radiation.

A common method of determining whether personnel have been exposed to excessive radiation is the use of film badges. These are X-ray sensitive film enclosed in a badge that incorporates metal filters of varying degrees of transparency to X-ray radiation. Even though this device only measures the radiation reaching the area of the body on which it is worn, it does provide an indication of the amount of radiation received.

Radiation Protection Survey

A radiation protection survey must be made by a qualified expert after every change in equipment or change in operating conditions which might significantly increase the probability of personnel receiving more than the maximum permissible dose equivalent.

Restrictions on Use

Warning

Do not install components or accessories that were not intended for use by the system. Failure to comply could result in damage to the equipment or injury to personnel.

The user is responsible for ensuring that the application and use of the Anthem does not compromise the patient contact rating of any equipment used in the vicinity of, or in conjunction with, the system.

Caution

Observe all safety precautions recommended by the accessory equipment manufacturer in the user documentation provided with the equipment.

The hardware specified for use with the Anthem has been selected, tested, and verified by Del Medical to meet the intended applications. All specified hardware meets applicable regulatory agency requirements for those countries where it is offered for sale with respect to its intended applications.

Hazardous Materials

The X-ray tube and collimator used with the Anthem contain lead. Refer to the manual provided with the X-ray tube and collimator for additional information regarding hazardous materials.

Applicable Standards

The Anthem generator complies with the following regulatory requirements and design standards:

- Conforms to UL 60601-1, Can/CSA C22.2 No. 601.1, IEC60601-1, IEC60601-2-7.

  Type of protection against electric shock: Class I.

  No applicable parts.

  Degree of protection against harmful ingress of water: Ordinary equipment.

  Mode of operation: Continuous with intermittent loading (1% duty cycle).

Equipment not suitable for use in presence of a FLAMMABLE ANESTHETIC MIXTURE WITH AIR OR WITH OXYGEN OR NITROUS OXIDE.

Grounding Information

This equipment must be grounded to a separate earth ground. No other means is acceptable. Refer to the National Electrical Code for grounding of Radiographic equipment.

The figure below shows a typical interconnected x-ray system with an x-ray generator.

It is comprised of:

1. Wall Stand
2. Collimator
3. X-Ray Tube
4. Table
5. X-Ray Generator
6. Collimator Power Supply

All of these components are grounded to a common bus according to national and local electrical codes. Also, All of the components comply with UL 60601 Standards.

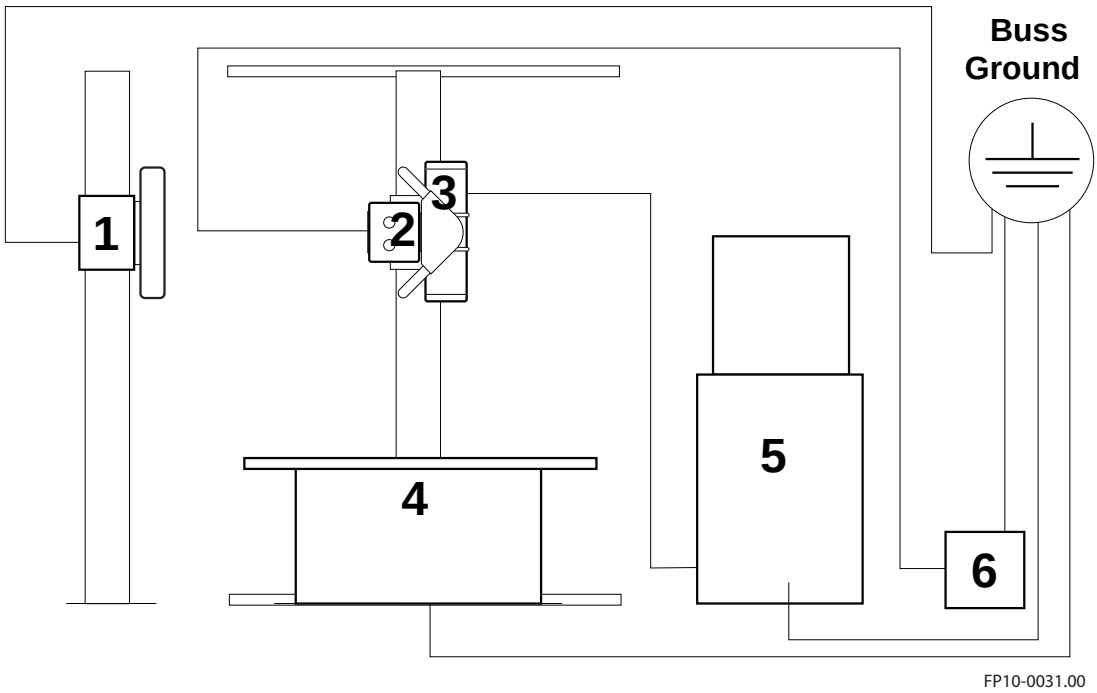

Figure i-2. System Grounding.

Optical fiber components

Some of the equipment built-in into this X-ray system may use optical fiber cables and connections for signal transmission.

Caution

Fiber optic components are very delicate. Improper handling may cause costly interruptions in operation of the system.

Warning

To prevent eye damage, never look directly into a fiber optic cable connector or mating adapter. Never assume laser power is turned off or the fiber is disconnected at the other end.

Considering the fact that an optical fiber is a strand of glass about the same diameter as a human hair, fiber optic patch cords and connectors are remarkably durable. However, careful handling will ensure continued high performance and long life. Do not pull or kink patch cords, as the glass strand in the middle might become damaged or broken. Even if the fiber is not permanently damaged, a sharp bend will cause excessive signal loss.

Fiber optic cables work by bending the light signal as it travels. But, the light can only tolerate so much bending. Keep patch cord bend radius no less than an inch. ***Never use tie wraps as you would with electrical cables.***

If there is need for routing, connecting, and/or disconnecting fiber optic cables, follow the handling procedures below to minimize the time and expense associated with broken component fibers.

1.0.2 How to handle fiber optic components

- Wear finger cots or gloves. Your hands may look clean, but dirt and oils on them can damage the fiber and contaminate connectors.
- Never use the fiber pigtail to pick up or support the weight of the device. Keep both the device and the optical connector together in your hand(s)
- The fiber is made of a very pure, expensive glass. Treat it with the same care that would be used when handling expensive crystal glass.
- Do not allow kinks or knots to develop in the fiber.

- Carefully work out any tangles-patience will save time and money
- Do not pull on the fiber when kinks or knots are present. Pulling will only cause knots, kinks, and curls to tighten, increasing the risk of breakage.

- Always use the correct tools for stripping and cleaving the fiber. It will save time and reduce breakage caused by scratches.
- Follow all ESD precautions and approved fiber cleaning procedures.

Always read and comply with the handling instructions on the shipping container.

Record of Revisions

Revision History

REV	Date	Reason for Change
C	5-1-2010	Added info on AEC option to all chapters.
B	8-10-2009	Models 40-500 and 50-650 added. Calibration procedures changed (mA and kV). X-ray tubes added to compability listing. Caution statements about ESD added. Wiring diagrams revised. Spare parts list revised with added sealing washers to oil level window screws.
A	4-23-2009	Original

Table ii-1. Revision History

List of Affected Pages

Page Number	Rev Level	Page Number	Rev Level	Page Number	Rev Level
All	A	TOC,i-5, ii-1, 1-3, 1-10, 1-13, 1-16, 2-3, 2-4, 2-44, 3-24, 3-27, 4-9, 4-12, 5-9, 5-10, 6-6, 6-15 to 6-20, 8-1, Schematics 034-5089, 034-5090 and Spare Part Drawing 110-5105	B	All	C

Table ii-2. List of Affected Pages

Introduction

1

1.1 Introduction

This manual contains the necessary instructions for proper operation, installation, adjustments and calibration of the Anthem High Frequency Generator.

All persons operating or servicing this equipment need to have read this manual beforehand. You must have a thorough understanding of the Anthem and its proper use before you make any radiographic exposures.

Figure 1-1. Anthem Generator and Control Console

1.1.1 X-Ray Tube

The Anthem is shipped with tube loading programs specifically designed for the individual x-ray tubes which are approved for use. The programs are based on focal spot size and anode heat dissipation of the tube insert that will be used with the generator. Tube inserts of load capacities other than those for which the Anthem was configured may be permanently damaged if used with the incorrect tube loading program. Consult Del Medical Inc. for additional information. Refer to “Compatibility listing” on page 1-17 for a list of compatible tubes.

1.2 Description

The Anthem generator is intended for use in radiographic stationary X-ray systems only. The X-ray generator consists of an upper main power cabinet, a lower cabinet, and a control console.

The upper main power cabinet contains the inverter, the filament drivers, the power supply, the main control board, and interface connections to the room equipment.

The lower cabinet contains the HT tank, and the optional line match transformer.

The Control console allows the operator to select the technique factors etc., and to initiate an X-ray exposure.

The advanced Anthem family of generators utilizes the latest in multi-pulse high frequency technology to produce waveforms near constant potential.

The features include:

- Menu driven, soft button approach makes the Anthem very easy to learn and gives maximum user flexibility.
- Microprocessor control improves ease of use, reliability and serviceability.
- Two point technique selection mode utilizes Isowatt tube current control, which provides the maximum mA at the selected combination of kV and mAs for the shortest possible exposure times.
- Operator has the ability to exercise traditional three factor control of kV, mA, and time, in three point operational mode.
- 30 kW output which provides up to 500 mA, 40 kW output provides up to 600 mA and 50 kW output provides up to 700 mA for motion stopping power.
- Back lighted liquid crystal display is easy to read from almost any angle or lighting condition.
- Built in anode heat calculator automatically displays percentage of heat units on anode.

1.2.1 General features

- Individual control of kV, mAs, mA and time with the availability of both two and three point operating modes
- Liquid Crystal Display
- Closed loop kV stabilization
- Closed loop mA stabilization
- Automatic line voltage compensation
- Tube protection circuitry
- Space saving design for versatile installation
- Built in anode heat calculator
- UL 60601 Compliant
- SD memory card slot

1.2.2 Power Requirements

The Anthem may be operated on a single or three phase power line (see pre-installation chapter of this manual for more details).

1.2.3 Options

- Control console wall mounting bracket
- Control console pedestal

1.3 Dimensions

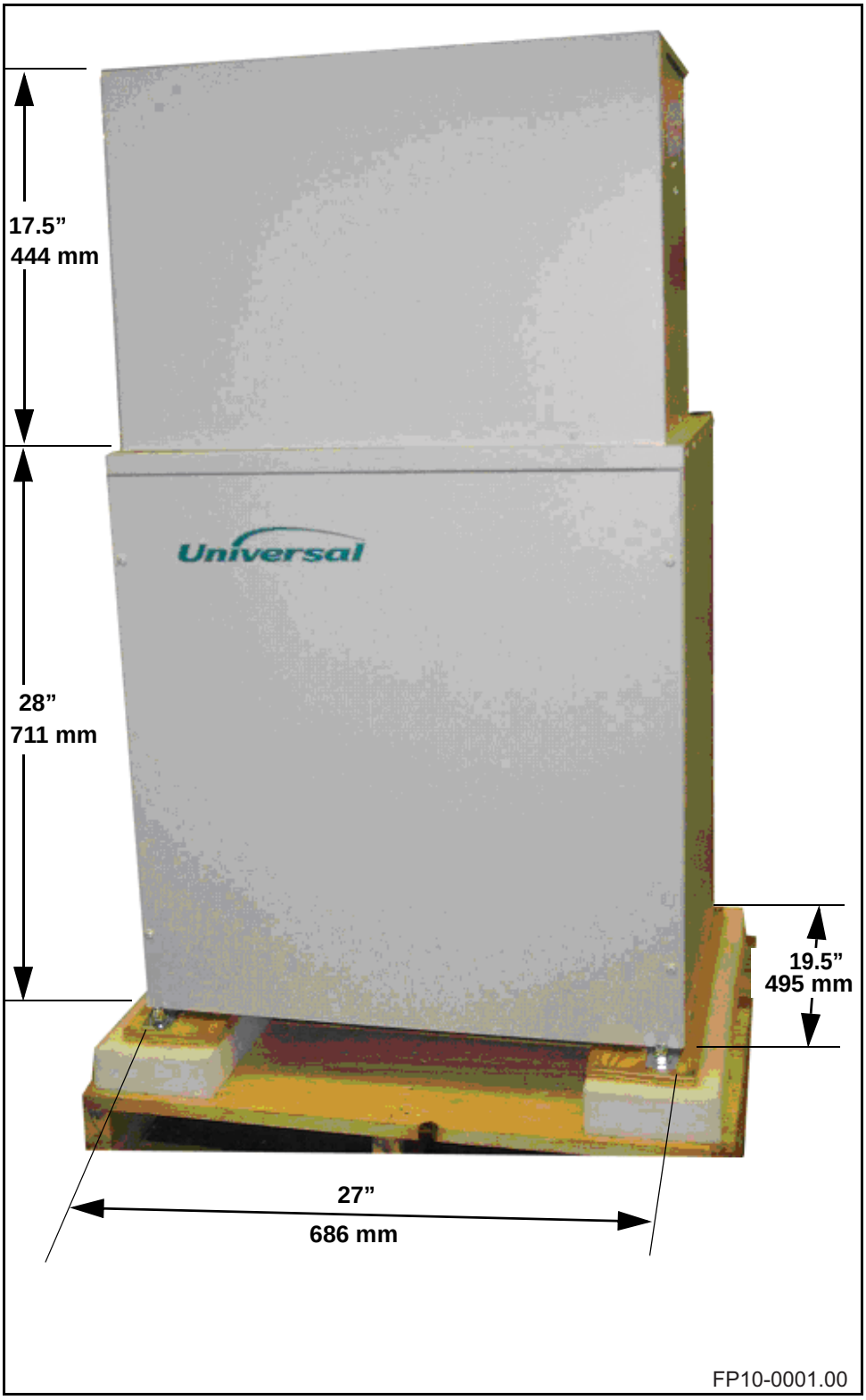

Figure 1-2. Rack Cabinet Dimensions

Caution

Do not drill equipment mounting holes in pre-tensioned or post tensioned concrete floors before determining the location of the tensioned wire ropes. Consult with customer or responsible project engineer to locate and avoid drilling through wire rope. Cutting through tensioning cables can cause severe structural damage.

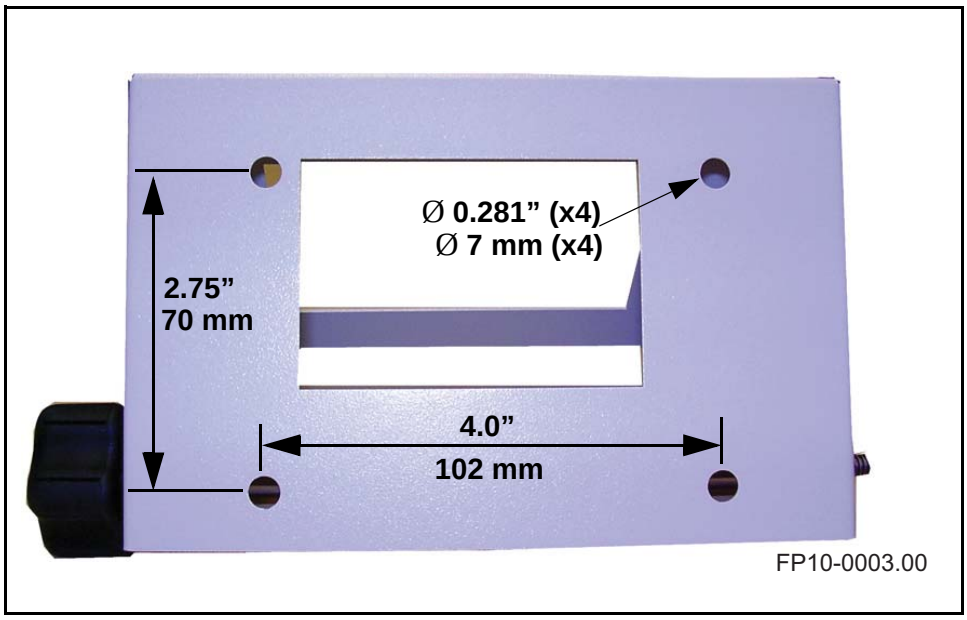

Figure 1-3. Optional Control Console Wall Bracket Mounting Hole Dimensions

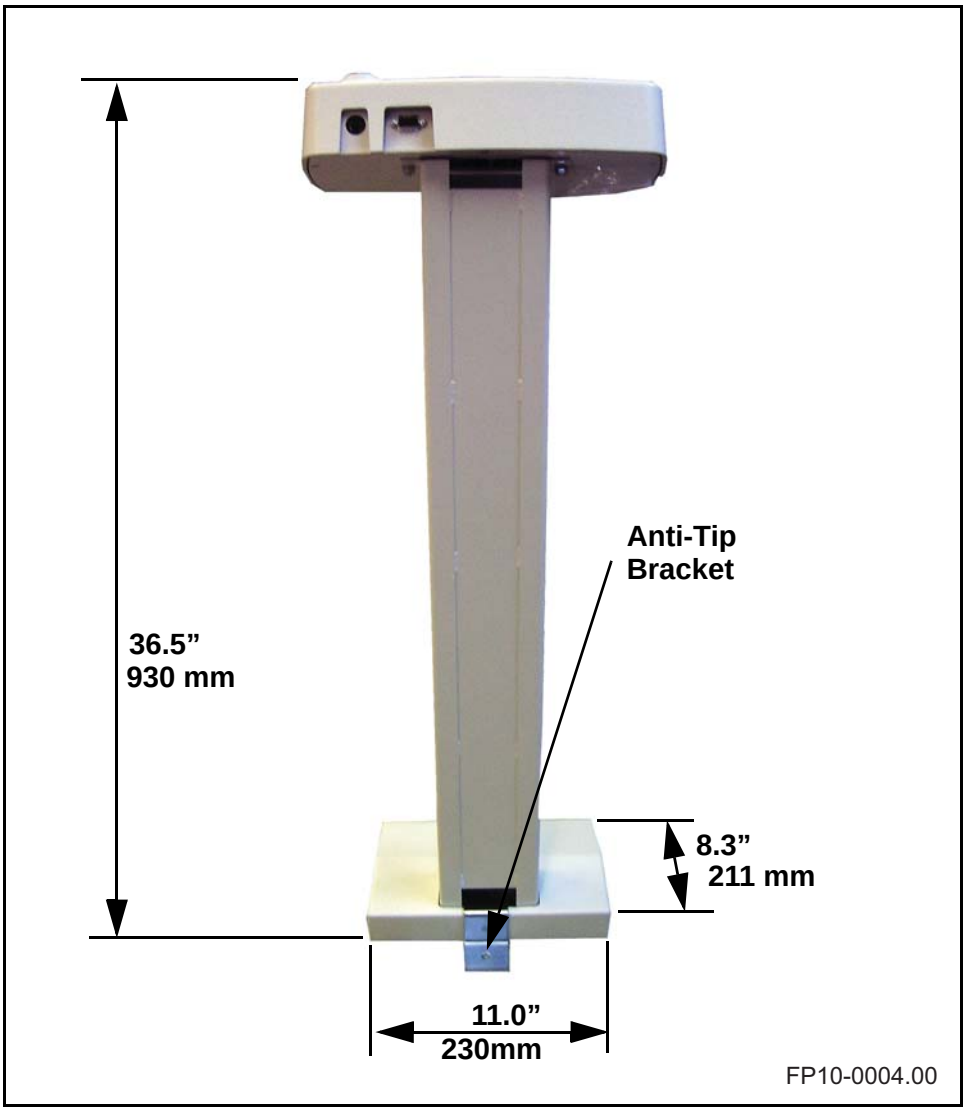

Figure 1-4. Control Console Floor Stand Dimensions

1.4 Minimum Space Requirements

Figure 1-5 shows minimum floor foot print for the Anthem.

Figure 1-6 shows minimum floor foot print requirements when local regulations require the Anthem to be anchored to the floor.

Note
To fully open the front of the power module, an additional 12 3/4″ of space is required in front of the generator at the height of the upper cabinet.

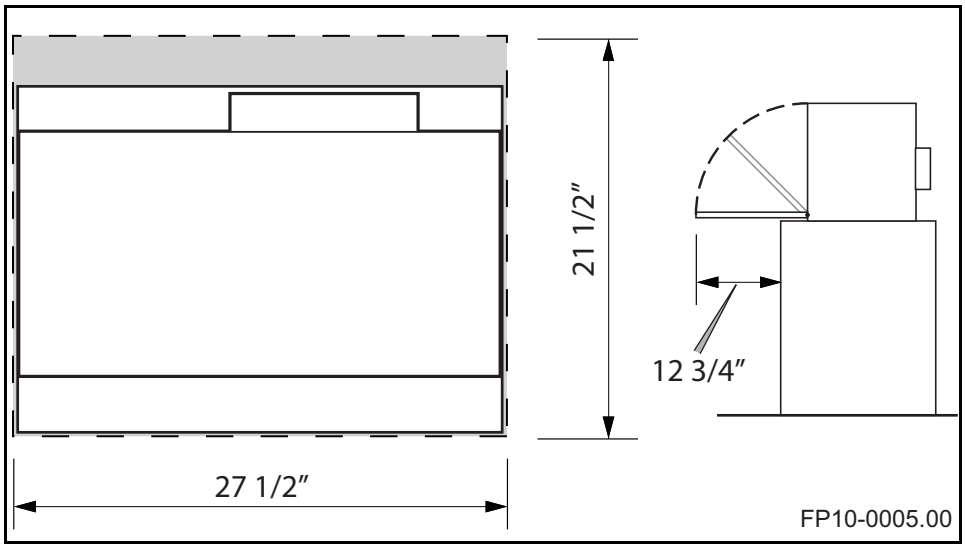

Figure 1-5. Minimum foot print required without anchor brackets.

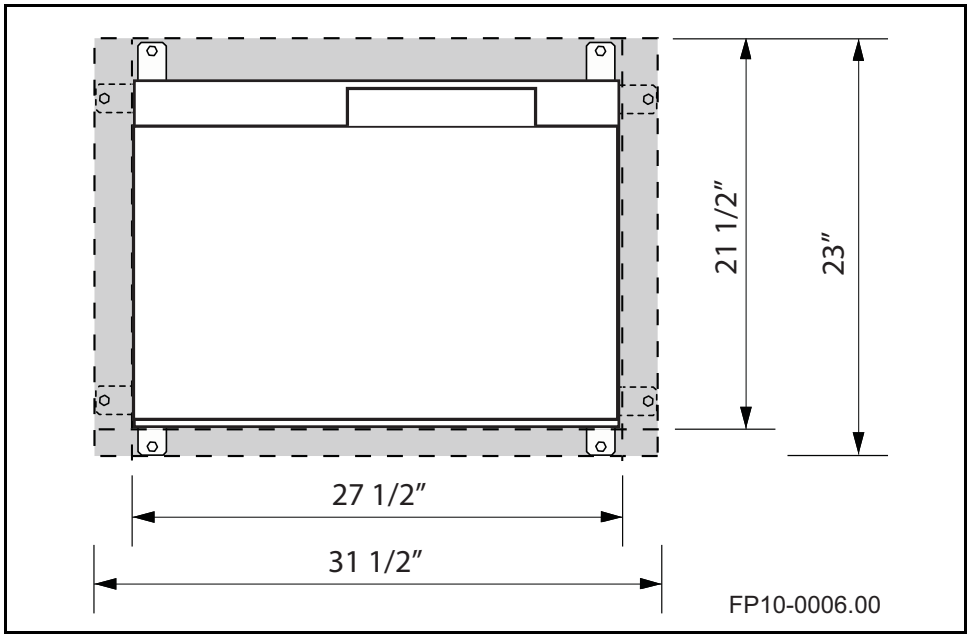

Figure 1-6. Minimum foot print required with anchor brackets.

1.5 Specifications

Configuration: Model Anthem 30-400; 30 kW, 400mA, single phase

General	
Input power	208/240 VAC, 1-phase, 1 A Continuous, 210 A/180 A Momentary, 50/60 Hz
Output power	30 kW, 400 mA For lock: 24VDC, 4A For manual collimator: 24VAC, 8A, 50/60 HZ, 10% Duty For bucky: 120VAC, 1A, 50/60 HZ Room in use light (for X-ray Indicator): Normally open relay contact, max contact rating 10A at 240VAC
Mode of Operation	Continous with intermittent loading (1% duty cycle)
Temperature Limits	Transit/Storage: – 40° F to +158° F; – 40° C to +70° C Operating: +50° F to +95° F; +10° C to +35° C
Relative Humidity Limits	Transit/Storage: 10% to 100% Operating: 10%-80% Non-Condensing
Atmospheric Limits	14.5 inHg to 30.74 inHg 500 hPa to 1060 hPA
Weight	344 lb. (including shipping crate)
Degree of protection against ingress of water	Ordinary
Certifications	CLASSIFIED C UL US 20VM Medical Equipment With respect to electrical hazards only in accordance with UL60601-1, CAN/CSA C22.2 No. 601.1, IEC60601-1, IEC60601-2-7
Maximum power technique	75 kV, 400 mA
Line regulation	+/- 7%
Duty Cycle	1%
kV Selection	40 to 125 kV in increments of 1 kV
kV Accuracy	Indicated value +/- 5%
mAs Selection	1 - 500 mAs, increments of 1.2 x previous value
mAs Accuracy	+/- (.6 mAs + 5% of indicated value)
mA Selection	25 - 400mA
mA Accuracy	Indicated value +/- 10%
Time Selection	10 milliseconds to 6 seconds, in 77 steps
Time Accuracy	+/- 10%
Technique Factor Max Line Current	75 kV, 400 mA, 200ms
Regulatory	Meets the requirements of 21 CFR Sub Chapter J.

Configuration: Model Anthem 30-500; 30 kW, 500mA, single phase

General	
Input power	208/240 VAC, 1-phase, 1 A Continuous, 226 A/195 A Momentary, 50/60 Hz
Output power	30 kW, 500mA For lock: 24VDC, 4A For manual collimator: 24VAC, 8A, 50/60 HZ, 10% Duty For bucky: 120VAC, 1A, 50/60 HZ Room in use light (for X-ray Indicator): Normally open relay contact, max contact rating 10A at 240VAC
Mode of Operation	Continous with intermittent loading (1% duty cycle)
Temperature Limits	Transit/Storage — Operating – 40° F to +158° F — +50° F to +95° F – 40° C to +70° C — +10° C to +35° C
Relative Humidity Limits	Transit/Storage — Operating 10% to 100% — 10%-80% Non-Condensing
Atmospheric Limits	14.5 inHg to 30.74 inHg 500 hPa to 1060 hPA
Weight	344 lb. (including shipping crate)
Degree of protection against ingress of water	Ordinary
Certifications	Medical Equipment With respect to electrical hazards only in accordance with UL60601-1, CAN/CSA C22.2 No. 601.1, IEC60601-1, IEC60601-2-7
Maximum power technique	60 kV, 500 mA
Line regulation	+/- 7%
Duty Cycle	1%
kV Selection	40 to 125 kV in increments of 1 kV
kV Accuracy	Indicated value +/- 5%
mAs Selection	1 - 500 mAs, increments of 1.2 x previous value
mAs Accuracy	+/- (.6 mAs + 5% of indicated value)
mA Selection	25 - 500 mA
mA Accuracy	Indicated value +/- 10%
Time Selection	10 milliseconds to 6 seconds, in 77 steps
Time Accuracy	+/- 10%
Technique Factor Max Line Current	60 kV, 500 mA, 200 mS
Regulatory	Meets the requirements of 21 CFR Sub Chapter J.

Configuration: Model Anthem 40-500; 40 kW, 500mA, single phase

General	
Input power	208/240 VAC, 1-phase, 1 A Continuous, 256 A/222 A Momentary, 50/60 Hz
Output power	40 kW, 500mA For lock: 24VDC, 4A For manual collimator: 24VAC, 8A, 50/60 HZ, 10% Duty For bucky: 120VAC, 1A, 50/60 HZ Room in use light (for X-ray Indicator): Normally open relay contact, max contact rating 10A at 240VAC
Mode of Operation	Continous with intermittent loading (1% duty cycle)
Temperature Limits	Transit/Storage — Operating – 40° F to +158° F — +50° F to +95° F – 40° C to +70° C — +10° C to +35° C
Relative Humidity Limits	Transit/Storage — Operating 10% to 100% — 10%-80% Non-Condensing
Atmospheric Limits	14.5 inHg to 30.74 inHg 500 hPa to 1060 hPA
Weight	344 lb. (including shipping crate)
Degree of protection against ingress of water	Ordinary
Certifications	CLASSIFIED C UL US 20VM Medical Equipment With respect to electrical hazards only in accordance with UL60601-1, CAN/CSA C22.2 No. 601.1, IEC60601-1, IEC60601-2-7
Maximum power technique	80 kV, 500 mA
Line regulation	+/- 7%
Duty Cycle	1%
kV Selection	40 to 125 kV in increments of 1 kV
kV Accuracy	Indicated value +/- 5%
mAs Selection	1 - 500 mAs, increments of 1.2 x previous value
mAs Accuracy	+/- (.6 mAs + 5% of indicated value)
mA Selection	25 - 500 mA
mA Accuracy	Indicated value +/- 10%
Time Selection	10 milliseconds to 6 seconds, in 77 steps
Time Accuracy	+/- 10%
Technique Factor Max Line Current	80 kV, 500 mA, 200 mS
Regulatory	Meets the requirements of 21 CFR Sub Chapter J.

Configuration: Model Anthem 32-500; 32 kW, 500mA, 3-phase

General	
Input power	208/240/380/480 VAC, 3-phase, 1 A Continuous, 158 A/136 A/86 A/68 A Momentary, 50/60 Hz
Output power	32 kW, 500 mA For lock: 24VDC, 4A For manual collimator: 24VAC, 8A, 50/60 HZ, 10% Duty For bucky: 120VAC, 1A, 50/60 HZ Room in use light (for X-ray Indicator): Normally open relay contact, max contact rating 10A at 240VAC
Mode of Operation	Continous with intermittent loading (1% duty cycle)
Temperature Limits	Transit/Storage — Operating – 40° F to +158° F — +50° F to +95° F – 40° C to +70° C — +10° C to +35° C
Relative Humidity Limits	Transit/Storage — Operating 10% to 100% — 10%-80% Non-Condensing
Atmospheric Limits	14.5 inHg to 30.74 inHg 500 hPa to 1060 hPA
Weight	368 lb. (including shipping crate)
Degree of protection against ingress of water	Ordinary
Certifications	Medical Equipment With respect to electrical hazards only in accordance with UL60601-1, CAN/CSA C22.2 No. 601.1, IEC60601-1, IEC60601-2-7
Maximum power technique	64 kV, 500 mA
Line regulation	+/- 7%
Duty Cycle	1%
kV Selection	40 to 125 kV in increments of 1 kV
kV Accuracy	Indicated value +/- 5%
mAs Selection	1 - 600 mAs, increments of 1.2 x previous value
mAs Accuracy	+/- (.6 mAs + 5% of indicated value)
mA Selection	25 - 500 mA
mA Accuracy	Indicated value +/- 10%
Time Selection	10 milliseconds to 6 seconds, in 77 steps
Time Accuracy	+/- 10%
Technique Factor Max Line Current	64 kV, 500 mA, 100 ms
Regulatory	Meets the requirements of 21 CFR Sub Chapter J.

Configuration: Model Anthem 40-600; 40 kW, 600mA, 3-phase

General	
Input power	208/240/380/480 VAC, 3-phase, 1 A Continuous, 161 A/142 A/90 A/72 A Momentary, 50/60 Hz
Output power	40 kW, 600 mA For lock: 24VDC, 4A For manual collimator: 24VAC, 8A, 50/60 HZ, 10% Duty For bucky: 120VAC, 1A, 50/60 HZ Room in use light (for X-ray Indicator): Normally open relay contact, max contact rating 10A at 240VAC
Mode of Operation	Continous with intermittent loading (1% duty cycle)
Temperature Limits	Transit/Storage — Operating – 40° F to +158° F — +50° F to +95° F – 40° C to +70° C — +10° C to +35° C
Relative Humidity Limits	Transit/Storage — Operating 10% to 100% — 10%-80% Non-Condensing
Atmospheric Limits	14.5 inHg to 30.74 inHg 500 hPa to 1060 hPA
Weight	368 lb. (including shipping crate)
Degree of protection against ingress of water	Ordinary
Certifications	CLASSIFIED C UL US 20VM Medical Equipment With respect to electrical hazards only in accordance with UL60601-1, CAN/CSA C22.2 No. 601.1, IEC60601-1, IEC60601-2-7
Maximum power technique	100 kV, 400 mA
Line regulation	+/- 7%
Duty Cycle	1%
kV Selection	40 to 125 kV in increments of 1 kV
kV Accuracy	Indicated value +/- 5%
mAs Selection	1 - 600 mAs, increments of 1.2 x previous value
mAs Accuracy	+/- (.6 mAs + 5% of indicated value)
mA Selection	25 - 600 mA
mA Accuracy	Indicated value +/- 10%
Time Selection	10 milliseconds to 6 seconds, in 77 steps
Time Accuracy	+/- 10%
Technique Factor Max Line Current	100 kV, 400 mA, 250 ms
Regulatory	Meets the requirements of 21 CFR Sub Chapter J.
Equipment not suitable for use in the presence of flammable anesthetic mixtures with air, oxygen or nitrous oxide.	
No user serviceable parts.	

Configuration: Model Anthem 50-650; 50 kW, 650mA, 3-phase

General	
Input power	208/240/380/480 VAC, 3-phase, 1 A Continuous, 200 A/176 A/110 A/88 A Momentary, 50/60 Hz
Output power	50 kW, 650 mA For lock: 24VDC, 4A For manual collimator: 24VAC, 8A, 50/60 HZ, 10% Duty For bucky: 120VAC, 1A, 50/60 HZ Room in use light (for X-ray Indicator): Normally open relay contact, max contact rating 10A at 240VAC
Mode of Operation	Continous with intermittent loading (1% duty cycle)
Temperature Limits	Transit/Storage — Operating – 40° F to +158° F — +50° F to +95° F – 40° C to +70° C — +10° C to +35° C
Relative Humidity Limits	Transit/Storage — Operating 10% to 100% — 10%-80% Non-Condensing
Atmospheric Limits	14.5 inHg to 30.74 inHg 500 hPa to 1060 hPA
Weight	368 lb. (including shipping crate)
Degree of protection against ingress of water	Ordinary
Certifications	Medical Equipment With respect to electrical hazards only in accordance with UL60601-1, CAN/CSA C22.2 No. 601.1, IEC60601-1, IEC60601-2-7
Maximum power technique	100 kV, 500 mA
Line regulation	+/- 7%
Duty Cycle	1%
kV Selection	40 to 125 kV in increments of 1 kV
kV Accuracy	Indicated value +/- 5%
mAs Selection	1 - 600 mAs, increments of 1.2 x previous value
mAs Accuracy	+/- (.6 mAs + 5% of indicated value)
mA Selection	25 - 650 mA
mA Accuracy	Indicated value +/- 10%
Time Selection	10 milliseconds to 6 seconds, in 77 steps
Time Accuracy	+/- 10%
Technique Factor Max Line Current	100 kV, 500 mA, 200 ms
Regulatory	Meets the requirements of 21 CFR Sub Chapter J.

AEC Specifications:

General	
Post Exposure Indicator	Digital Readout on mAs
Film Screen Selection	Six Different Film-Screen Combinations
AEC Density Control	13 Steps from 0.8 to 2.0
Fault Indicator	For Backup mAs and Generator Termination
Default Termination	Operator Selectable
kV Compensation	Three Calibration Points, 60, 90, 110 kV
SID Range	36 to 72 Inches (91.44 cm to 182.88 cm)
Ion Chamber/Preamplifier: Ion Chamber Voltage: Input Voltage: Sensitivity: Maximum Output: Linearity:	 200 VDC +/-5% Internally Generated +12VDC, -12VDC Film Screen Combinations 100-500 8.5 VDC +/-5%
Field Sizes: Center Field: Left/Right:	 2” x 4.4” (5.08 cm x 11.17 cm) 2.2” x 3.6” (5.58 cm x 9.14 cm)

D.H.H.S. Compliance

The Anthem High Frequency x ray generator and its associated accessories are certified components conforming to all applicable radiation performance standards as outlined by the Food and Drug Administration, Code of Federal Regulations, Title 21, Subchapter J, at the time of manufacture.

Dimensions

Control/display	Incorporated into generator
Main Chassis	10.4" x 16.75" x 3.06" (incorporated into the rack cabinet) (26.4 cm x 42.5 cm 7.7 cm)

Regulatory Conformance

Complies with FDA radiation performance standards under 21 CFR subchapter J, in effect at the date of manufacture.

1.6 System weights

Single-phase Anthem generator (including shipping crate): 344 lb.

3-phase Anthem generator (including shipping crate): 368 lb.

Component	Weight
Upper Cabinet - Power Module (1-phase / 3-phase)	126 lb. / 86.0 lb.
Control Console	5.75 lb.
Control Console Floor Stand	24.0 lb.
Control Console Wall Mounting Bracket	1.2 lb.
Tank	107 lb.

Table 1-1: System and components weights

1.7 Compatibility listing

The output of this generator is compatible with the following certified components.

X-ray Tube Assemblies

Varian

RAD 8 - 1.0 X 2.0
RAD 13 - 1.0 X 2.0
RAD 14 - 0.6 X 1.2
RAD 16 - 1.0 X 2.0
RAD 21 - 0.6 X 1.2
RAD 25 - 1.0 X 2.0
RAD 40 - 0.6 X 1.2
RAD 56 - 0.6 X 1.2
RAD 60 - 0.6 X 1.2
RAD 68 - 0.6 X 1.2
RAD 68 - 1.0 X 2.0
RAD 74 - 0.6 X 1.5

Toshiba

DR-3724H - 0.6 X 1.2
UX-51H39/E7239 1.0 X 2.0
UX-51H42/E7242 0.6 X 1.5
UX-E7255
UX-E7884

Eimac

A119 - 1.0 X 2.0
A132 - 0.6 X 1.2
A272 - 0.3 X 0.7
A292 - 0.6 X 1.2

Dunlee

DU303M - 1.0 X 2.0
PX-1312 - 0.6 X 1.2
PX-1429 - 0.6 X 1.2
PX-1436 - 0.6 X 1.2

Comet

DX39H - 0.6 X 1.5

Consult Del Medical Imaging technical support for tubes that are not listed.

1.8 Abbreviations

%	Percent
AWG	American Wire Gauge
Btu/hr	British Thermal Unit/hour
° C	Degree Celsius
CE	Communautés Européennes
cm	Centimeter
C.R.S.	Cold Rolled Steel
° F	Degree Fahrenheit
ga	Gauge
hPa	Hecto Pascal
inHg	Inches Mercury
Kg	Kilogram
Lb	Pound
M	Meter
max.	Maximum
min.	Minimum
mm	Millimeter
PBL	Positive Beam Limitation
Sq/Ft	Square Foot
Sq/M	Square Meter
UL	Underwriters Laboratories

1.9 Optional Accessories

Control Console Wall Mounting Bracket

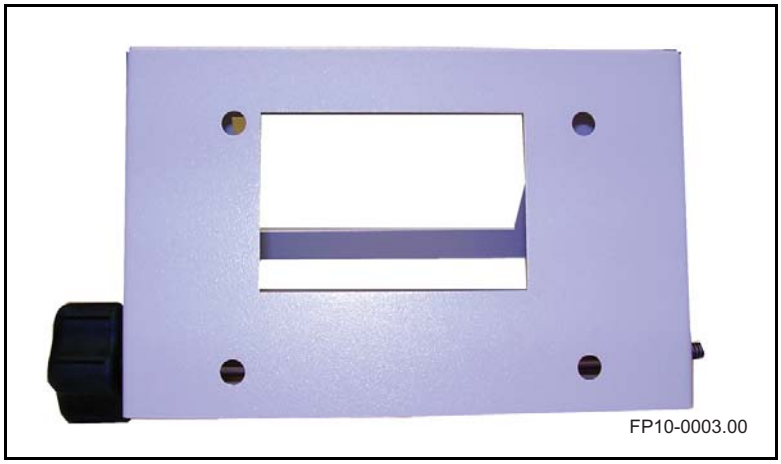

Figure 1-7. Control Console Wall Mounting Bracket

Control Console Floor Stand

Figure 1-8. Control Console Floor Stand

1.10 Theory of Operation

The human-machine interface between the operator and the Anthem X-ray generator takes place at the operator's console.

The Console Display Board provides visible selection data to the operator through the Liquid Crystal Display. The operator selects from the available technique options, using the membrane keyboard on the face of the operator's console. Keyboard entries are input to the Console Board (124-5133G1), and the results are updated and displayed on the LCD.

The communication between the Console board (124-5133G1) and the Main Inverter board (124-5132G1) is bi-directional through a parallel interface cable from connector J5 on Console board to connector J13 on the Main Inverter board (124-5132G1) as well as hard wired lines for Prep and Exposure signals.

Selected technique parameters are sent from the Console board to the Main Inverter board (124-5132G1) through an isolated CAN Bus Communication. The data stream is received and decoded at the Main Inverter board (124-5132G1) for several D/A converters that develop reference voltages for kV, Filament Preheat, mA, selections, such as Buckys, focal spots, commutation capacitors, and other accessories, such as photo timing, High Speed Starter, and Tomo devices.

Return communication from the Main Inverter board (124-5132G1) to the operator's console such as kV, mA, and Filament faults is accomplished with a CAN Bus Communication.

Communication between Main Inverter board to the Power/Relay board, Filament board, IPM driver board, Room Interfacing board uses a combination of wire harnesses and edge connectors.

Control of kV, mA, and Filament Preheat levels begins with analog reference voltages, decoded by D/A converters on the Main Inverter board (124-5132G1), which are then sent out to the kV Control Circuit, mA Control Circuit, Filament/Rotor control circuit.

1.10.1 Prep/Prep Ready Cycle

The PREP REQUEST from Console board is sent to Main Inverter board. The PREP Request then activates the relay K9 on Power/Relay board to turn on the rotor. It also turns on the filament driver. U30 on Main Inverter board will monitor the ROTOR READY and all other Fault signals. If there are no fault signal and ROTOR READY is OK, all analog reference voltages (for KV, mA, Fill) will be sent to associated circuitries. Prep LED will be turned ON and the generator is armed for an exposure.

1.10.2 Exposure Functions

The EXPOSE REQUEST from Console is sent to Main Inverter board. The EXPOSURE request then turns on the Main Contactor. After 1ms delay, KV enable will be turned ON. The KV driver signal from U5 on Main Inverter board will be sent to IPM driver board to drive the Inverter. Any fault condition present on the Main Inverter board will inhibit or terminate the EXPOSE Command. Any fault condition, open interlock, or STOP signal will terminate both the EXPOSE and PREP Commands.

1.10.3 kV Control Functions

The Inverter Power Supply is a three-phase full wave rectifier circuit, fed by the output of the line-matching transformer, which develops approximately 400 VDC across the filter capacitors.

kV settings from the Operator's Console are decoded on the Main inverter board and used to provide the kV reference voltage to the kV control circuit. Based upon the power requirements of the selected exposure technique, different parallel configurations of the capacitors are used to vary the frequency of the high voltage primary switching circuit, providing optimum operation for various power output levels.

The PWM chip U5 on Main Inverter board will send the KV drive signal to IPM driver board 124-5130G1 which will drive the IPM1 and IPM2 to generate the High Frequency AC input to the H.V. tank.

On the Main Inverter board, the feedback voltages from H.V. tank are summed, filtered, and sent to PWM chip U5 to adjust the pulse width depending on the KV feedback resulting in closed loop regulation of the high-voltage being delivered to the x-ray tube. Whenever the kV feedback falls beneath the kV reference voltage threshold, the pulse width is changed until the kV meets or exceeds the reference voltage. The Feedback voltages are also sent to a pair of window comparators that are used to detect under voltage or over voltage conditions. An error that is detected in either window comparator latches the fault condition, shutting off the PWM U5 driver and sending a kV fault signal to the Console board via Can Bus. The operator must reset the machine in order to clear this fault.

1.10.4 mA/Filament Control Functions:

The mA or mAs settings from the Operator's Console are decoded on the Main inverter board and used to provide the mA and Filament reference voltage to the mA and Filament control circuit. Based upon the power requirements of the selected exposure technique, different parallel configurations of the capacitors are used to vary the frequency of the high voltage primary switching circuit, providing optimum operation for various power output levels.

The PWM chip U13 on Main Inverter board sends the drive signal to filament board 124-5131G1 to drive Q1 and Q2 via 2 OPTO OC2 and OC3 to generate the High Frequency AC input to X-ray Tube filament.

On the Main Inverter board, the mA feedback voltage from H.V. Tank is filtered, and sent to PWM chip U5 to adjust the pulse width depending on the mA feedback resulting in closed loop regulation of the filament current being delivered to the x-ray tube to stabilize the mA. Whenever the mA feedback falls beneath the kV reference voltage threshold, the pulse width is change until the mA meets or exceeds the reference voltage. The mA Feedback voltage is also sent to a pair of window comparators that are used to detect high mA. An error that is detected in either window comparator latches the fault condition, shutting off the PWM U13 driver and sending a mA high fault signal to the Console board vie Can Bus. The operator must reset the machine in order to clear this fault.

1.10.5 Rotor Control:

The Prep signal from Console turns on relay K9 on the Power/relay board to supply power to rotor. When prep switch is pressed, Rotor Boost signal is sent to Filament board to start the rotor boost. After 1.5 seconds, the Rotor Run signal will be sent to filament board to generate the pulse which will control the SSR. The SSR will turn the Rotor and maintain the speed at 3400 RPM.

Installation

2

2.1 Pre-installation

2.1.1 Tools Required

- Adjustable-end wrench
- Medium phillips screwdriver
- Pallet hoist
- Power drill and masonry bit (size determined by installer)
- Set of nut drivers
- Small flat-tip screwdriver
- Standard tool kit for installing X-ray systems
- True RMS volt/multimeter

Caution

Two people are required to perform this installation procedure.

2.1.2 X-ray Room Pre-planning

Consult with the client and/or client physical plant superintendant prior to beginning installation to verify that the site has sufficient power and utility, Local Area Network, infrastructure.

Use shipping order and any statement of work, job orders, or any client room drawings, special written or unwritten requirements before beginning installation, to determine site-specific requirements and client requests, or room workflow considerations that will need to be accommodated in the installation.

Minimum Space Requirements

Refer to Figure 1-6 on page 1-7 for details.

Power Requirements

An initial evaluation of the incoming line should have been performed during the pre-sales site survey, prior to placing the actual order to purchase the X-ray generator from Del Medical Inc. At that time, the physical configuration of the generator (i.e. Single Phase or Three Phase line input) should have been made.

The installer must now ensure that the configuration is accurate and that the correct parts have been received.

Warning

Lethal voltages may be present!

These instructions are intended for use by qualified installers only.

Never work on energized circuits during this installation unless specifically instructed to do so.

- All wiring up to the Anthem power module input terminals is to be furnished by the customer.
- All electrical wiring must conform to state and/or local electrical codes. Aluminum wire is unacceptable for use in wiring.

Wiring Requirements

Caution

Attempts to attach accessory items, other than what is described in this manual may damage circuitry. Aluminum wire is unacceptable for use in wiring. All wiring MUST be copper.

Generator Model / Incoming Line Voltage	Dist. XFMR or Dedicated Energy Source	Minimum Copper Wire Size					Min. Switch, Fuse, or Beaker Rating	Max. Momentary Current Draw	Apparent Mains Resistance
		Distance in Feet from Distribution Point to Disconnect Panel			Ground	Disconnect to Generator (15' max.)			
		50' (15m)	100' (30m)	200' (60m)					
30kW, 400mA 208VAC 1 phase	50 kVA	#0 50mm^2	#00 95mm^2	300mcm 150mm^2	#6 16mm^2	#6 16mm^2	110 A	210 A	0.16 Ω
30kW, 400mA 240VAC 1 phase	50 kVA	#0 50mm^2	#00 95mm^2	300mcm 150mm^2	#6 16mm^2	#6 16mm^2	100 A	180 A	0.17 Ω
30kW, 500mA 208VAC 1 phase	50 kVA	#0 50mm^2	#00 95mm^2	300mcm 150mm^2	#6 16mm^2	#6 16mm^2	120 A	226 A	0.12 Ω
30kW, 500mA 240VAC 1 phase	50 kVA	#1 50mm^2	#0 50mm^2	#000 95mm^2	#6 16mm^2	#6 16mm^2	100 A	195 A	0.13 Ω
40kW, 500mA 208VAC 1 phase	50 kVA	#0 50mm^2	#00 95mm^2	300mcm 150mm^2	#6 16mm^2	#6 16mm^2	150 A	256 A	0.13 Ω
40kW, 500mA 240VAC 1 phase	50 kVA	#1 50mm^2	#0 50mm^2	#000 95mm^2	#6 16mm^2	#6 16mm^2	120 A	222 A	0.14 Ω
32kW, 500mA 208VAC 3 phase	50 kVA	#4 25mm^2	#0 50mm^2	#00 95mm^2	#6 16mm^2	#6 16mm^2	80 A	158 A	0.11 Ω
32kW, 500mA 240VAC 3 phase	50 kVA	#4 25mm^2	#0 50mm^2	#00 95mm^2	#6 16mm^2	#6 16mm^2	70 A	136 A	0.15 Ω
32kW, 500mA 380VAC 3 phase	50 kVA	#6 16mm^2	#2 35mm^2	#0 50mm^2	#6 16mm^2	#6 16mm^2	50 A	86 A	0.18 Ω
32kW, 500mA 480VAC 3 phase	50 kVA	#6 16mm^2	#4 25mm^2	#0 50mm^2	#6 16mm^2	#6 16mm^2	50 A	68 A	0.24 Ω
40kW, 600mA 208VAC 3 phase	65 kVA	#1 50mm^2	#0 50mm^2	#00 95mm^2	#6 16mm^2	#6 16mm^2	100 A	161 A	0.1 Ω
40kW, 600mA 240VAC 3 phase	65 kVA	#2 35mm^2	#0 50mm^2	#00 95mm^2	#6 16mm^2	#6 16mm^2	80 A	142 A	0.12 Ω
40kW, 600mA 380VAC 3 phase	65 kVA	#2 35mm^2	#1 50mm^2	#0 50mm^2	#6 16mm^2	#6 16mm^2	50 A	91 A	0.13 Ω
40kW, 600mA 480VAC 3 phase	65 kVA	#4 25mm^2	#1 50mm^2	#0 50mm^2	#6 16mm^2	#6 16mm^2	50 A	72 A	0.13 Ω
50kW, 650mA 208VAC 3 phase	65 kVA	#1 50mm^2	#0 50mm^2	#00 95mm^2	#6 16mm^2	#6 16mm^2	100 A	200 A	0.10 Ω
50kW, 650mA 240VAC 3 phase	65 kVA	#2 35mm^2	#0 50mm^2	#00 95mm^2	#6 16mm^2	#6 16mm^2	90 A	176 A	0.13 Ω
50kW, 650mA 380VAC 3 phase	65 kVA	#2 35mm^2	#1 50mm^2	#0 50mm^2	#6 16mm^2	#6 16mm^2	60 A	110 A	0.16 Ω
50kW, 650mA 480VAC 3 phase	65 kVA	#4 25mm^2	#1 50mm^2	#0 50mm^2	#6 16mm^2	#6 16mm^2	50 A	88 A	0.17 Ω

Note!
The minimum wire sizes listed above have been selected for the maximum wire resistance allowed at maximum momentary full load current. To meet National Electric Code Specifications, you must select a fuse or circuit breaker having an amperage rating of at least 50% of the generator's peak current demand.

2.1.3 System Content

Your shipment will arrive in a box on a shipping pallet. The box will contain the upper and lower cabinet and the operator control console (inside the lower cabinet). Save the boxes until the generator is inspected for shipping damage and is up and operating.

2.1.4 Unpacking

1. Move pallet to approximate position where generator will be installed.
2. Cut plastic straps. Remove straps and top cover.
3. Lift off outer box shell.
4. Remove shrink wrapping from around generator.
5. Slightly angle the generator and gently “walk” the generator off of the pallet on to the floor at it’s final location.

2.2 Installation

Before starting the installation, study the cable index on next page to get familiar with the interconnections between the Anthem and other equipment.

2.2.1 Cable Index

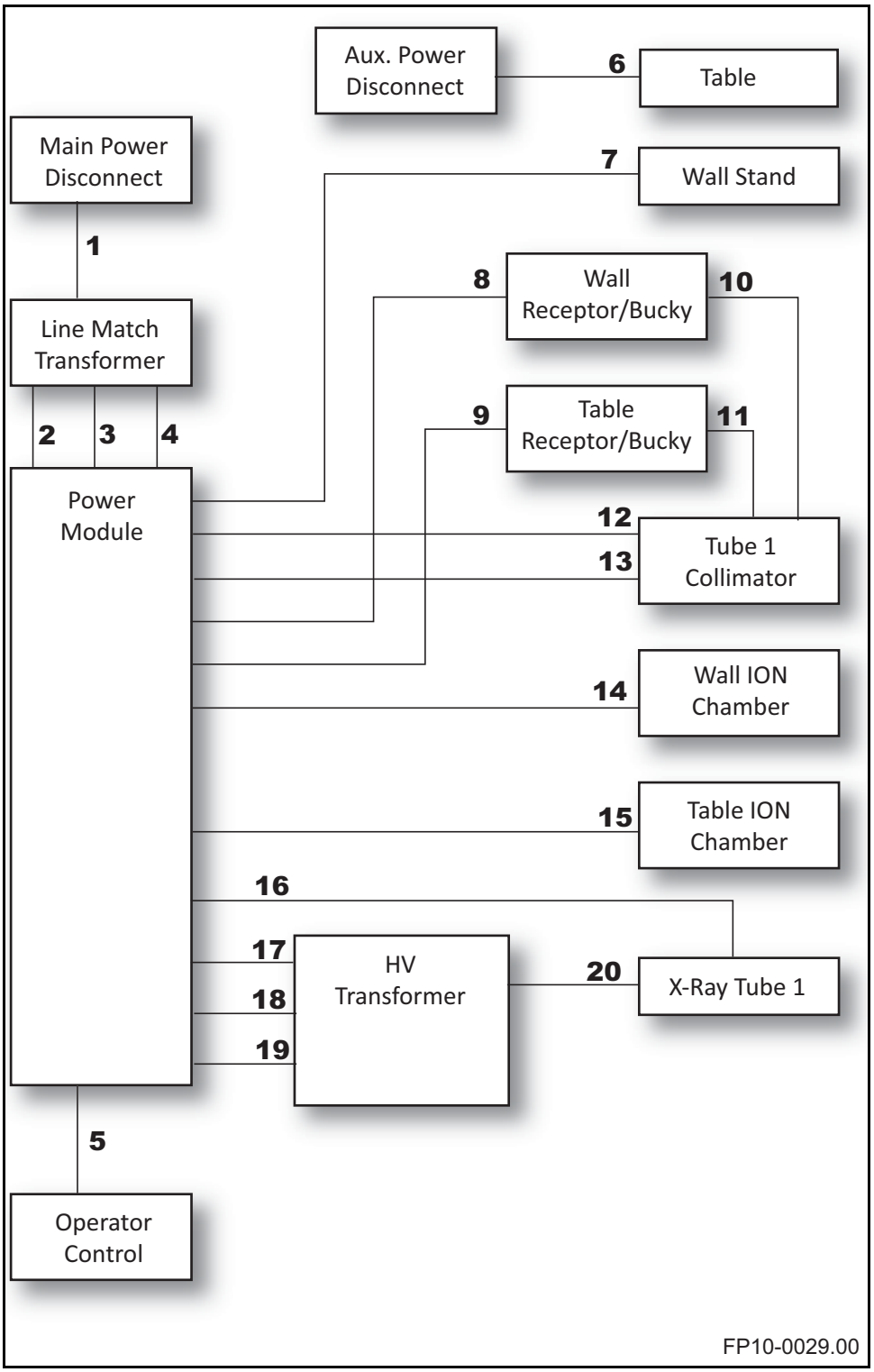

Figure 2-1. Cable Index

Cable Index			
Cable #	**Description**	**Length**	**Part #**
1	Main Power		643-5012P1(Single Phase) 643-5013P1 (Three Phase)
2	High Power Line Match to Power Module – Three Phase	6 ft. (1.8 m)	126-5291G1
3	Low Power Line Match to Power Module (3-phase)	6 ft. (1.8 m)	126-5292G3
4	Low Power Line Match to Power Module (Single Phase)	3 ft. (0.9 m)	126-5295G1
5	Operator Control Cable	45 ft. (13.7 m)	126-5174G1
6	Table Power		(not supplied)
7	Wall Stand Power	40 ft. (12.2 m)	
8	Wall Bucky Cable	20 ft. (6.1 m)	5500-2299
9	Table Bucky Cable	20 ft. (6.1 m)	5500-2399
10	Wall Cassette Size Sense Cable	40 ft. (12.2 m)	(supplied with wall bucky)
11	Table Cassette Size Sense Cable	40 ft. (12.2 m)	(supplied with table bucky)
12	Collimator Power		(supplied with collimator)
13	Collimator Control Cable	40 ft. (12.2 m)	(supplied with collimator)
14	Wall Ion Chamber Cable	45 ft. (13.7 m)	(supplied with ion chamber)
15	Table Ion Chamber Cable	45 ft. (13.7 m)	(supplied with ion chamber)
16	Stator Cable	40 ft. (12.2 m)	(supplied with x-ray tube)
17	kV/mA Feedback Cable	6 ft. (1.8 m)	126-0177G2
18	HV Primary Cable	6 ft. (1.8 m)	126-5290G1
19	Filament Cable	6 ft. (1.8 m)	126-5294G1
20	High Tension Cables (two)	15 ft. (4.6 m) 20 ft. (6.1 m) 25 ft. (7.6 m) 30 ft. (9.1 m) 35 ft. (10.7 m) 40 ft. (12.2 m) 50 ft. (15.2 m) 60 ft. (18.3 m)	Claymount 10538 Claymount 10539 Claymount 10540 Claymount 10541 Claymount 10542 Claymount 10543 Claymount 10545 Claymount 10547

Table 2-1: List of interconnection cables for a typical X-ray system.

Cable Index Notes

- Observe local codes with respect to wire size and grounding requirements
- The Generator requires a dedicated power line
- Use Copper wire only, aluminum wire is unacceptable

2.2.2 Connection of Incoming Main Power Cable

For Single Phase Generators

Warning

Make sure that the power to the main power cable is turned off.

1. Route the main power cable to where the generator is being installed.
2. Remove the lid on the back of the generator power module. Retain all hardware.
3. Unscrew and retain the ground point (1 in Figure 2-2) nut and temporarily disconnect the already connected ground wires as shown below.

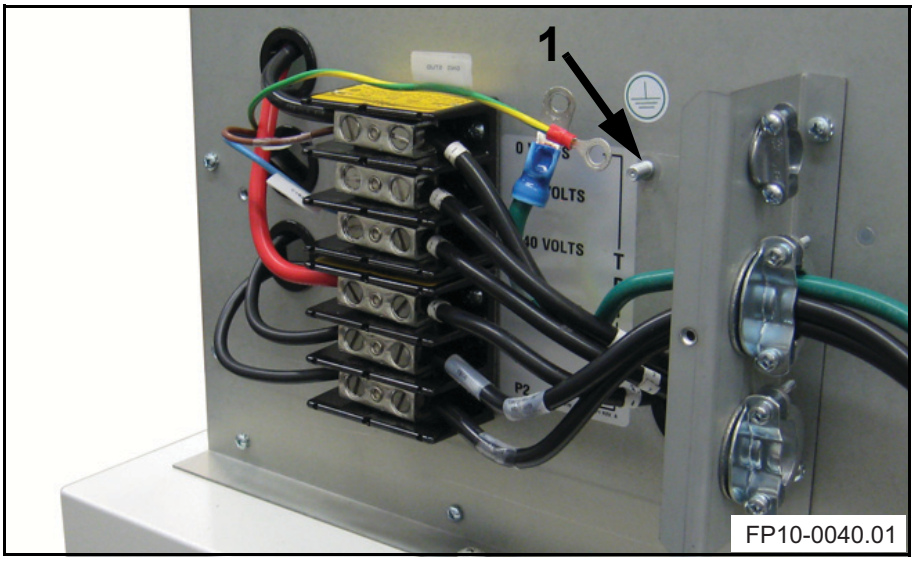

Figure 2-2. Terminal TB1 and ground stud on the back of the generator power module.

4 Route the main power cable through the cable clamp (1 in Figure 2-3).

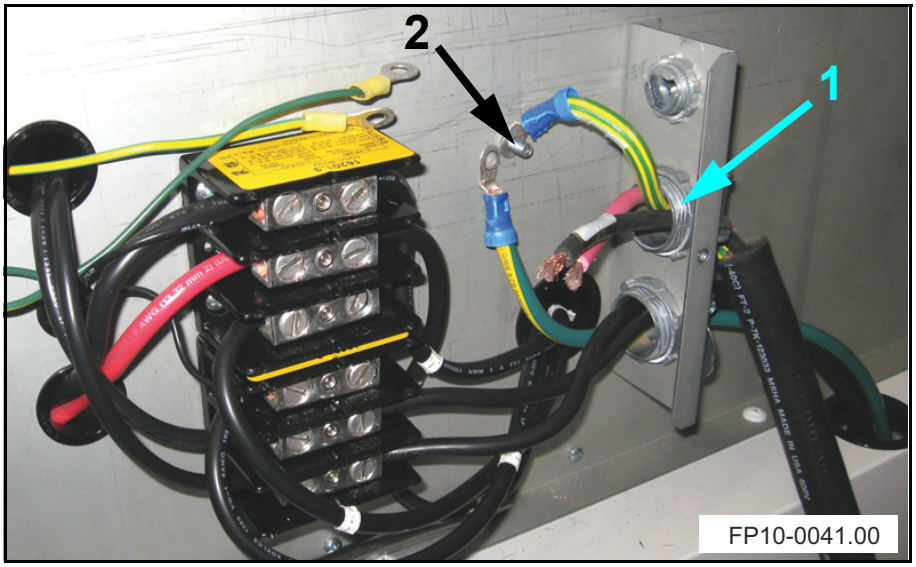

Figure 2-3. Wires from main power cable routed through the cable clamps.

5 Connect the ground wire from the main power cable to the ground pin (2 in Figure 2-3). Thereafter connect the other previously disconnected ground wires and fix them in place with the nut (1 in Figure 2-4).

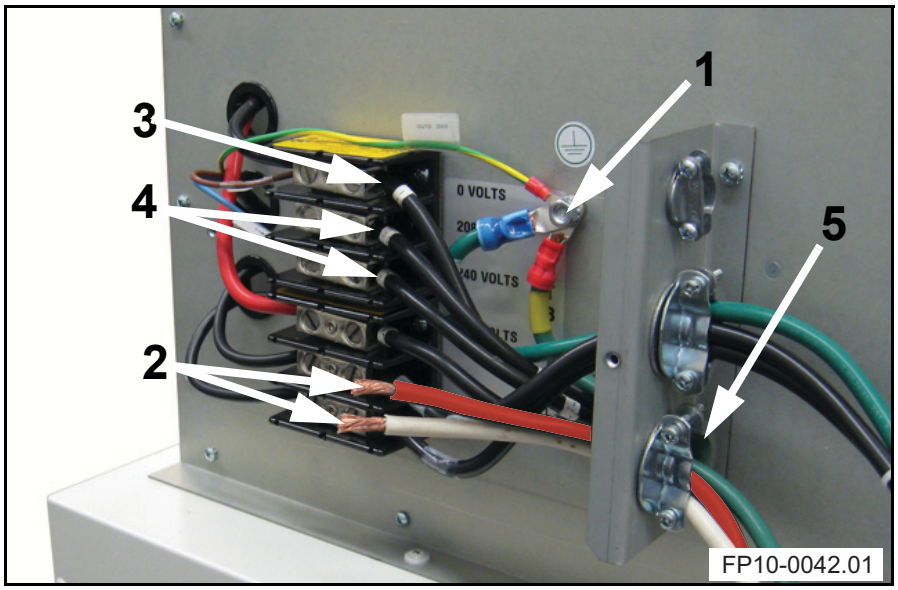

Figure 2-4. Ground wires connected. Main power cable ground wire flush to the power module sheet metal.

6 Connect one of the other two wires from the main power cable (2 in Figure 2-4) to the 0 Volt terminal (3).

7 Verify the power rating of the main power supply and connect the third wire from the main power cable to the matching 208 or 240 Volt terminal (4). Refer to Table 2-2 for correct voltage.

Single phase power supply		
TB1	208-220 Volts	230-240 Volts
1 (0V)	Wire 1	Wire 1
2 (208V)	Wire 2	-
3 (240V)	-	Wire 2
4 (290V)	-	-
5 (P1)	-	-
6 (P2)	-	-

Table 2-2: Connection of incoming single phase main power supply cable to correct terminal on TB1.

Note: For nominal single-phase voltage of 220 volts, connect to 208 tap.

8 Secure the main power cable by tightening the cable clamp (5 in Figure 2-4).

9 Remount the lid.

For 3-phase Generators

Warning

Make sure that the power to the main power cable is turned off.

1 Unscrew four front panel screws (1 in Figure 2-5) and remove front panel (2).

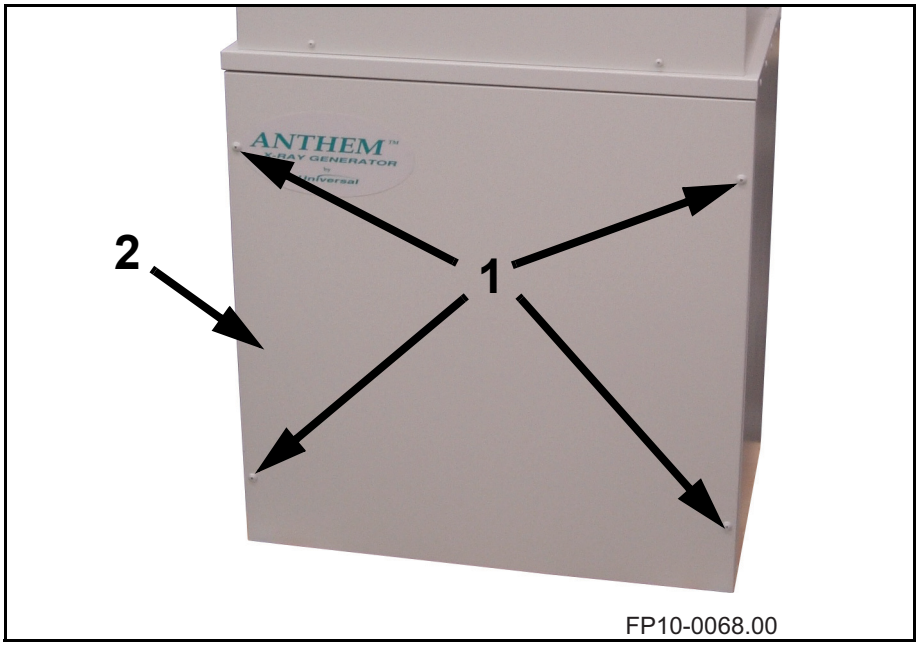

Figure 2-5. Front Panel Removal

2 Route the main power cable (1 in Figure 2-6) to the generator and through the cable clamp (2) on the back of the lower cabinet (3).

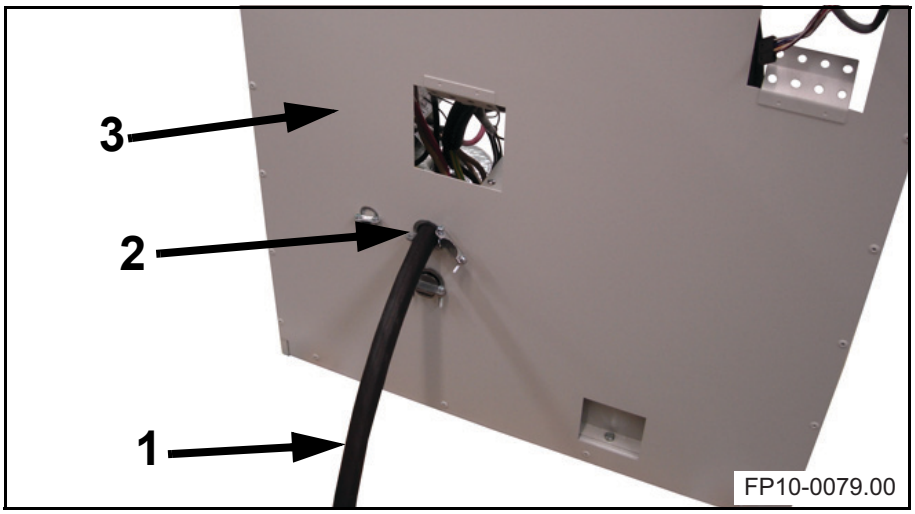

Figure 2-6. Main power cable routed through the back of the generator.

3 Connect the ground wire (1 in Figure 2-7) to the ground bolt (2) on the bottom of the lower cabinet. There are two nuts (3) on the ground pin, when there are three or more ground wires they need to be separated to allow for proper and secure connection.

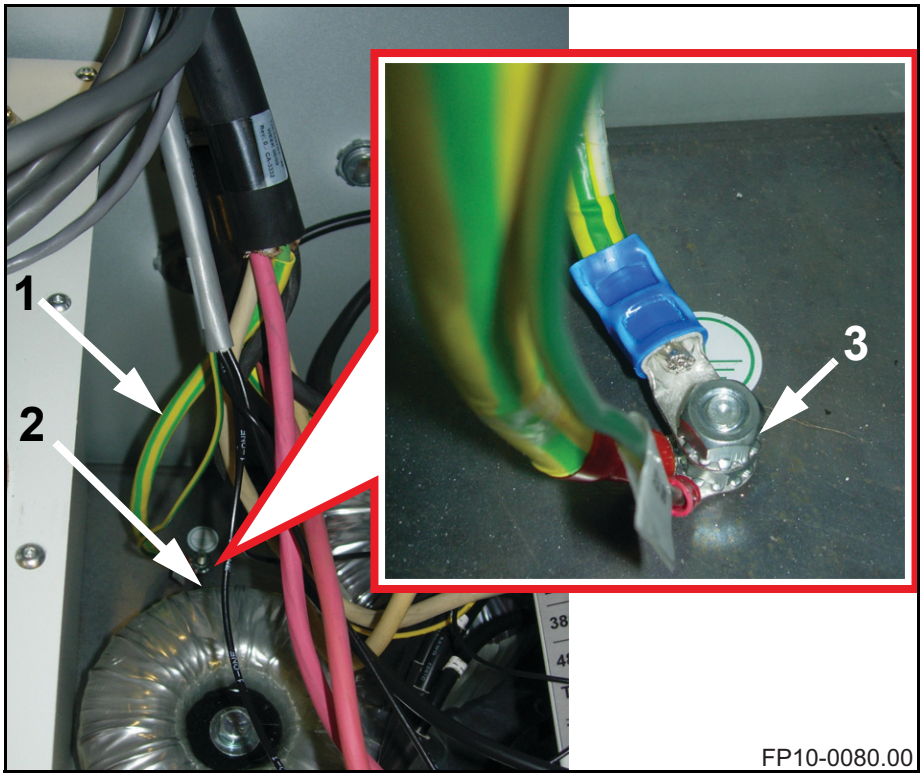

Figure 2-7. Terminal TB1 and ground stud at the bottom of the lower cabinet.

4 Verify the level of incoming power.

5 Connect one incoming line (1 in Figure 2-8) per TB1, TB2, and TB3 at the socket indicating the matching power level of incoming power.

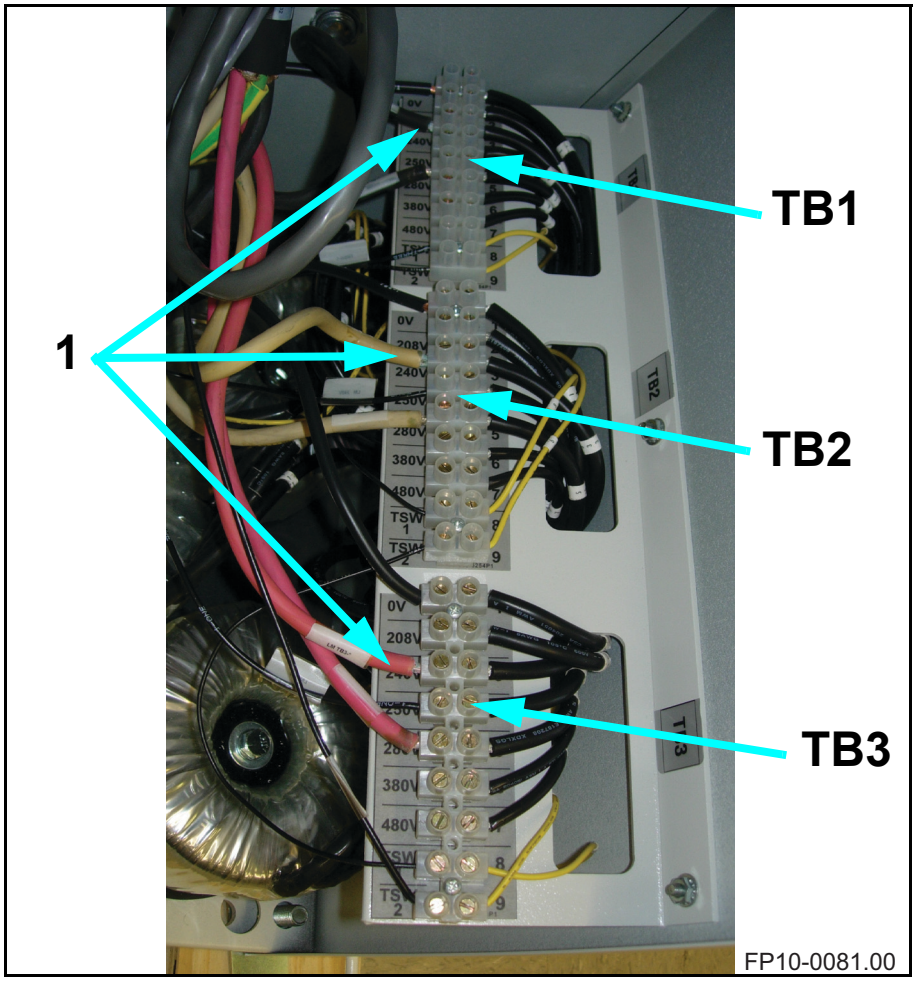

Figure 2-8. Connection of incoming lines.

Note
If the incoming power is 220 V:
- use sockets marked 208 V for the incoming lines.

If the incoming power is 230 V:
- use sockets marked 240 V for the incoming lines.

2.2.3 Connecting the generator to other x-ray room components

Connecting Tube Rotor Cable and Image Receptor Cables to the Generator

The rotor and image receptor cables are to be connected to the room interface board on the front of the power module.

1 Unscrew eight upper cabinet cover screws (two in front and three on each side) and lift off cover (1 in Figure 2-9).

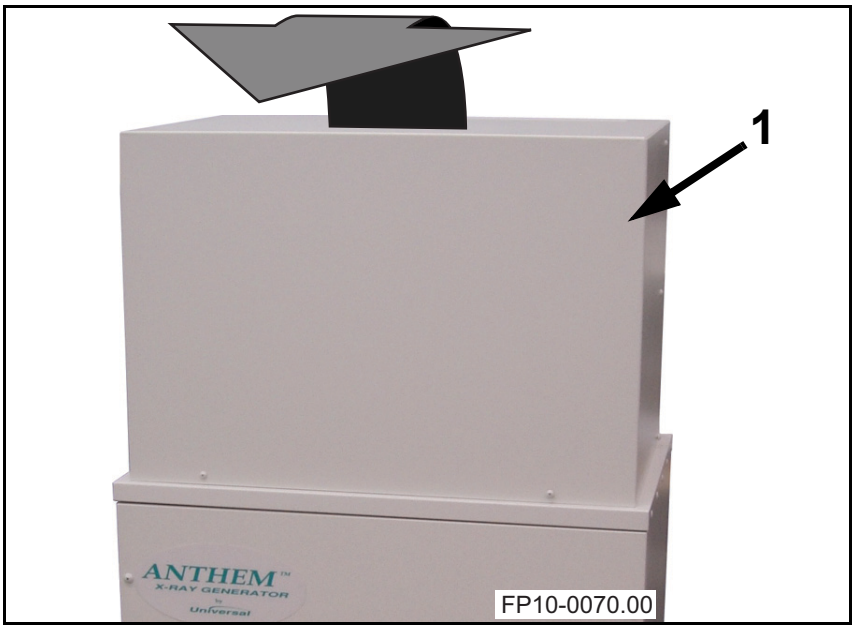

Figure 2-9. Removal of Upper Cabinet Cover

2 Route the cables from the tube and image receptor(s) through the holes (1 in Figure 2-10) in the cable routing bracket on the side of the power module.

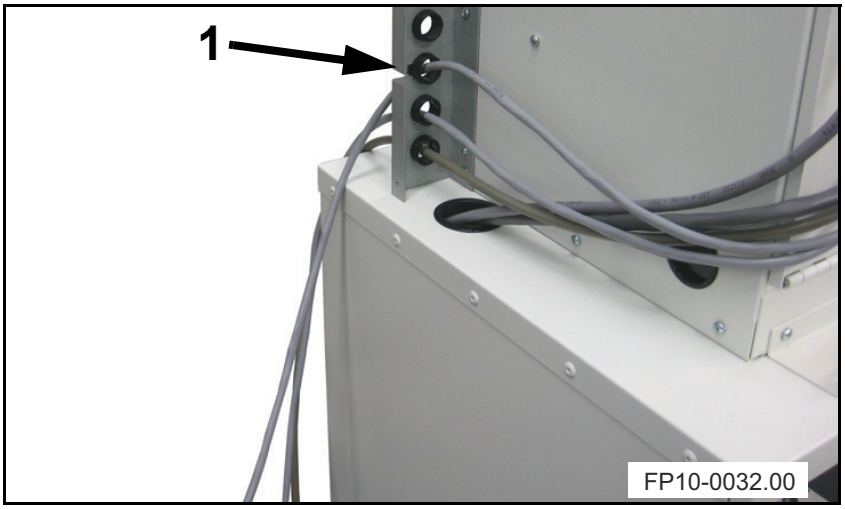

Figure 2-10. Cable routing through power module's cable routing bracket

3 Route the cables through the cable clamps (1 in Figure 2-11) on the front of the power module.

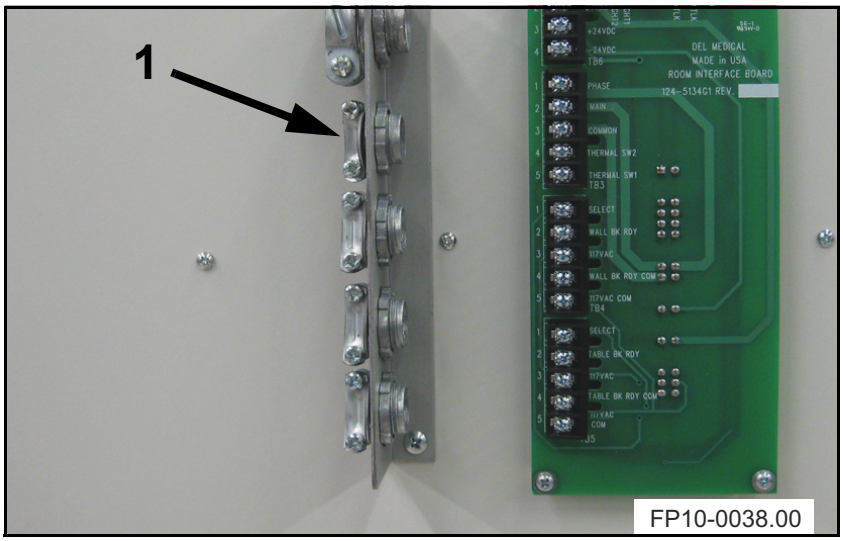

Figure 2-11. Cable routing through power module's front cable clamps

4 Connect the bucky and rotor cables. Refer to Table 2-3 on page 2-17 and Figure 2-13 on page 2-17 for different wall bucky options, to Table 2-4 on page 2-18 and Figure 2-14 on page 2-18 for different table bucky options and to Figure 2-15 on page 2-19 for rotor cable connections.

Warning

Make sure to connect ground cables to the ground screw above the board (1 in Figure 2-12).

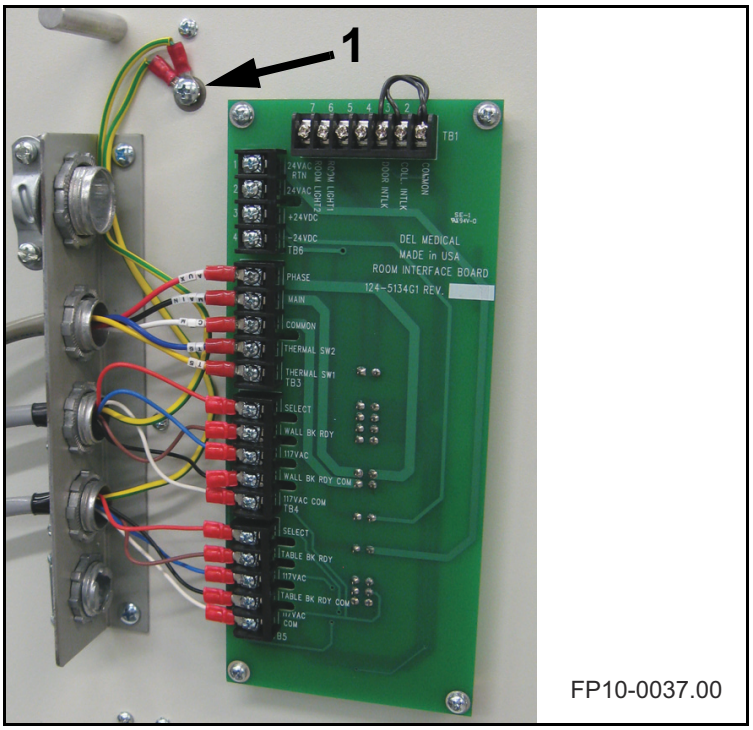

Figure 2-12. Rotor and image receptor cables connected to earth and terminal blocks on room interface board on the front of the power module.

Wall Bucky Connections

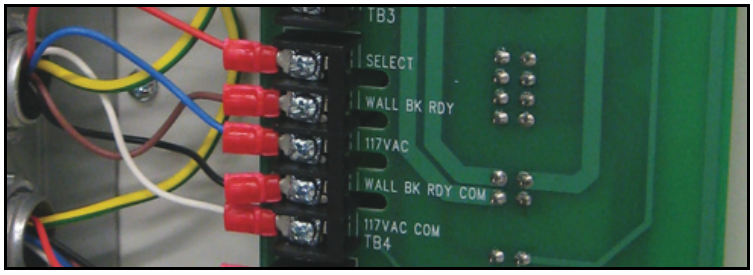

Figure 2-13. Wall image receptor cables connected to terminal block on room interface board on the front of the power module.

Connection	Signal	Progeny L/F 8000 L/F 9000	L/F 8000 (older models)	Villa
TB4-1	Wall Select 117VAC (Switched)	3	B3	7
TB4-2	Wall Feedback	2	B2	12
TB4-3	117 VAC	L	B8	3
TB4-4	Signal GND	1	B1	11
TB4-5	117 VAC Return	N	B4	1
Chassis GND	Chassis GND	GND	GND	Chassis GND

Table 2-3: Wall bucky connections to the room interface board.

Note
For 120 VAC operation the Villa Bucky requires a jumper to be installed between terminals 1 and 6.

If installing a grid cabinet or wall cassette holder, or if no wall image receptor will be employed, you must place a jumper between TB4-4 and TB4-2 to enable exposures when the wall device is selected.

Table Bucky Connections

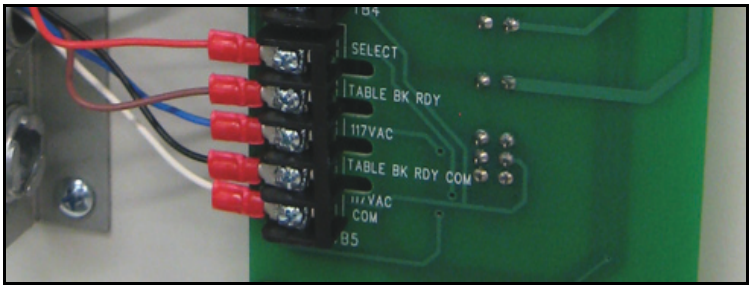

Figure 2-14. Table image receptor cables connected to terminal block on room interface board on the front of the power module.

Connection	Signal	Progeny L/F 8000 L/F 9000	L/F 8000 (older models)	Villa
TB5-1	Table Select 117VAC (Switched)	3	B3	7
TB5-2	Table Feedback	2	B2	12
TB5-3	117 VAC	L	B8	3
TB5-4	Signal GND	1	B1	11
TB5-5	117 VAC Return	N	B4	1
Chassis GND	Chassis GND	GND	GND	Chassis GND

Table 2-4: Table bucky connections to the room interface board.

Note
For 120 VAC operation the Villa Bucky requires a jumper to be installed between terminals 1 and 6.

If a grid cabinet or no image receptor will be employed, you must place a jumper between TB5 4 and TB5 2 in order to allow exposures.

Tube Rotor Connections

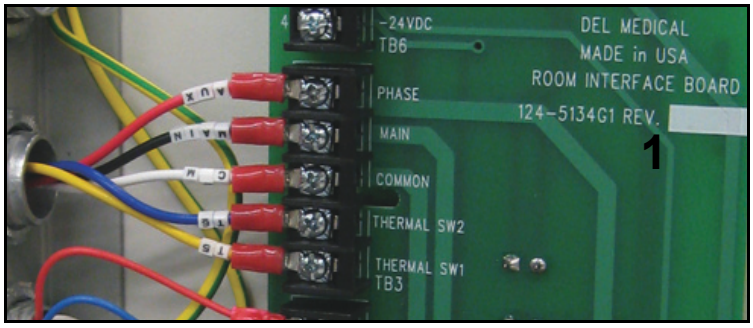

Figure 2-15. Rotor cables connected to terminal block on room interface board on the front of the power module

TB3-1: Phase (08)

TB3-2: Main (07)

TB3-3: Common (09)

TB3-4: Thermal Switch *

TB3-5: Thermal Switch Common *

*An isolated, normally closed set of contacts, mounted on the tube housing, which opens if the housing is beyond normal operating temperatures.

If no housing thermal switch is present, a jumper must be placed across TB3-4 and TB3-5 to allow an exposure.

Connecting Collimator to the Generator

The collimator can be powered by the generator's 24 VAC power supply terminal on the room interface board on the front of the power module.

1 Route the collimator power cable through the holes in the cable routing bracket (1 in Figure 2-16) on the side of the power module.

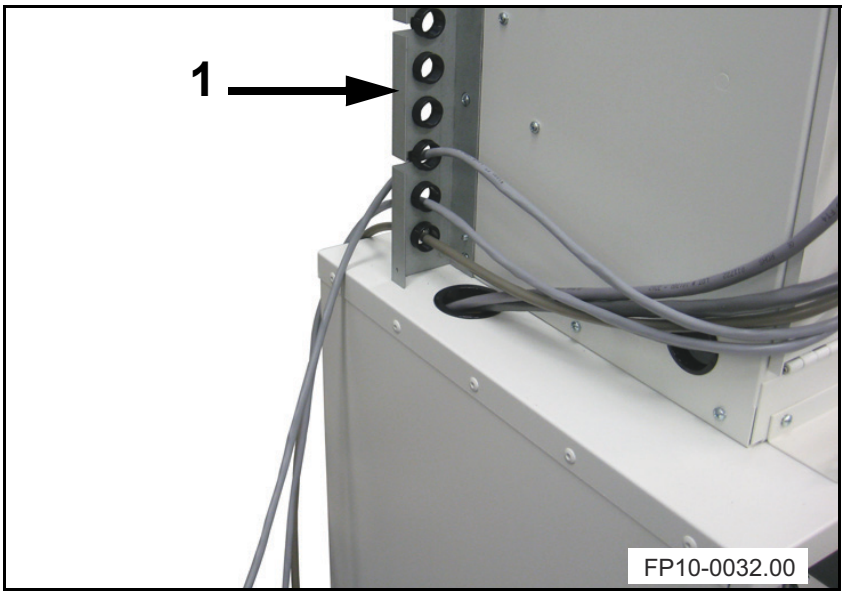

Figure 2-16. Cable routing through power module's cable routing bracket

2 Route the cable through the cable clamp (1 in Figure 2-17) on the front of the power module.

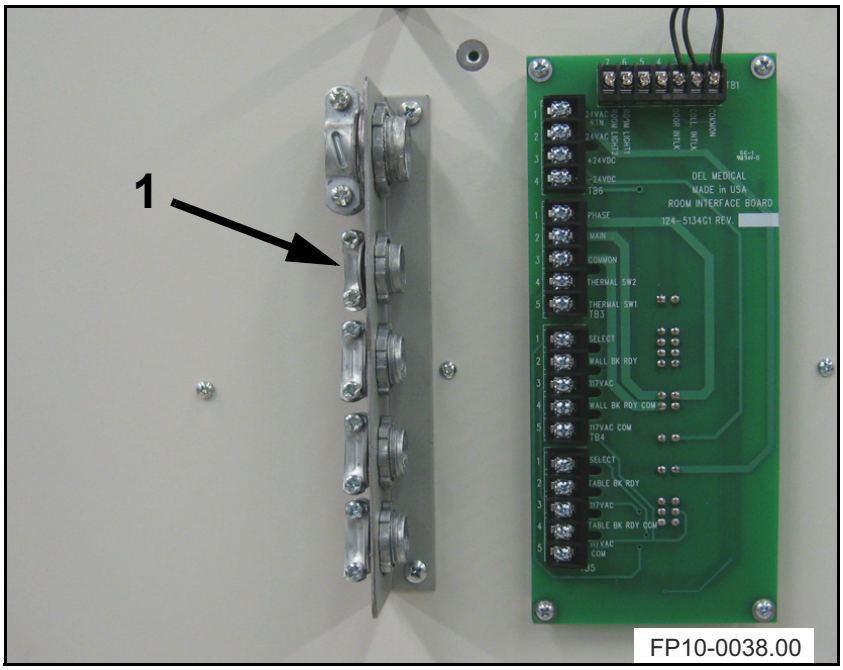

Figure 2-17. Cable routing through power module's front cable clamps

3 Connect the collimator 24VAC power cable to the 24 VAC power supply terminal TB6 on the room interface board as listed in Table 2-5. Refer to Figure 2-18 for location of terminal TB6-1 and TB6-2.

TB6	Cable
TB6-1	White
TB6-2	Black
Ground	Green/Yellow

Table 2-5: Collimator power supply connections.

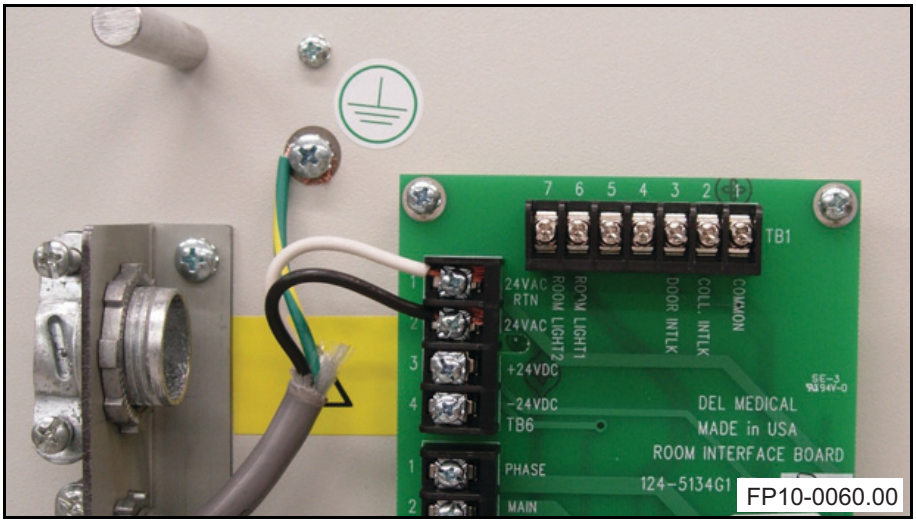

Figure 2-18. Collimator 24V power supply connection.

Connecting Table and/or Wallstand Locks Power to the Generator

The table's and/or wallstand's lock(s) can be powered by the generator's 24 VDC power supply terminal on the room interface board on the front of the power module.

1 Route the cable(s) through the holes in the cable routing bracket (1 in Figure 2-19) on the side of the power module.

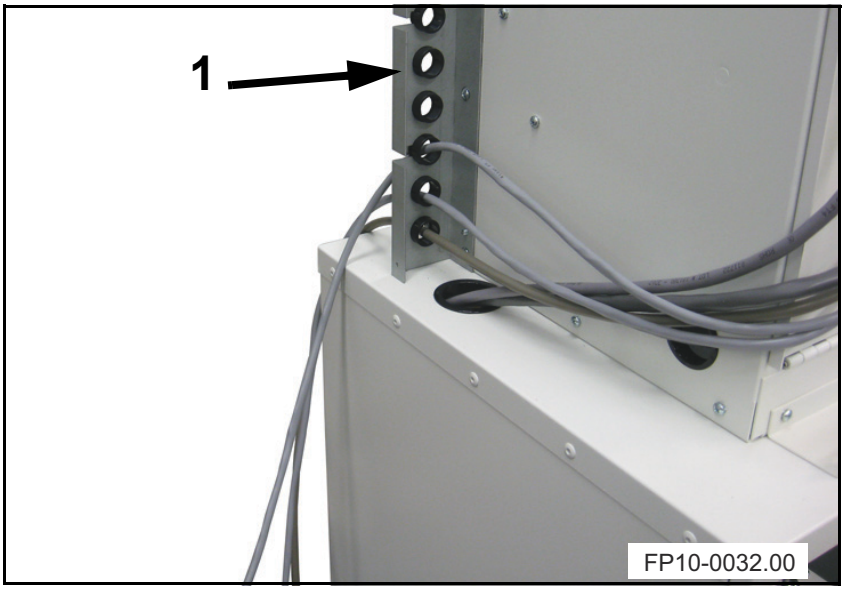

Figure 2-19. Cable routing through power module's cable routing bracket

2 Route the cable through the cable clamp (1 in Figure 2-20) on the front of the power module.

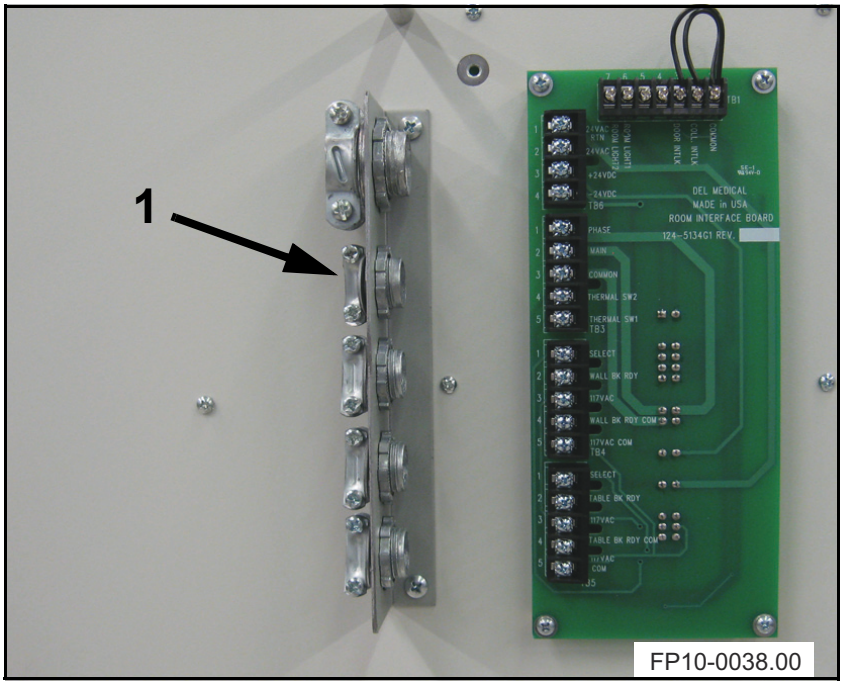

Figure 2-20. Cable routing through power module's front cable clamps

3 Connect the table's and/or wallstand's lock(s) 24 VDC power cable(s) to the 24 VDC power supply terminal on the room interface board as listed in Table 2-6, refer to Figure 2-21 for location of terminals TB6-3 to TB6-4.

TB6	Cable
TB6-3	Marked +24
TB6-4	Marked -24
Ground	Green/Yellow

Table 2-6: Table and/or wallstand locks power supply connections.

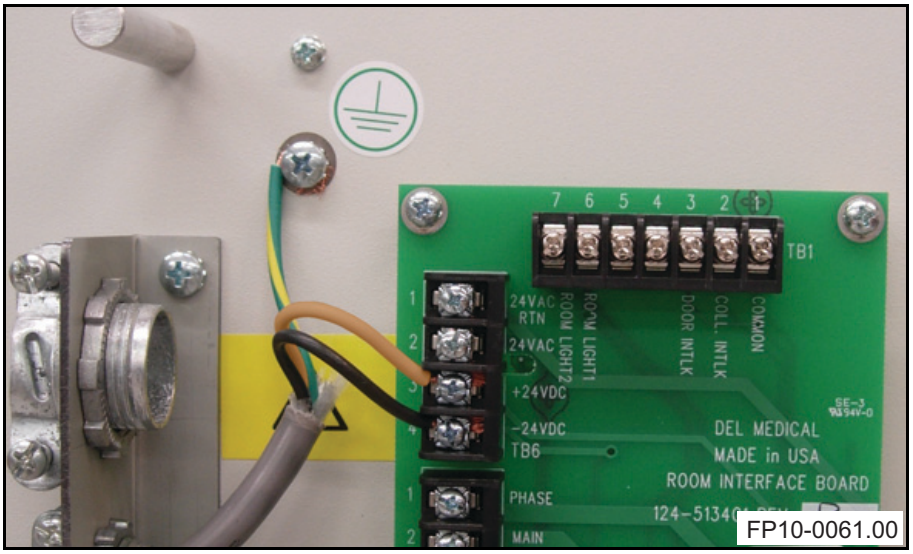

Figure 2-21. Table and wallstand locks 24V power supply connections.

Collimator and Door Interlock

Connecting Collimator and/or Door Interlock

Collimator and/or door open interlockings are connected as described in steps 1 to 4, starting on page 2-25.

Not connecting Collimator and/or Door Interlock
If you are not connecting any of these, you will need to set jumpers on the room interface board as listed in Table 2-7, refer to Figure 2-22 for jumpers J1 and J2. If one of the interlocks is connected, set the jumper for the one not used. ***If this is not done, exposures will not be allowed***.

Jumper	Between terminals on Room Interface Board
J1 (no collimator interlock)	TB1-1 and TB1-2
J2 (no door interlock)	TB1-1 and TB1-3

Table 2-7: Jumper settings for system with no collimator and/or door open interlocks.

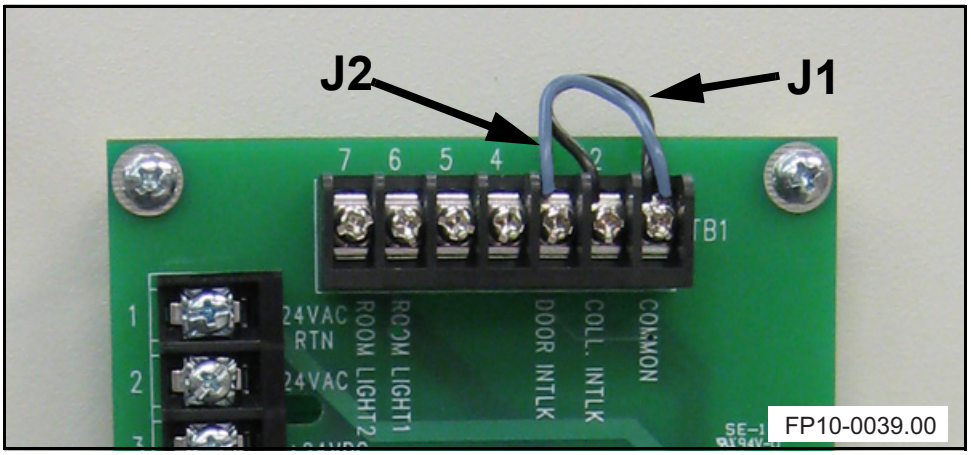

Figure 2-22. Jumper settings for system with no collimator and/or door open interlocks.

1 Route the cable(s) through the holes (1 in Figure 2-23) in the cable routing bracket on the side of the power module.

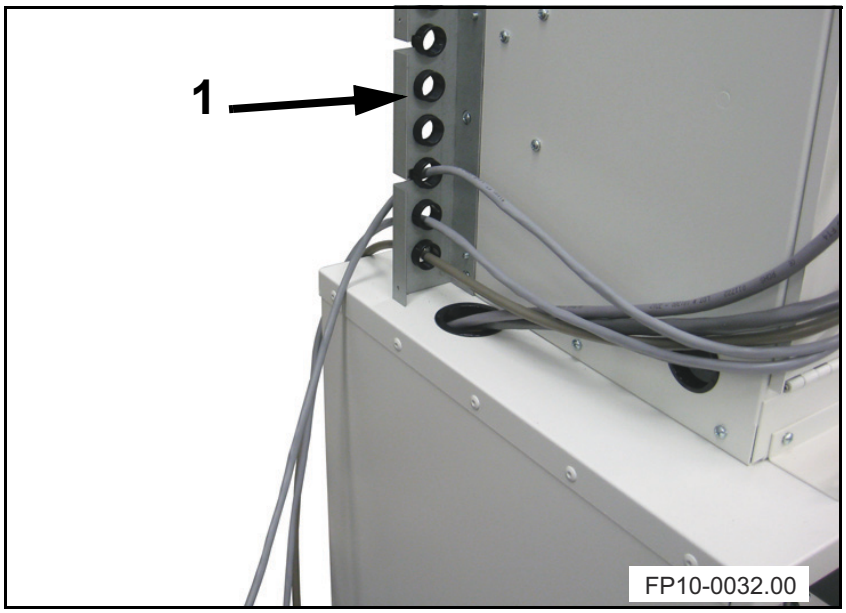

Figure 2-23. Cable routing through power module's cable routing bracket

2 Route the cable(s) through the upper cable clamp (1 in Figure 2-24) on the front of the power module.

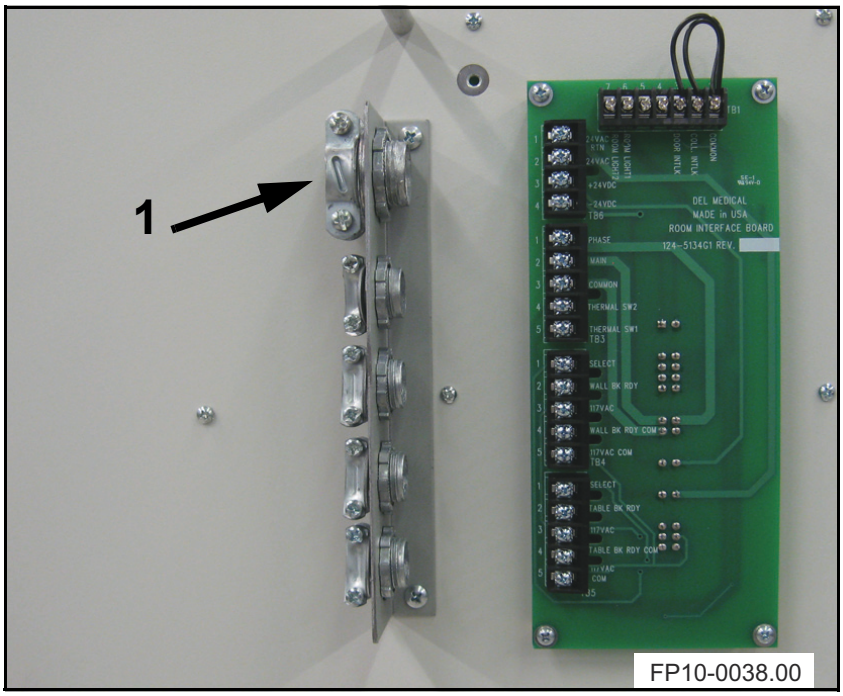

Figure 2-24. Cable routing through power module's front cable clamps

3 Connect the collimator interlock cable wires to TB1-1 and TB1-2 terminals on the room interface board as shown in Figure 2-25.

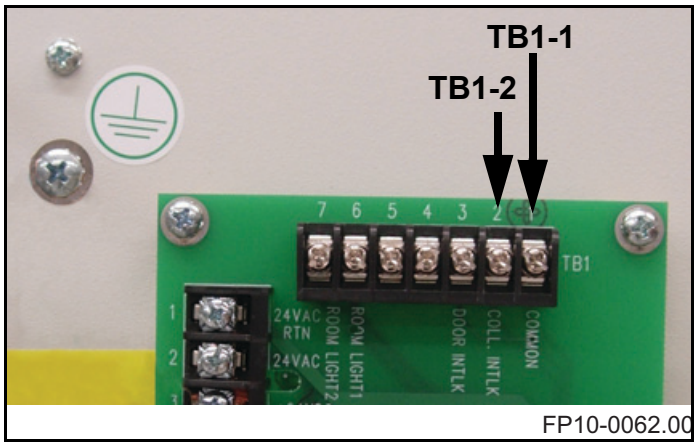

Figure 2-25. Collimator interlock cable wires to be connected to TB1-1 and TB1-2 on the room interface board.

4 Connect the door interlock cable to TB1-1 and TB1-3 terminals on the room interface board as shown in Figure 2-26.

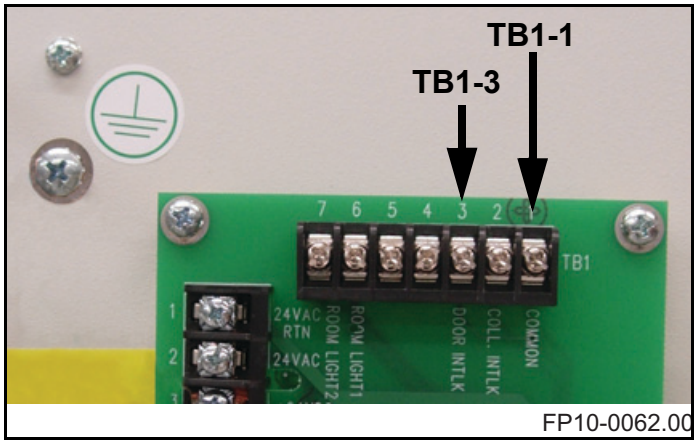

Figure 2-26. Door interlock cable wires to be connected to TB1-1 and TB1-3 on the room interface board.

Connecting a Room-In-Use Indicator Light Circuit

You can connect an room-in-use indicator light that will indicate that x-ray exposure is being taken. The Anthem will close the circuit when the PREP button is pressed and open the circuit when the exposure sequence is ended or aborted. The room-in-use light circuit is not powered by the Anthem and will need an external power source, see specifications for power rating for the room-in-use light circuit.

1 Connect the circuit to TB1-6 and TB1-7 on the Room Interface Board as shown in the diagram below.

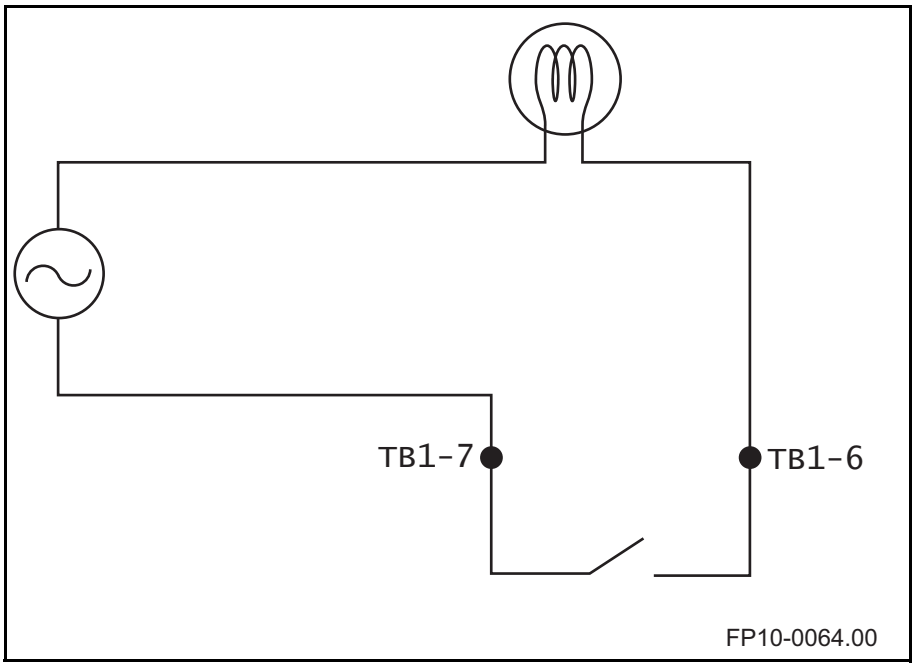

Figure 2-27. Room-In-Use Indication Light Circuit Diagram

Connecting the Control Console

The Operator's Control Console communication cable is bundled up at the back of the top cabinet.

1. Unwind it and route it to where the Operator's Control Console is to be located.
2. Connect the communication cable to the control console as shown in Figure 2-28.

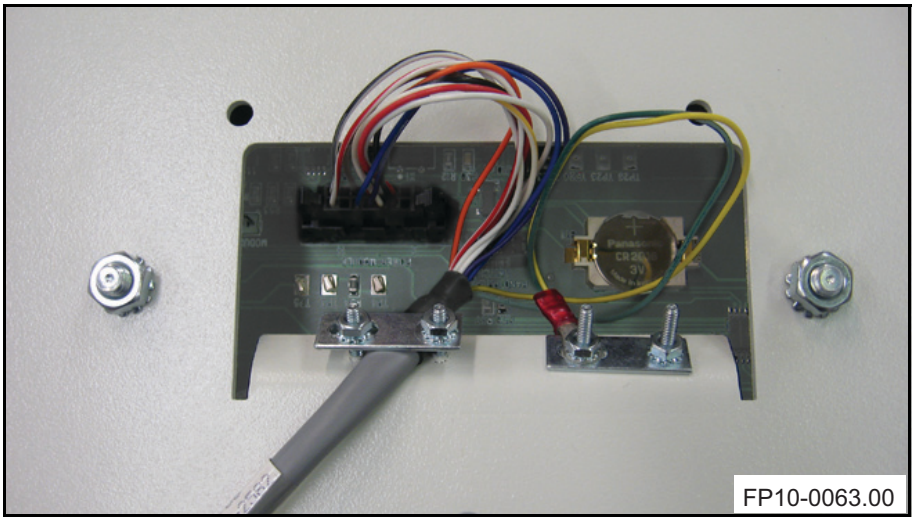

Figure 2-28. Communication cable connected to the back of the operator's Control Console.

Connecting the HT Cables to the Generator

Instructional text and illustration.

1. Remove the high-tension (HT) cables from their box. Before connecting the HT cables to the generator and X-ray tube, make sure they are routed so that enough slack is provided where needed.
2. Route the cables through the upper right opening on the back of the lower cabinet on the generator.
3. Remove the protective sheathing from the ends of the HT cables.
4. Slide the threaded ring (1 in Figure 2-29) onto the end of each cable.
5. Install the clamp (2) on the cable end as shown.
6. Slide the O-ring (3) on the cable end as shown below.
7. Thoroughly coat the entire cable end (4) with anti-moisture silicone paste included in the cable box.

Caution

Make sure that you coat the entire cable end with silicon paste or tube will get damaged.

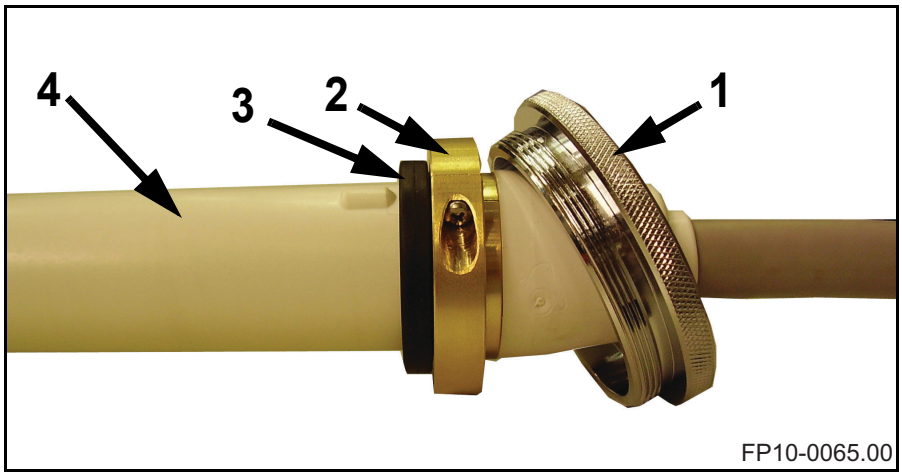

Figure 2-29. HT Cable Preparation

Caution

Before connecting the high tension cables to the tube or generator, make sure that the set screw shown below is backed off several turns so that it does not interfere with the tightening of the cable. The cables may get damaged if you do not. Disregard this caution if you have Eureka cables.

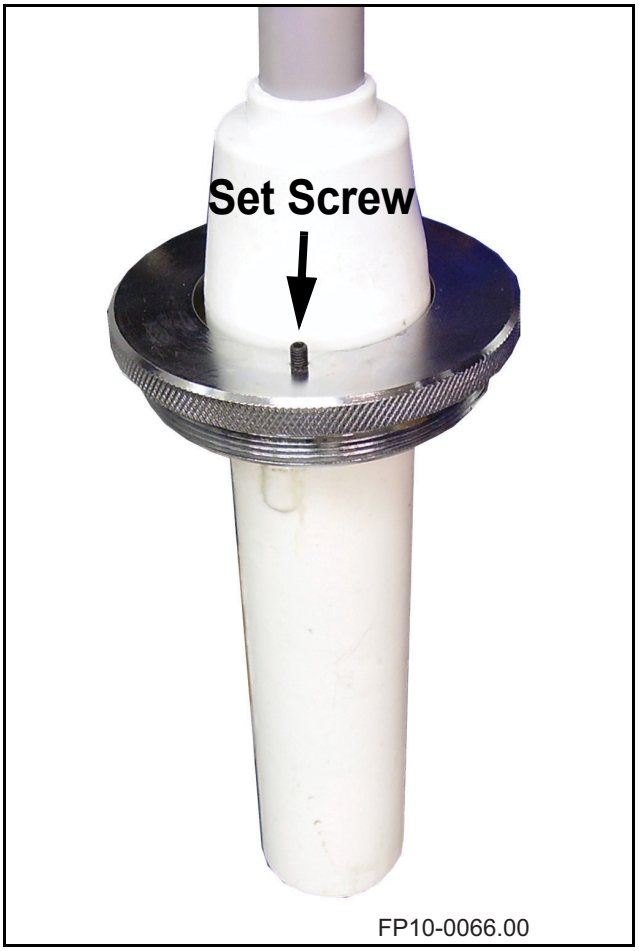

Figure 2-30. Set Screw

8 Remove the protective plugs from HT tank inside the generator.

9 Connect the HT cable going to the **cathode (-)** socket on the tube to the **CATHODE (-)** socket on the HT tank (1 in Figure 2-31).

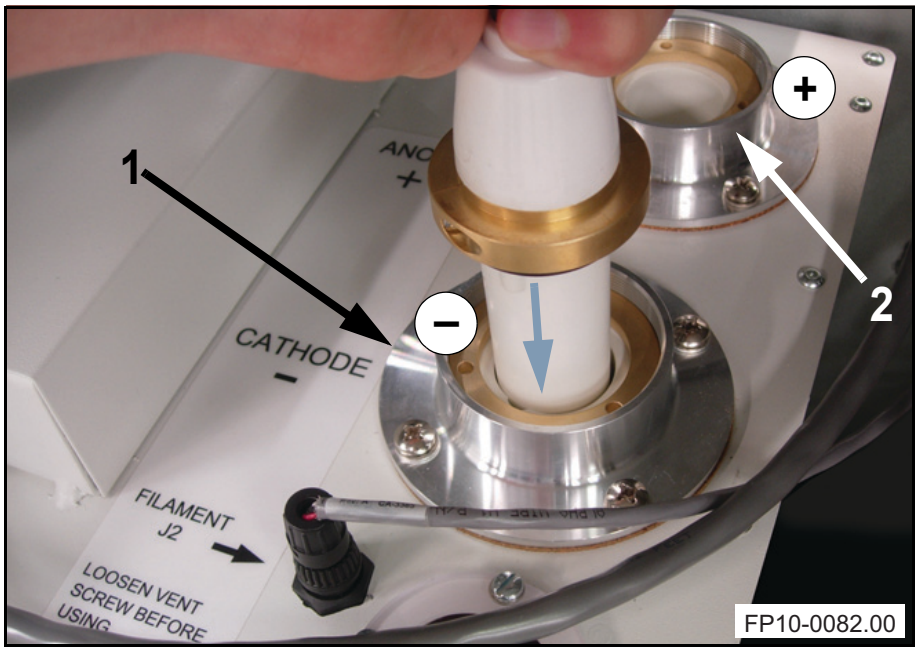

Figure 2-31. Cathode HT cable to HT tank.

10 Connect the HT cable going to the **anode (+)** socket on the tube to the **ANODE (+)** socket on the HT tank (2).

11 Tighten the rings (1 in Figure 2-32) to secure the connections.

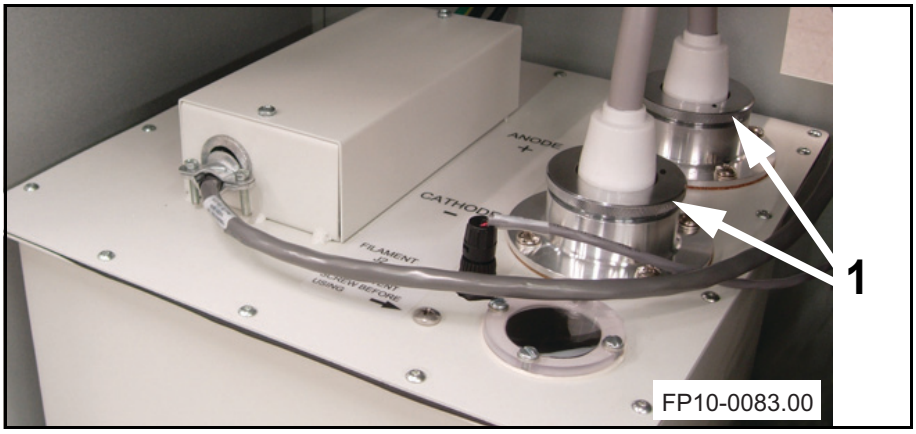

Figure 2-32. HT cables connected plugged in into HT tank.

Caution

Connecting an HT cable to the wrong socket on the generator will destroy the tube. Make sure to verify that Cathode (-) on generator goes to cathode (-) on tube and that Anode (+) on generator goes to anode (+) on tube.

2.3 Generator Start Up Operational Tests And Installation Set Up

This procedure will verify correct electrical operation and lead the service engineer through the generator calibration. This procedure is not intended to limit the service engineer's final assembly inspections. At the discretion of the engineer, additional testing may be of value. Instructions and test criteria can be obtained by contacting our technical support group. This procedure assures that mechanical and electrical assemblies of the generator have been completed. Further, this procedure requires that the default system configuration setup of the controller has already been programmed.

Warning

Lethal voltages are present on the large filter capacitors in this unit. Exercise extreme caution when working near the long copper bus bars attached to the two large capacitors in the base of the power module. Always verify with a dc voltmeter that the capacitors are discharged before attempting any service in this area.

Warning

The large commutating capacitors mounted to the right on the rear panel of the power module will remain charged even when the power to the unit is turned off.

Caution

Failure to correctly program the default system configuration file may damage components in the high voltage circuit and x ray tube.

2.3.1 Test Equipment Required

- Digital Multimeter
- Storage oscilloscope (100MHz or better)
- Dynalyzer™ (optional)

2.3.2 Inspection of High Tension Transformer

1 Turn Mains Power OFF

2 Visually inspect transformer for signs of oil leaks or dents which would decrease internal component spacing

1 Check the oil level in the transformer. Oil is at proper level as long as it reaches the horizontal level pin (1 in Figure 2-33) that you can see in the circular window.

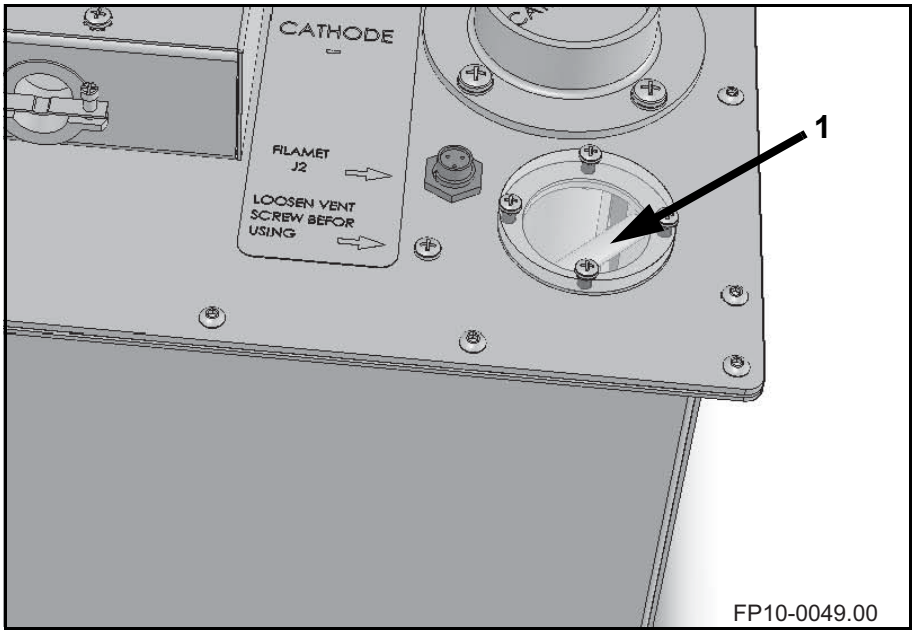

Figure 2-33. Oil level inspection window

2 Check for loose connections at the transformer terminals

3 Check tightness of high voltage cable locking rings

2.3.3 Inspection of Power Module

1 Turn Mains Power OFF

2 Check that circuit boards are securely fastened in place and that board connectors are properly aligned

3 Check that all electrical components are mounted securely

4 Inspect electrical connections for signs of looseness or oxidation. Pay careful attention to power and commutating capacitors as well as incoming power supply connections

2.3.4 Inspection of Controller

1. Turn Mains Power OFF
2. Check that all electrical components are mounted securely
3. Inspect electrical connections for signs of looseness or oxidation

2.3.5 Operational Testing

The following operational test instructions refer to specific test points on the different boards on the generator. The boards and test points are represented in Figure 2-34 to Figure 2-38.

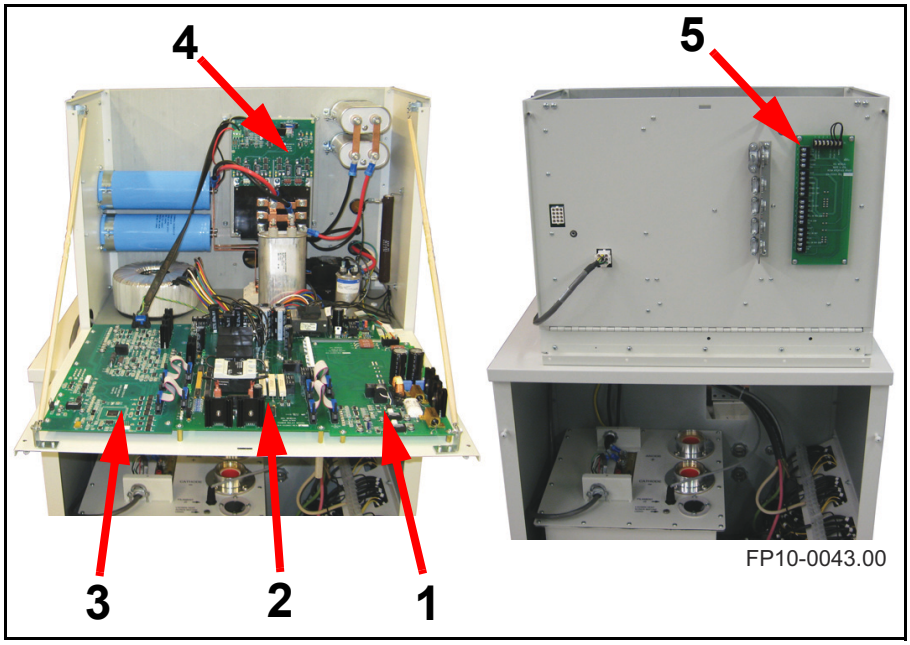

Figure 2-34. Board locations

1	Filament Board, part# 124-5131G1
2	Power Relay Board, part# 124-5136G2
3	Main Control Board, part# 124-5132G2
4	IPM driver Board, part# 124-5130G1
5	Room Interface Board, part# 124-5134G1

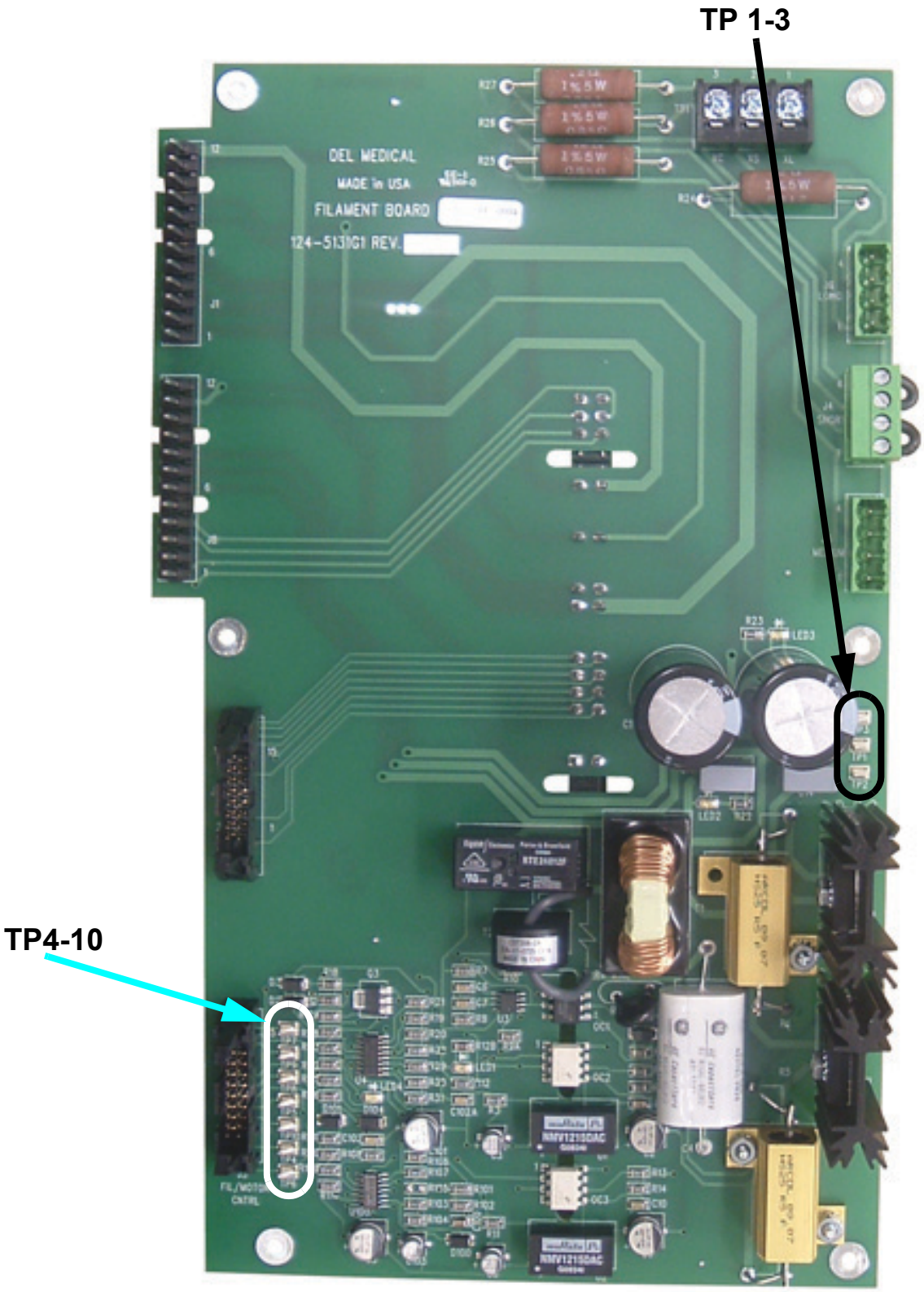

FP10-0052.00

Figure 2-35. Test points on the Filament board (124-5131G1)

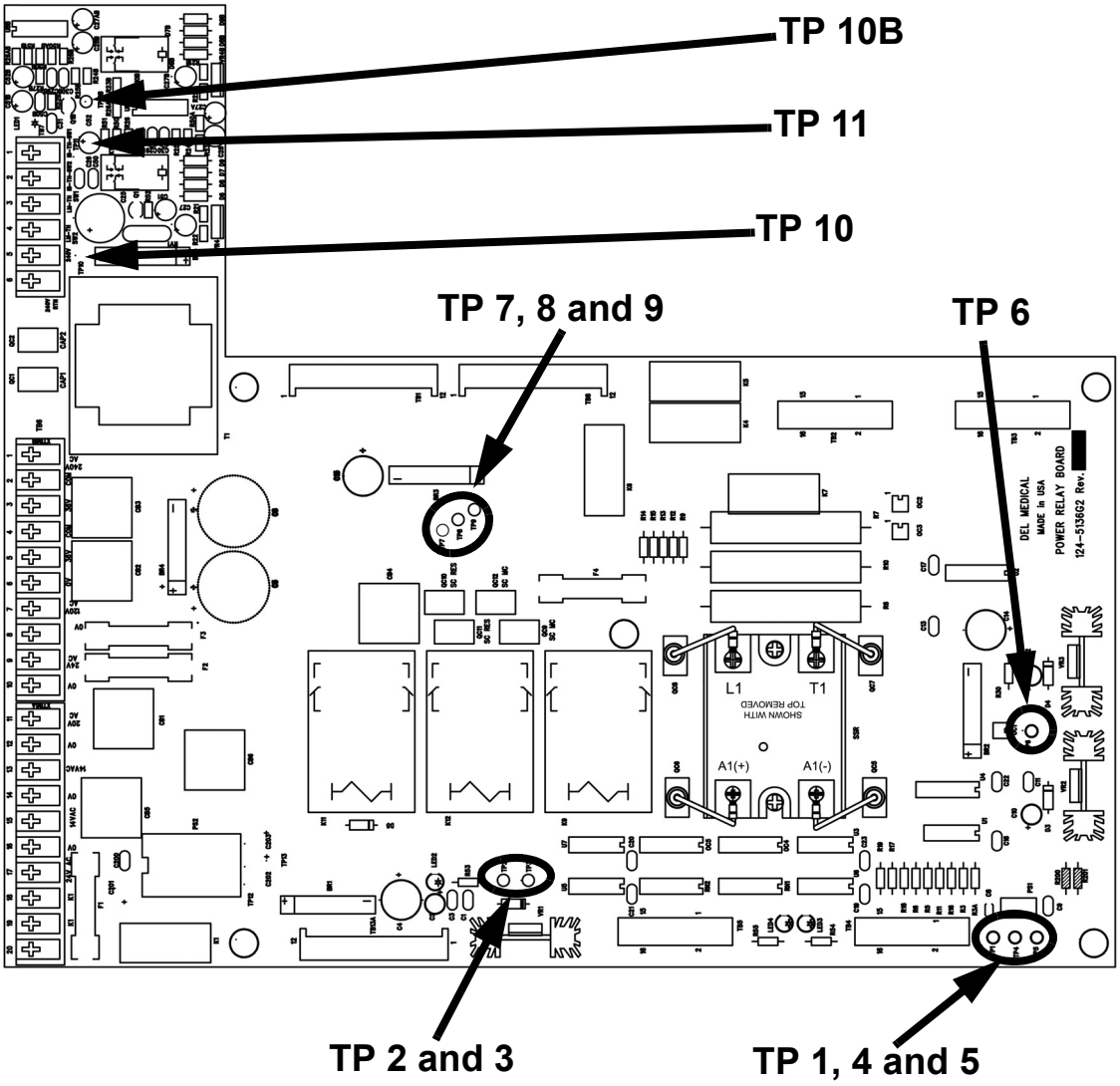

Figure 2-36. Test points on the Power Relay board (124-5136G2)

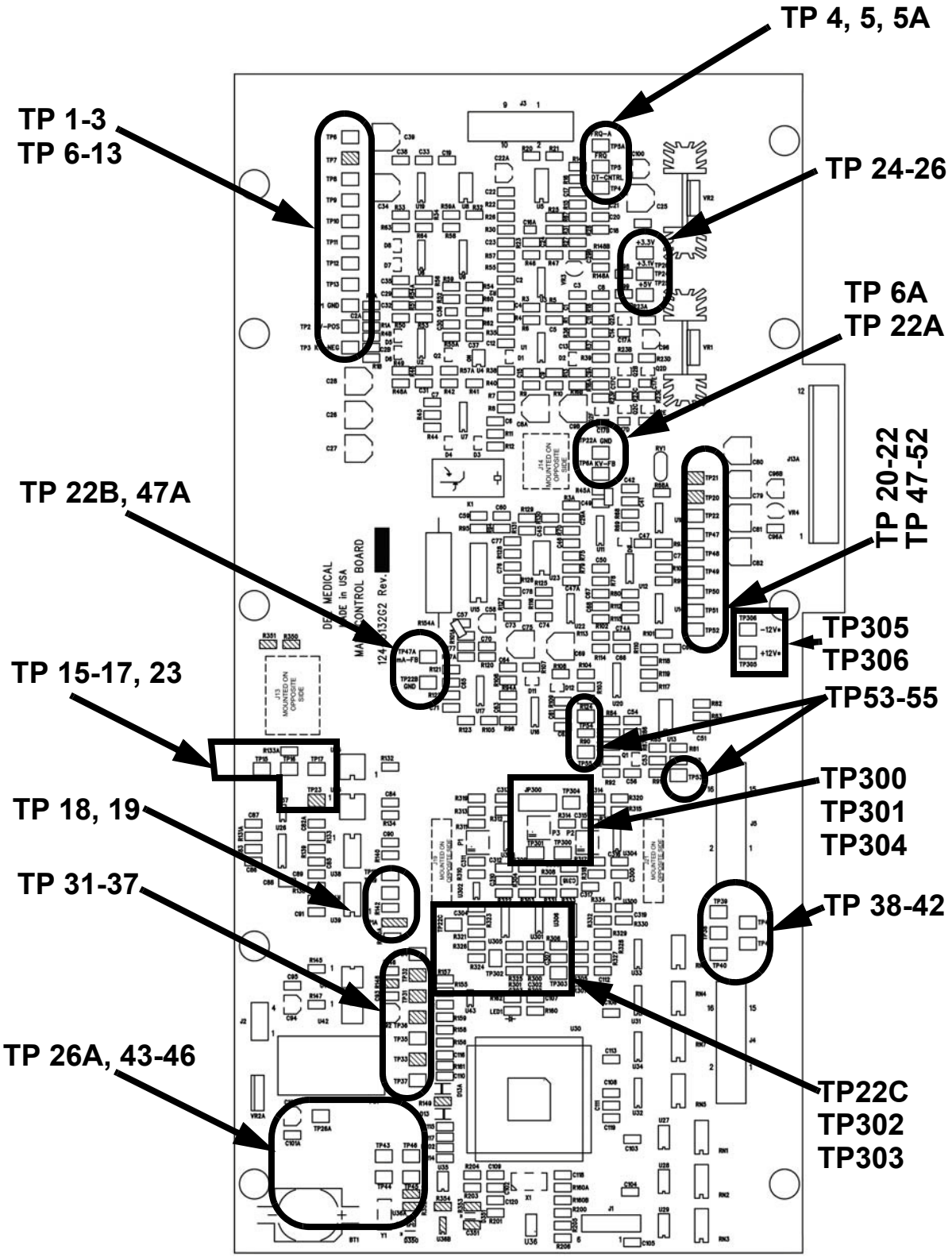

Figure 2-37. Test points on the Main Control board (124-5132G2)

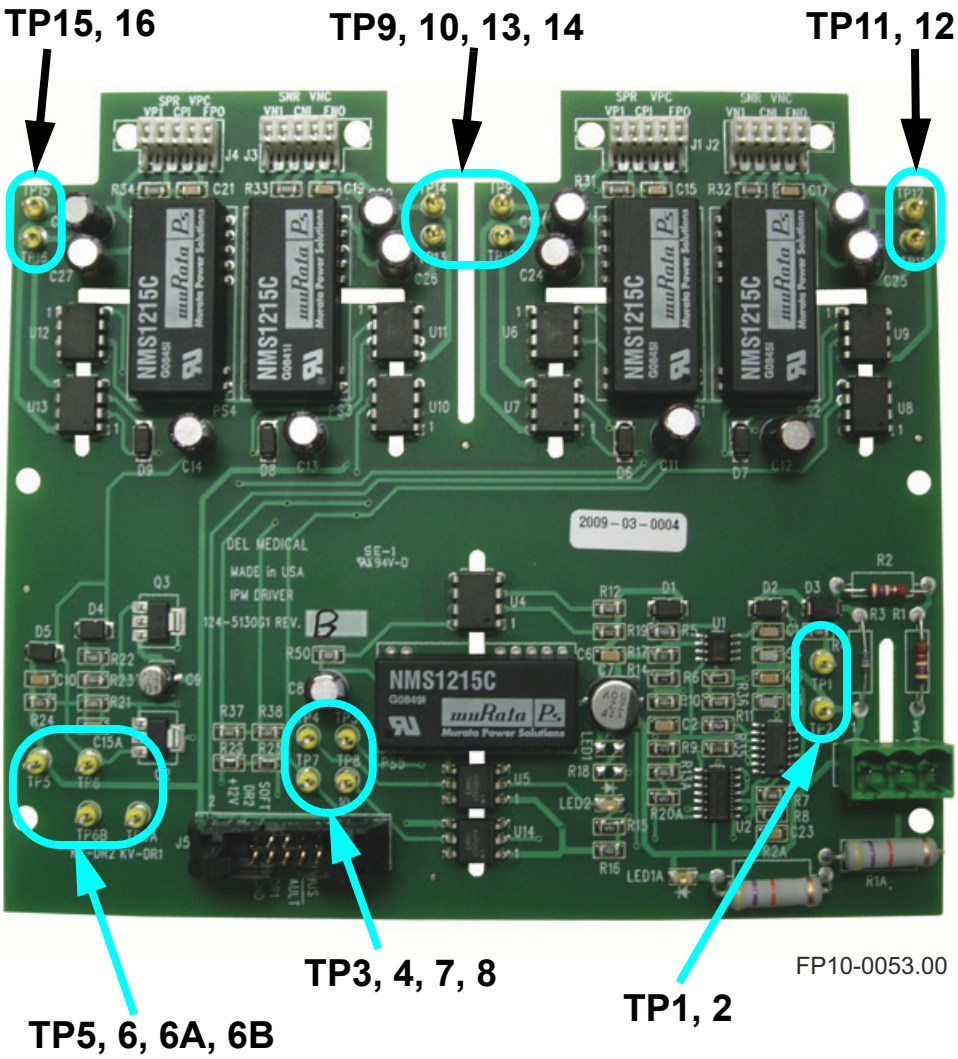

Figure 2-38. Test points on the IPM Driver board (124-5130G1)

Verify board functionality as follows:

1. Disconnect the stator and filament cables from the power module.
2. Turn the mains power disconnect switch ON. Do not turn the control on at this time. (**Note:** LED1 - LED4 will light on the Power/Relay board 124-5136G1.)
3. Measure 240 VAC at TB7-5 and TB7-6 on the Power/Relay board 124-5136G1.
4. Press the ON switch on the side of the controller. Observe the following actions:
   a. The control panel will run through a short self test, then display the default technique settings screen.

a. Connect the negative lead of a D.V.M. to the ground test point (TP1) on the Power/Relay board 124-5136G2. Check for the following voltages on the Power/Relay board:

a. TP4 = -15 VDC +/- 5%

b. TP5 = +12 VDC +/- 5%

5 Verify voltage on Power/Relay board 124-5136G2:
Voltage between TP2 and TP3 is 9V +/-3% (TP3 is COM)
Voltage between TP1 and TP5 is +12V +/-3% (TP1 is COM)
Voltage between TP1 and TP4 is -15V +/-3% (TP1 is COM)
Voltage between TP7 and TP8 is +50V +/-10% (TP8 is COM)
Voltage between TP9 and TP8 is -50V +/-10% (TP8 is COM)

6 Connect the negative lead of a D.V.M. to the test point (TP9) on the Filament board 124-5131G1. Check voltages on the Filament board at TP10 = +12VDC +/- 5%

7 Connect the negative lead of a D.V.M. to the ground test point (TP1) on the Filament board 124-5131G1. Check for the following voltages on the Filament board:

a. TP2: +50V +/-10%

b. TP3: -50V +/-10%

8 Verify voltage on the Main Control board 124-5132G2, TP22 is COM
Voltage between TP20 and TP22 is -12V +/-3%
Voltage between TP25 and TP22 is +5V +/-3%
Voltage between TP26 and TP22 is +3.3V +/-3%
Voltage between TP24 and TP22 is +3.1V +/-3%
Voltage between TP305 and TP22C is -12V +/-3%
Voltage between TP306 and TP22C is -12V +/-3%

9 Reconnect the stator and filament cables to the power module.

10 Verify voltage on the IPM Driver board 124-5130G1:
Voltage between TP9 and TP10 is 15V +/-3% (TP10 is COM).
Voltage between TP11 and TP12 is 15V +/-3% (TP12 is COM).
Voltage between TP13 and TP14 is 15V +/-3% (TP14 is COM).
Voltage between TP15 and TP16 is 15V +/-3% (TP16 is COM).

2.3.6 Verify X-Ray Safety Relay Function

1. Disconnect the Door Interlock connection (on the Room Interface board 124-5134G1)
2. Press the Prep switch on the console.
   Green LED should not turn on and an error message will display on the LCD.
3. Reconnect the Door Interlock connection
4. Press the Prep switch on the console.
   Green LED should light on after about 1 second.
5. Turn the X-ray control OFF.

2.3.7 Programming the Default System Configuration Menu

It is necessary to configure portions of the Anthem operational software. During the installation process, the installer must identify any installed components:

- X-Ray Tube Selection
- Default power derating settings

The default system configurations are programmed in the Service Mode in the following manner:

1. Depress and hold the second button from the lower left corner of the display screen while turning the generator ON to enter Service Mode.
2. Default password for Service Mode is set to “0000”. Verify that the default password shows in the display and press OK. If it is not set on “0000” use the buttons above the display to highlight the characters, and adjust their numeric values with the rotational knob.
3. Press ENTER and the default startup screen will appear as the generator is in its power up sequence.

You may now select and alter the default settings for the following parameters:

- **Allow APR Updates** (Yes or No)
- **Power Level** (50%, 60%, 70%, 80%, 90% or 100%). See power derating on next page for details.
- **Tube Select**. Use Rotational Knob to scroll to the applicable tube alternative. See “X Ray Tube Alternatives” on page 2-44 for available alternatives.
- **Flash Options**. There is no default setting to be made for this feature. This feature is used for transferring the APR user database to a laptop or PC for modification or backup, or to reset the default data. Instructions for adjusting the APR database are found in “Managing the APR database” on page 5-13.
- **Misc Options:** This location contains Troubleshoot Yes/No, Demo Mode Yes/No and Bucky Start Prep/Expose.
  Troubleshoot: No is the default, Yes will display all of the DAC values based on the technique selected in the normal operating mode.
  Demo Mode: No is the default, Yes disables the communication link between the console and the main control board. Typically used for troubleshooting.
  Bucky Start: Prep is the default. Changing this setting to Expose will result in the bucky driving at the time of exposure.

- **Change Password**. You can change the default password for access to the Service Mode. Make sure to take note the new password and save it in a safe place.
- **Calibration**. The generator needs an initial calibration at the end of the installation process before it is put in service. You will be instructed to do this later in this chapter.

Power Derating

At this step, you must decide if the Anthem Generator will operate at full rated output. If the unit is to be installed on a less than ideal power line, it will be necessary to derate the output power. Pressing the Power % Level button will toggle through the available range of derating percentages.

Derating the generator will reduce the mA output during the exposure in the 2 point mode. The effect will be longer exposure times. kV will not be affected.

In the 3 point mode, derating will lower the allowable kilowatt product, which will limit the operator's available technique selections. When a satisfactory power line is connected to the generator, the programmed power level can be increased accordingly.

X Ray Tube Alternatives

The output of this generator is compatible with the following certified components.

Note
If your desired tube is not on the tube list, contact Del Medical Imaging Technical Support for assistance.

tube Brand	Model
Comet	DX39H - 0.6 X 1.5
Dunlee	DU303M - 1.0 X 2.0
	PX-1312 - 0.6 X 1.2
	PX-1429 - 0.6 X 1.2
	PX-1436 - 0.6 X 1.2
Eimac	A119 - 1.0 X 2.0
	A132 - 0.6 X 1.2
	A272 - 0.3 X 0.7
	A292 - 0.6 X 1.2
Eureka	RAD 8 - 1.0 X 2.0
	RAD 13 - 1.0 X 2.0
	RAD 14 - 0.6 X 1.2
	RAD 16 - 1.0 X 2.0
	RAD 21 - 0.6 X 1.2
	RAD 25 - 1.0 X 2.0
	RAD 40 - 0.6 X 1.2
	RAD 56 - 0.6 X 1.2
	RAD 60 - 0.6 X 1.2
	RAD 68 - 0.6 X 1.2
	RAD 68 - 1.0 X 2.0
	RAD 74 - 0.6 X 1.5
Phillips	PG256 - 0.6 X 1.0
Toshiba	DR-3724H - 0.6 X 1.2
	UX-51H39 - 1.0 X 2.0
	UX-51H42 - 0.6 X 1.5
	UX-E7255
	UX-E7884

4 Press the EXIT button to save changes and allow control to finish the power up sequence.

5 Turn generator power OFF before beginning the next step.

Perform Default User Screen setup

The default user screen setup is programmed in the Administrator Mode in the following manner:

1. Depress and hold the first button from left on lower side of display window and turn generator power ON to enter Administrator Mode. The console will now display the default user setup screen.
2. Configure the unit in a manner best suited for the installation. Consult doctor or operator to make sure that the default screen setup accommodate their needs.
   - Select a default mAs setting
   - Establish the 2 Point kV Default
   - Establish the Default Startup mode (2 or 3 point)
   - Establish the 3 Point kV Default setting
   - Select the 3 Point mA Default setting
   - Select the 3 Point Time Default
   - Select the default Image receptor (Wall, Table, or None)
   - Select the Display Contrast Default (Set to approximately 50)
3. Press the EXIT button and allow generator to complete power up sequence.

2.3.8 Installing the Del APR Utility Software

Necessary Hardware

- Laptop or stationary PC, running Windows 98 or later.
- High speed (recommended) internet connection.

Installation

1. Download the Del APR Utility for Anthem from the Del Medical Technical Support web site, http://www.delmedicaltechsupport.com
2. Click Software & APR Database in the main menu and chose APR Utility (Del) in the sub menu. Locate the appropriate APR Utility software in the table and download it.
3. Download the zip file to your hard drive.
4. Unzip the Del APR Utility files to a temporary folder on your hard drive (C:/temp), and perform the installation from that folder.

   It is recommended that you exit and close any other programs before beginning the installation of the APR utility program.

   Unzip the Del APR Utility files into a temporary folder (c:/temp).

Figure 2-39. Extracted Del APR Utility files

5. Double click the Setup file. Make sure no other application is running and click OK to start Del Utility Setup.

6 Verify that the default destination of the Del APR Utility Software is as shown below (C:\Program files\DelAprUtility).

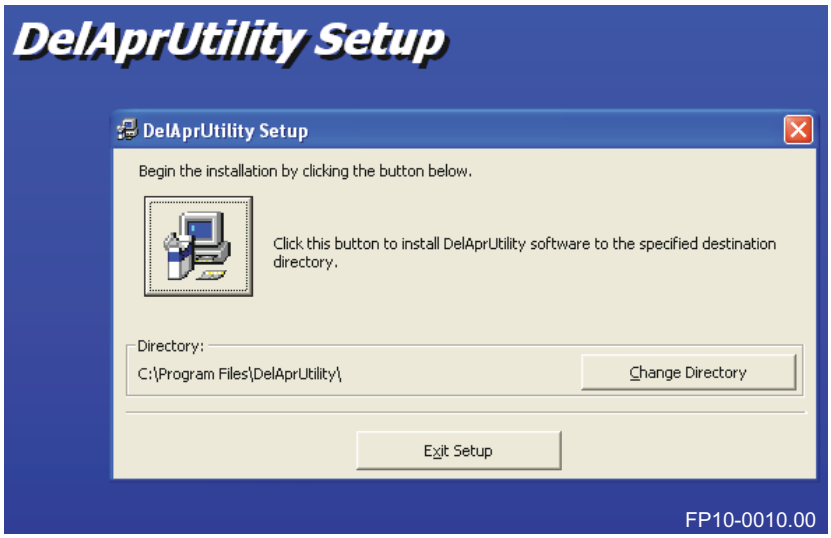

Once installed in the default folder, the executable file that will start the actual program is named delaprutility.exe.

For your convenience, you may create a shortcut on your desktop for this program. Click Start -> All Programs -> DelAprUtility, right-click DelAprUtility and click Create Shortcut.

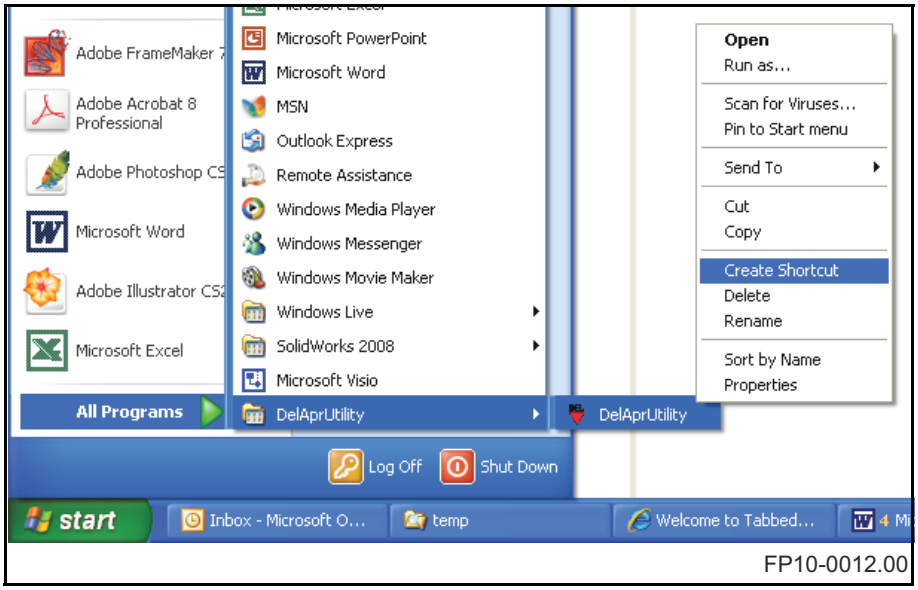

Figure 2-40. How to create a shortcut on your desktop for the Del APR Utility software.

2.3.9 Initial Calibration

The generator is now ready for Calibration, refer to "Calibration Procedure" on page 5-2, for calibration instructions.

Operation

3

3.1 Introduction

The Anthem is a high frequency, microprocessor based x-ray generator, which is designed for general radiographic applications. The operator's control features a unique menu driven, soft button interface that makes it extremely easy to use.

Caution

If your machine is setup for password protection, write down what your password is and store it in a safe place. If you forget your password, you will have to send the control console back to the factory to get it reprogrammed. The installation technician will tell you if your machine has password protection or not.

3.2 Safety Precautions

Before attempting to operate the generator, familiarize yourself with the safety concerns listed in this section.

Caution

The following procedures will produce X-rays. Operating personnel should take precautions to ensure their personal safety and the safety of others in close proximity. Minimum precautions are as follows:
- Wear lead aprons.
- Personnel remaining in the X-ray room during exposure should be behind a lead shield.
- Minimize radiation scatter through doorways, walls and floor.

Warning

No foreign objects which can attenuate or scatter the X-ray beam are allowed between x-ray tube and table top during exposure. Failure to follow this may result in serious injury.

Warning

This generator is intended to be used as part of a system for the intended generation of X-rays for medical diagnosis.

X-rays generate a potential risk for both patients and operators.

For this reason, the application of X-rays for a given medical purpose must aim at the minimization of radiation exposition to any persons.

Those persons responsible for the application must have the specific knowledge according to legal requirements and regulations and must establish safe exposure procedures for this kind of systems.

Those persons responsible for the planning and installation of this equipment must observe the national regulations.

3.3 Operator Control Console

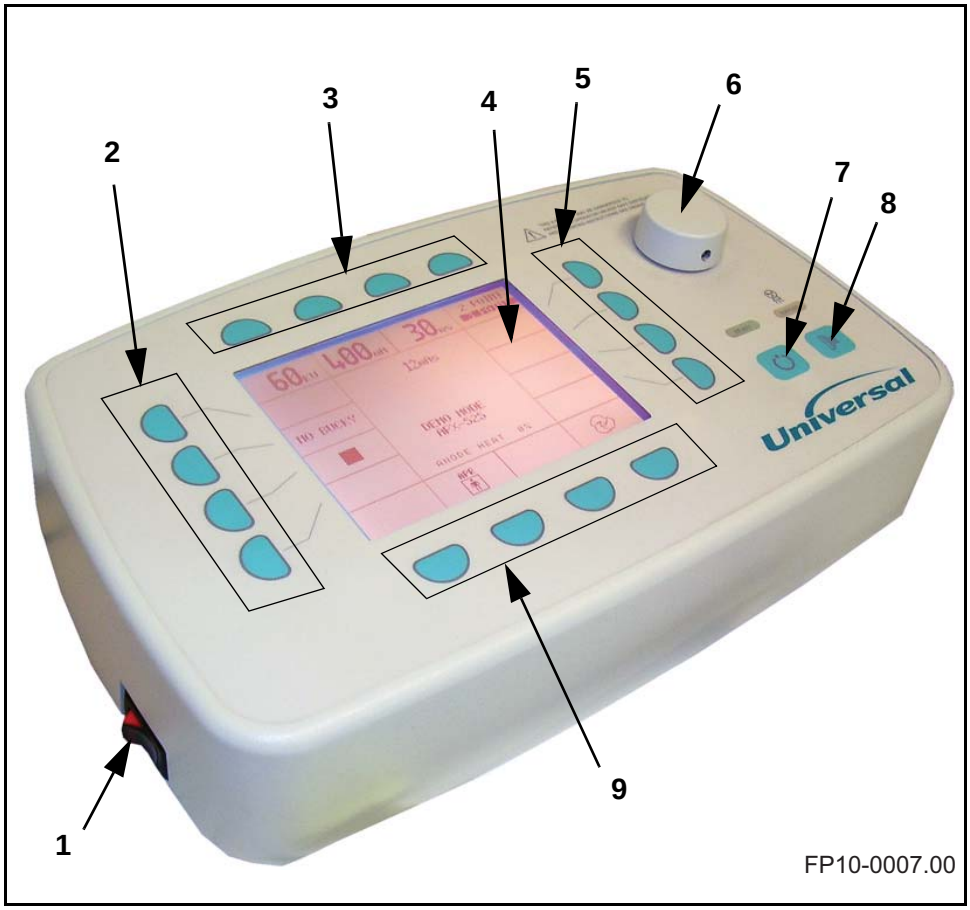

Figure 3-1. Control Console

1 Power Switch

2 Left Side Multi Function Buttons

3 Top Multi Function Buttons

4 Display

5 Right Side Multi Function Buttons

6 Rotational Knob

7 Prep Button

8 Exposure Button

9 Lower Multi Function Buttons

3.3.1 Anthem Control Console Description

The multi function, membrane buttons and rotational knob are used either to make a selection from the alternatives listed in the display, such as the optional AEC mode, APR Mode, or to select a technique parameter, such as to change the kV, time, mA, or mAs.

There are two methods available to change technique parameters:

- For a numerical parameter with a range of values, such as kV, mAs, time, or mA, you must first press the button adjacent to the parameter you wish to change. The present value will be highlighted on the screen. This value can now be changed by turning the rotational knob clockwise to increment the value or counterclockwise, to decrement the value.
- For other parameters, such as the selection of focal spots, film receptors, AEC fields, density, two or three point operating modes, APR Mode, and several other selections, pressing the multi function button repeatedly will toggle through the possible values.

3.3.2 Rotational Knob

The rotational knob is used in conjunction with the kV, mAs, Time, and centimeter thickness buttons. When one of those buttons is pressed, that parameter is highlighted on the screen in reverse video. The values are changed with the rotation of the knob.

3.3.3 Prep and Expose buttons

To make an exposure press and hold down the <PREP> button (to the left). When the green READY light above <PREP> button displays, continue holding down <PREP> while you press the <EXPOSE> button (to the right). When the exposure occurs, the yellow X-RAY light above the <EXPOSE> button will be illuminated and an audible tone will sound for the duration of the exposure. When the lights go out the exposure has been taken and you can release the two buttons.

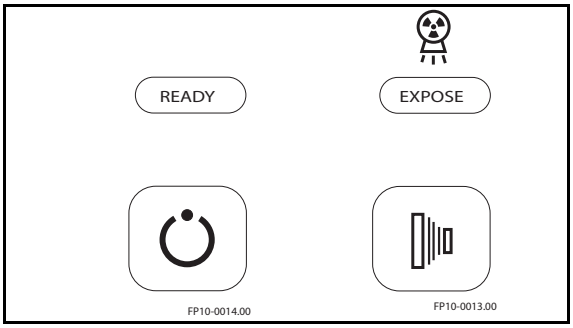

Figure 3-2. Prep and Exposure Buttons with indicator lights

3.3.4 Multi Function Buttons

Each multi function button is defined with text or symbols on the central display screen. An undefined button will have no effect when pressed. Pressing a defined button will either toggle through a choice of options or allow a technique factor to be modified by the rotational knob.

Symbols/text showing on top of the display

Symbol/Text	Description
kV	Pressing the button above this portion of the display will highlight the current value. The kV may be changed in single digit increments, using the rotational knob.
mAS	Pressing the button above this portion of the display will highlight the current value. The mAs may be changed in pre-determined steps, using the rotational knob. (2 point mode only).
mA	Pressing the button above this portion of the display will highlight the current value. The mA may be changed between 25 mA to 700 mA, using the rotational knob. (3 point mode only).
ms	Pressing the button above this portion of the display will highlight the current value. The exposure time may be changed in single digit increments using the rotational knob. (3 point mode only) Although values of time may be selected, the actual duration of the exposure will always be controlled by the mAs timer circuitry. The available Time selections (in seconds) are: .010, .012, .015, .020, .025, .030, .035, .040, .050, .060, .070, .080, .09, 0.1, 0.12, 0.15, 0.25, 0.3, 0.35, 0.4, 0.5, 0.6, 0.75, 0.9, 1.0, 1.25, 1.5, 1.75, 2.0, 2.5, 3.0, 4.0, 5.0, and 6.0.
2 POINT 3 POINT FP10-0017.00 2 POINT 3 POINT FP10-0018.00	**2 point or 3 Point mode** Pressing the button adjacent to these symbols in the display will toggle the current value between the 2 point (upper symbol) and 3 point (lower symbol) technique modes. In 2 point mode, the operator selects only the kV and mAs of an exposure. The mA is automatically calculated by the generator to produce the shortest exposure possible for the selected technique, while protecting the x-ray tube from overloads. In the 3 point mode, the operator must select the kV, mA, and Time of the exposure. The technique selections will be limited by the x-ray tube overload circuit. Disallowed techniques require the operator to manually readjust either the kV, mA, or Time of the technique, in order to perform the exposure within the tube's power limit.

Symbols showing to the left side of the display

Symbol/Text	Description
FP10-0025.00 FP10-0026.00	**Focal Spot Size** The focal spot size is pre-programmed to optimize the image quality. The left symbol indicates large focal spot and the right symbol indicates small focal spot.
FP10-0020.00 FP10-0021.00 NO BUCKY FP10-0019.00	**Image Receptor** Pressing the button adjacent to this portion of the display will toggle the current value between the Table (left symbol), Wall (right symbol) and No Bucky (lower symbol) locations. International symbols have been used to identify the Table and Wall receptors.
__ cm FP10-0022.00 __ cm FP10-0023.00	**Thickness** Pressing the button adjacent to this symbol will highlight the symbol (as lower symbol shows) and you will be able to set the thickness, in centimeter (cm), by turning the rotational knob. 1 cm = approximately 3/8”.
FP10-0024.00	**Patient Size** Pressing the button adjacent to this symbol in the display will toggle the current value between the small (left symbol), medium (middle symbol) and large (right symbol) patient size.

Symbols showing at the bottom of the display

Symbol/Text	Description
APR FP10-0015.00	**APR Operating Mode** Pressing the button adjacent to the APR symbol on the display (only shows when not in APR mode) will activate the APR mode of operation.
FP10-0016.00	**Manual Operating Mode** Pressing the button adjacent to the Manual symbol on the display (only shows when not in Manual mode) will activate the Manual mode of operation.
FP10-0030.00	**Go back** This symbol shows when error messages occur. Pressing the button adjacent to this symbol on the display will take you back to previous screen.

Symbol/Text	Description
	**AEC** **This shows that the AEC mode is active.**

Symbols/text showing in Administrator and/or Service Start-up mode

Symbol/Text	Description
Display Contrast	Pressing the button adjacent to this symbol in the display will highlight text and the contrast can be adjusted with the rotational knob.
Tube Select	Pressing the button adjacent to this symbol in the display will highlight text and the tube option can be altered to match the tube installed by using the rotational knob until the correct tube make and model shows in the display. See “X-ray Tube Assemblies” on page 1-17, for a complete list of available tube options.
Flash Options	Pressing the button adjacent to this symbol in the display will show you the options for transferring and storing APR data. **DFLT APR Data** (in Service Start-up mode only). Choose between Medical (MED) or Veterinarian (VET). **Export APR** (in Administrator and Service Start-up mode). **Import APR** (in Administrator and Service Start-up mode). **Reset APR Values** (in Administrator and Service Start-up mode). **Laptop Transfer** (in Administrator and Service Start-up mode).
Misc. Options	Pressing the button adjacent to this symbol in the display will let you change settings for Trouble shooting and running the control console in Demo mode. **Trouble shoot** **Demo mode**
Change Password	Pressing the button adjacent to this symbol in the display will let you choose a new four-digit password.

3.4 Power On/Off Procedure

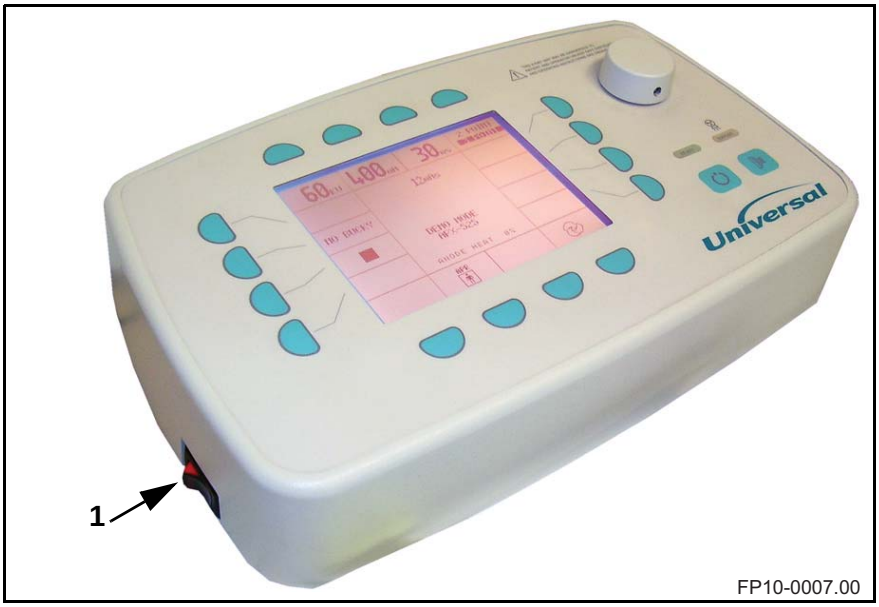

Figure 3-3. Control Console Power Switch

3.4.1 To Power Up The Anthem Generator:

1. Turn the main power disconnect switch to ON.
2. Turn the power switch (1 in Figure 3-3) of the Anthem control to ON.

Within a few seconds, all control panel indicators will illuminate, and an audible tone will sound during the Power Up Self Test.

When this Self Test is completed, the display screen will default to the predetermined mode of operation that was selected at the time of installation. The system is now ready for use.

3.4.2 To Power Down the Anthem Generator:

1. Turn the power switch (1) on the operator console to OFF.

If the generator will not be used for an extended period, set the main power disconnect switch to OFF.

3.5 Operating Modes

The Anthem can be operated in the following modes:

- Manual Mode (two or three point mode)
- APR Mode
- AEC Mode (optional)

3.5.1 Manual Mode (Two or Three Point Mode)

Two Point Mode

Operator controls kV and mAs of exposure. mA is automatically calculated by software to produce highest allowable tube current for shortest possible exposure, within limitations of the x-ray tube.

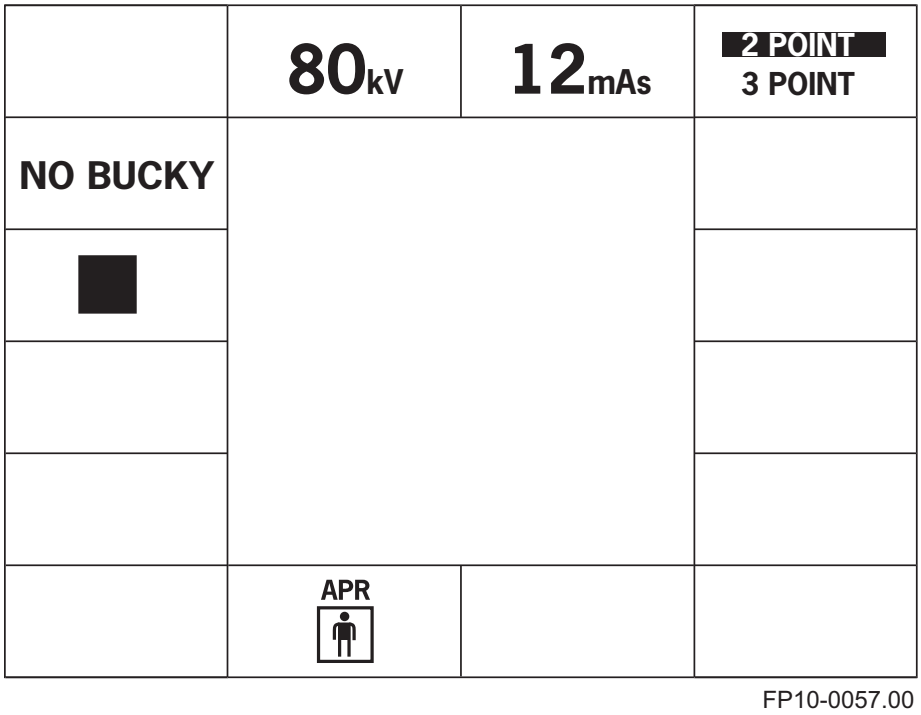

Figure 3-4. Two Point Operator's screen

Three Point Mode

Gives operator free selection of exposure techniques, including kV, mA, and Time. Additionally, the calculated mAs of the exposure will be displayed in the center portion of the LCD screen. Software will inhibit

selection of techniques that are beyond the limitations of the x-ray tube.

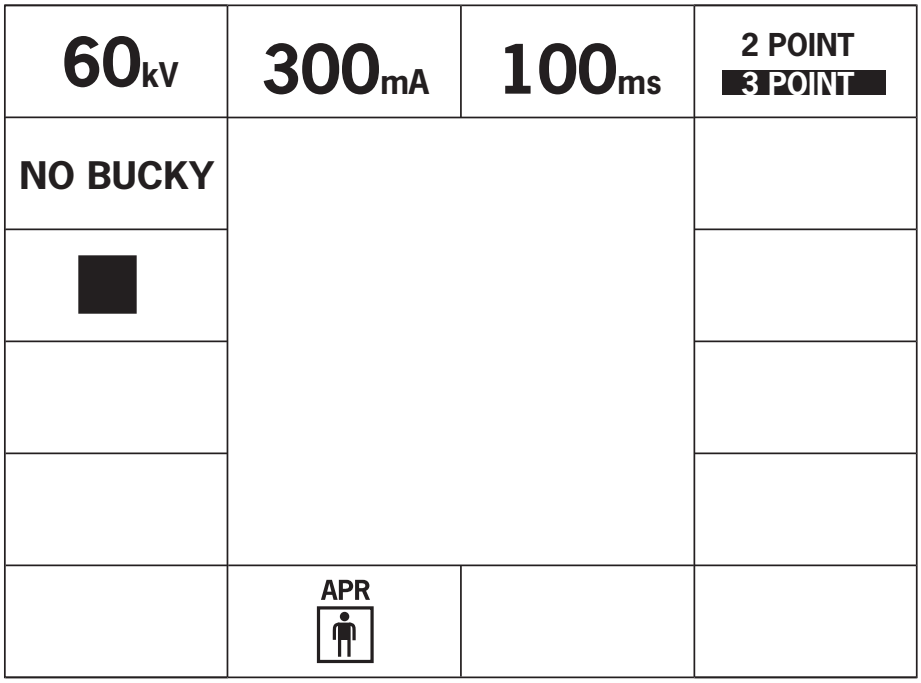

FP10-0058.00

Figure 3-5. Three Point Operator's screen

Manual Mode Selection

The Manual operation mode lets you custom set the technique parameters for:

- kV (all modes)
- mAs (two point only)
- Time (three point only)
- mA (three point only)
- Image receptor (Table, Wall, or None)

Note
You can not manually change the Focal Spot size. Small or Large Focal Spot is automatically chosen based on the currently chosen techniques. The symbol is shown to indicate the size only.

To modify any of these factors, press the multi function button closest to the name of that factor. If the function is kV, mAs, or exposure TIME, you can then change the displayed value with the rotational knob. For IMAGE RECEPTOR, press the associated button to toggle through the available selections. You can modify any factor by pressing its multi function button and continuing as above. (For exposure procedures see Prep and Expose.)

3.5.2 APR - Anatomically Programmable Radiography

You can select from up to twelve anatomic regions, with up to twelve different views per region, for a total of up to 96 different pre-programmed techniques, designed to optimize exposures for typical patient studies. The APR mode is designed to operate using the 3 point mode of operation only.

APR Mode Selection

You may select pre-programmed exposure techniques for up to 96 different patient studies, each of them optimized for the selected anatomic region and view. These techniques are also optimized for the rated power capability and x-ray tube installed in the generator.

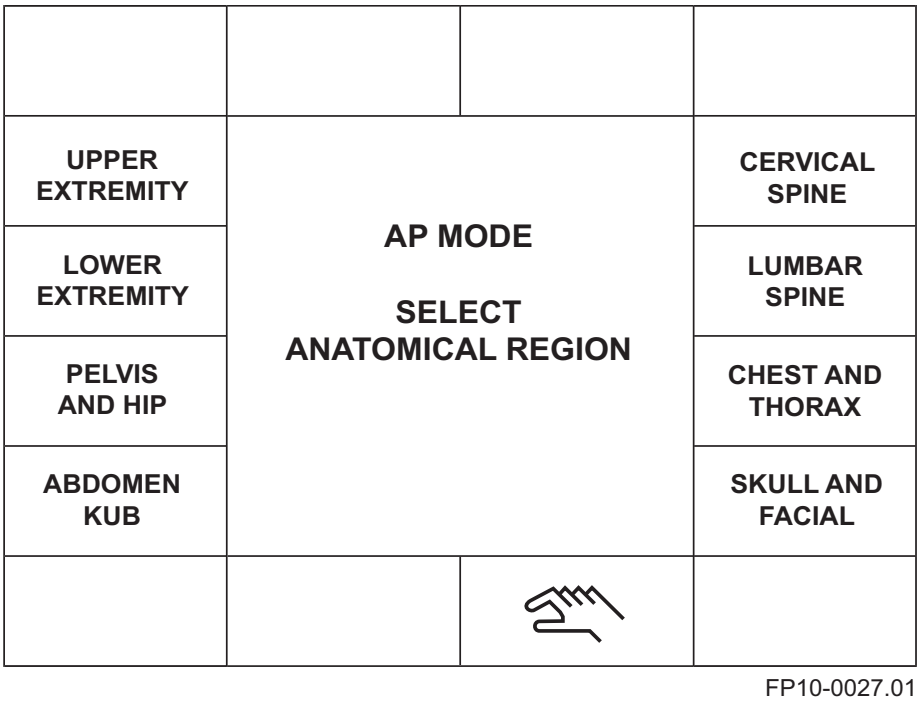

Figure 3-6. Initial APR screen (select anatomic region)

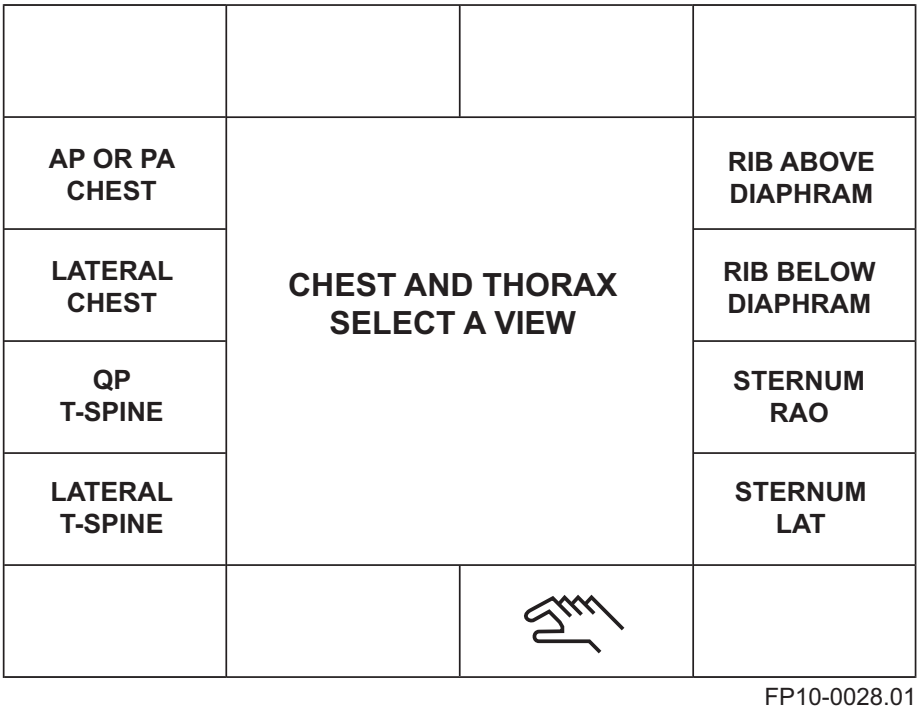

Figure 3-7. Second APR screen (chest & thorax selected - select view)

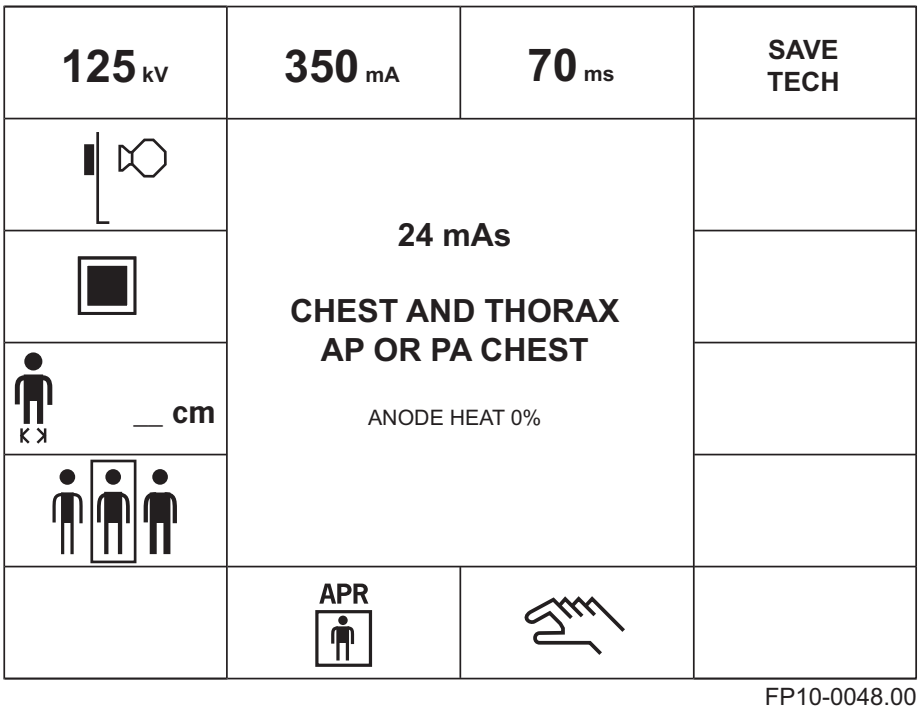

Figure 3-8. Third APR screen (AP or PA chest selected - save technique enabled)

Change and Save APR Techniques

The APR mode is designed to operate using the 3 point mode of operation only, but it can also be used in conjunction with the Del Medical Imaging AEC module. The basic operating characteristics for AEC in the APR mode are the same as has already been discussed in the AEC description.

The Anthem generator may also be programmed so that an operator can permanently save any APR technique using the SAVE TECH button, which will appear in the uppermost right hand corner of the screen, if the feature has been enabled.

The Anthem generator may also be programmed so that an operator can permanently save any APR technique using the SAVE TECH button, which will appear in the upper right hand corner of the screen, if the feature "Allow APR Updates" has been enabled.

Standard List of Anatomical Regions and Views

Anatomical region	View of region						
Upper Extremity	Finger	Hand/ Wrist	Forearm	Elbow	Humerus	Shoulder	Thoractic
Lower Extremity	Toe	Foot	Ankle	Knee	Femur	TIB/FIB AP	
Pelvis and Hip	AP Hip or Pelvis	Lateral Hip	AP Sacrum or Coccyx	LAT Sacrum or Coccyx			
Abdomen	AP Abdomen	AP Upright Abdomen	AP or Oblique KUB				
Cervical Spine	AP	Odontoid	Lateral/ Oblique	Swimmer			
Lumbar Spine	AP	Oblique	Lateral	L5-S1 Spot			
Chest and Thorax	AP Chest	Lateral Chest	AP T-Spine	Lateral T-Spine	Ribs Above Dia-phragm	Ribs Below Diaphragm	Sterum RAO/LAT
Skull and Facial	AP/PA or Caldwell	Townes Skull	Basilar Skull	Lateral Skull	AP/PA Facial Bones	Waters	Lateral Facial Bones

Table 3-1: Standard List of Anatomical Regions and Views

3.5.3 AEC – Automatic Exposure Control

Lets the operator select kV, Backup mAs, ion chamber fields, film/screen combinations, density, and image receptors.

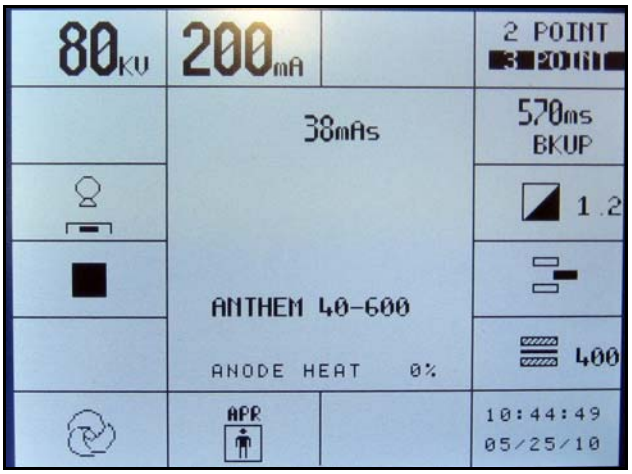

AEC Mode Operator's screen

AEC Mode Selection

The Universal Automatic Exposure Control, if installed, can be activated by pressing the <AEC> mode button.

When you select AEC, the following parameters are not displayed:

- Pre determined exposure time
- mAs

They are replaced by:

- Film / Screen Selection
- Ion Chamber Fields
- Film Density
- Back up mAs (or Time)
- kV

Pre programmed kV and Back up mAs values will be displayed. The mAs value must be set by the operator, using the rotational knob, and it should be about 2 to 3 times the expected mAs for the selected kV. Any technique parameter may be individually changed in the same manner as described previously.

You can access the various chamber field combinations by toggling the multi function button adjacent to the field display on the screen.

Film Screen Select gives you a choice of different film screen combinations. The film screen speeds may vary by site and are calibrated to the technologist's preference during the installation. The other film screen is select by pressing the associated multi function button.

Density refers to the optical density on the finished radiograph. You can select changes in density, ranging from 0.8 to 2.0, by pressing the associated multi function button and turning the knob to select the desired density.

(For exposure procedures see Prep and Expose.) Once the exposure is complete, the display will indicate the actual mAs and elapsed time of the exposure.

3.6 Setting Default Startup Parameters

Default startup techniques may be programmed by the operator in the following manner:

1. Start up the console in the Administrator Mode by depressing and holding the button at the lower left corner of the display screen while turning the generator ON. The default startup screen will appear as the generator is in its power up sequence.
2. You may now select the default settings for the following parameters:

- Startup mode (2 or 3 point mode or APR, optional AEC)
- Default 2 point kV
- Default 2 point mAs
- Default 3 point kV
- Default 3 point mA
- Default 3 point Time
- Default image receptor (Wall, Table, or None)
- Default screen contrast
- Flash Option*

To exit this screen and save your changes, press <exit>. The generator will now complete its power up sequence and default to your new settings.

*) *There is no default setting to be made for the Flash Option. This option is used for transferring the APR user database to a laptop or PC or to reset the default data. Instructions for adjusting the APR database are found in "Managing the APR database" on page 5-13.*

3.7 Taking Exposure

3.7.1 Prep and Expose in Two Point Manual Mode

Daily X-Ray Tube Seasoning Procedure

Follow the manufacturer's tube warm up procedure to extend the useful life of the x-ray tube. It is important to slowly warm the tube target before using it if the unit has been idle for three hours or longer.

X Ray Tube Anode Heat Display

The Anthem generator automatically calculates x ray tube anode heat loading and displays this value as a percentage of maximum kilo heat units (KHU), at the lower middle portion of the LCD display while performing exposures.

To make an exposure

1. Verify or change to manual mode by pressing the button adjacent to the hand symbol the bottom of the screen. If the hand symbol does not show, manual mode is already selected.
2. Select the Manual Two Point Mode by pressing the right top row button until two point mode is highlighted.
3. Verify or change the kV and/or mAs settings pressing their respective buttons and use the rotational knob to adjust the setting.
4. Press and hold down the PREP button.
5. When the green READY light turns on above the PREP button, continue holding down the PREP button while you press the EXPOSE button.
   When the exposure occurs, the yellow X-RAY light above the EXPOSE button will be illuminated and an audible tone will sound for the duration of the exposure.
6. Continue to hold down both buttons until the yellow x ray light goes out and the audible tone ends.

Note
Releasing either of the two buttons during an exposure will cause the exposure to terminate and a BUTTON FAULT error message to be displayed.

Fault Indication

If a fault occurs in your system you will get a fault condition message on your screen. Refer to Chapter 7 "Troubleshooting" for more details.

3.7.2 Prep and Expose in Three Point Manual Mode

Daily X-Ray Tube Seasoning Procedure

Follow the manufacturer's tube warm up procedure to extend the useful life of the x-ray tube. It is important to slowly warm the tube target before using it if the unit has been idle for three hours or longer.

X Ray Tube Anode Heat Display

The Anthem generator automatically calculates x ray tube anode heat loading and displays this value as a percentage of maximum kilo heat units (KHU), at the lower middle portion of the LCD display while performing exposures.

To make an exposure

1. Verify or change to manual mode by pressing the button adjacent to the hand symbol the bottom of the screen. If the hand symbol does not show, manual mode is already selected.
2. Select the Manual Three Point Mode by pressing the right top row button until three point mode is highlighted.
3. Verify or change the kV, mA and/or Time settings pressing their respective buttons and use the rotational knob to adjust the setting.
4. Press and hold down the PREP button.
5. When the green READY light turns on above the PREP button, continue holding down the PREP button while you press the EXPOSE button.
   When the exposure occurs, the yellow X-RAY light above the EXPOSE button will be illuminated and an audible tone will sound for the duration of the exposure.
6. Continue to hold down both buttons until the yellow x ray light goes out and the audible tone ends.

Note
Releasing either of the two buttons during an exposure will cause the exposure to terminate and a BUTTON FAULT error message to be displayed.

Fault Indication

If a fault occurs in your system you will get a fault condition message on your screen. Refer to Chapter 7 "Troubleshooting" for more details.

3.7.3 Prep and Expose in APR Mode

Daily X-Ray Tube Seasoning Procedure

Follow the manufacturer's tube warm up procedure to extend the useful life of the x-ray tube. It is important to slowly warm the tube target before using it if the unit has been idle for three hours or longer.

X Ray Tube Anode Heat Display

The Anthem generator automatically calculates x ray tube anode heat loading and displays this value as a percentage of maximum kilo heat units (KHU), at the lower middle portion of the LCD display while performing exposures.

To make an exposure

1. Select the APR Mode by pressing the button adjacent to the APR symbol the bottom of the screen. If the APR symbol does not show, APR mode is already selected.
2. Change or verify thickness by pressing the respective button and use the rotational knob to adjust the thickness.
3. Change or verify patient size by repeatedly pressing the respective button to toggle between small, medium or large patient.
4. Press and hold down the PREP button.
5. When the green READY light turns on above the PREP button, continue holding down the PREP button while you press the EXPOSE button.
   When the exposure occurs, the yellow X-RAY light above the EXPOSE button will be illuminated and an audible tone will sound for the duration of the exposure.
6. Continue to hold down both buttons until the yellow x ray light goes out and the audible tone ends.

Note
Releasing either of the two buttons during an exposure will cause the exposure to terminate and a BUTTON FAULT error message to be displayed.

Fault Indication

If a fault occurs in your system you will get a fault condition message on your screen. Refer to Chapter 7 "Troubleshooting" for more details.

3.7.4 Prep and Expose in AEC Mode

Daily X-Ray Tube Seasoning Procedure

Follow the manufacturer's tube warm up procedure to extend the useful life of the x-ray tube. It is important to slowly warm the tube target before using it if the unit has been idle for three hours or longer.

X Ray Tube Anode Heat Display

The Anthem generator automatically calculates x ray tube anode heat loading and displays this value as a percentage of maximum kilo heat units (KHU), at the lower middle portion of the LCD display while performing exposures.

To make an exposure

1. Press and hold down the PREP button
2. When the green READY light turns on above the PREP button, continue holding down the PREP button while you press the EXPOSE button.
   When the exposure occurs, the yellow X-RAY light above the EXPOSE button will be illuminated and an audible tone will sound for the duration of the exposure.
3. Continue to hold down both buttons until the yellow x ray light goes out and the audible tone ends.

Note
Releasing either of the two buttons during an exposure will cause the exposure to terminate and a BUTTON FAULT error message to be displayed.

Fault Indication

If a fault occurs in your system you will get a fault condition message on your screen. Refer to Chapter 7 "Troubleshooting" for more details.

3.8 Generator Exposure Tables

Table 3-2 to Table 3-4 shows mAs values resulting from preselected exposure time and mA values.

ME	mA Selected															
	25	50	75	100	150	200	250	300	350	400	450	500	550	600	650	700
10				1.00	1.50	2.00	2.50	3.00	3.50	4.00	4.50	5.00	5.50	6.00	6.50	7.00
11				1.10	1.65	2.20	2.75	3.30	3.85	4.40	4.95	5.50	6.05	6.60	7.15	7.70
12				1.20	1.80	2.40	3.00	3.60	4.20	4.80	5.40	6.00	6.60	7.20	7.80	8.40
13				1.30	1.95	2.60	3.25	3.90	4.55	5.20	5.85	6.50	7.15	7.80	8.45	9.10
15			1.13	1.50	2.25	3.00	3.75	4.50	5.25	6.00	6.75	7.50	8.25	9.00	9.75	10.50
17			1.28	1.70	2.55	3.40	4.25	5.10	5.95	6.80	7.65	8.50	9.35	10.20	11.05	11.90
20		1.00	1.50	2.00	3.00	4.00	5.00	6.00	7.00	8.00	9.00	10.00	11.00	12.00	13.00	14.00
22		1.10	1.65	2.20	3.30	4.40	5.50	6.60	7.70	8.80	9.90	11.00	12.10	13.20	14.30	15.40
25		1.25	1.88	2.50	3.75	5.00	6.25	7.50	8.75	10.00	11.25	12.50	13.75	15.00	16.25	17.50
27		1.35	2.03	2.70	4.05	5.40	6.75	8.10	9.45	10.80	12.15	13.50	14.85	16.20	17.55	18.90
30		1.50	2.25	3.00	4.50	6.00	7.50	9.00	10.50	12.00	13.50	15.00	16.50	18.00	19.50	21.00
32		1.60	2.40	3.20	4.80	6.40	8.00	9.60	11.20	12.80	14.40	16.00	17.60	19.20	20.80	22.40
35		1.75	2.63	3.50	5.25	7.00	8.75	10.50	12.25	14.00	15.75	17.50	19.25	21.00	22.75	24.50
37		1.85	2.78	3.70	5.55	7.40	9.25	11.10	12.95	14.80	16.65	18.50	20.35	22.20	24.05	25.90
40	1.00	2.00	3.00	4.00	6.00	8.00	10.00	12.00	14.00	16.00	18.00	20.00	22.00	24.00	26.00	28.00
45	1.13	2.25	3.38	4.50	6.75	9.00	11.25	13.50	15.75	18.00	20.25	22.50	24.75	27.00	29.25	31.50
50	1.25	2.50	3.75	5.00	7.50	10.00	12.50	15.00	17.50	20.00	22.50	25.00	27.50	30.00	32.50	35.00
55	1.38	2.75	4.13	5.50	8.25	11.00	13.75	16.50	19.25	22.00	24.75	27.50	30.25	33.00	35.75	38.50
60	1.50	3.00	4.50	6.00	9.00	12.00	15.00	18.00	21.00	24.00	27.00	30.00	33.00	36.00	39.00	42.00
65	1.63	3.25	4.88	6.50	9.75	13.00	16.25	19.50	22.75	26.00	29.25	32.50	35.75	39.00	42.25	45.50
70	1.75	3.50	5.25	7.00	10.50	14.00	17.50	21.00	24.50	28.00	31.50	35.00	38.50	42.00	45.50	49.00
75	1.88	3.75	5.63	7.50	11.25	15.00	18.75	22.50	26.25	30.00	33.75	37.50	41.25	45.00	48.75	52.50
80	2.00	4.00	6.00	8.00	12.00	16.00	20.00	24.00	28.00	32.00	36.00	40.00	44.00	48.00	52.00	56.00
85	2.13	4.25	6.38	8.50	12.75	17.00	21.25	25.50	29.75	34.00	38.25	42.50	46.75	51.00	55.25	59.50
90	2.25	4.50	6.75	9.00	13.50	18.00	22.50	27.00	31.50	36.00	40.50	45.00	49.50	54.00	58.50	63.00
95	2.38	4.75	7.13	9.50	14.25	19.00	23.75	28.50	33.25	38.00	42.75	47.50	52.25	57.00	61.75	66.50
100	2.50	5.00	7.50	10.00	15.00	20.00	25.00	30.00	35.00	40.00	45.00	50.00	55.00	60.00	65.00	70.00
110	2.75	5.50	8.25	11.00	16.50	22.00	27.50	33.00	38.50	44.00	49.50	55.00	60.50	66.00	71.50	77.00
120	3.00	6.00	9.00	12.00	18.00	24.00	30.00	36.00	42.00	48.00	54.00	60.00	66.00	72.00	78.00	84.00
125	3.13	6.25	9.38	12.50	18.75	25.00	31.25	37.50	43.75	50.00	56.25	62.50	68.75	75.00	81.25	87.50
130	3.25	6.50	9.75	13.00	19.50	26.00	32.50	39.00	45.50	52.00	58.50	65.00	71.50	78.00	84.50	91.00
135	3.38	6.75	10.13	13.50	20.25	27.00	33.75	40.50	47.25	54.00	60.75	67.50	74.25	81.00	87.75	94.50

mAs values vs. mA and time selected.

Table 3-2: mAs vs. mA and time selected (10 to 135 ms)

Table 3-3: mAs vs. mA and time selected (140 to 1660 ms)

TIME	mA Selected															
ms	25	50	75	100	150	200	250	300	350	400	450	500	550	600	650	700
140	3.5	7.0	10.5	14.0	21.0	28.0	35.0	42.0	49.0	56.0	63.0	70.0	77.0	84.0	91.0	98.0
150	3.8	7.5	11.3	15.0	22.5	30.0	37.5	45.0	52.5	60.0	67.5	75.0	82.5	90.0	97.5	105.0
165	4.1	8.3	12.4	16.5	24.8	33.0	41.3	49.5	57.8	66.0	74.3	82.5	90.8	99.0	107.3	115.5
175	4.4	8.8	13.1	17.5	26.3	35.0	43.8	52.5	61.3	70.0	78.8	87.5	96.3	105.0	113.8	122.5
180	4.5	9.0	13.5	18.0	27.0	36.0	45.0	54.0	63.0	72.0	81.0	90.0	99.0	108.0	117.0	126.0
190	4.8	9.5	14.3	19.0	28.5	38.0	47.5	57.0	66.5	76.0	85.5	95.0	104.5	114.0	123.5	133.0
200	5.0	10.0	15.0	20.0	30.0	40.0	50.0	60.0	70.0	80.0	90.0	100.0	110.0	120.0	130.0	140.0
225	5.6	11.3	16.9	22.5	33.8	45.0	56.3	67.5	78.8	90.0	101.3	112.5	123.8	135.0	146.3	157.5
250	6.3	12.5	18.8	25.0	37.5	50.0	62.5	75.0	87.5	100.0	112.5	125.0	137.5	150.0	162.5	175.0
275	6.9	13.8	20.6	27.5	41.3	55.0	68.8	82.5	96.3	110.0	123.8	137.5	151.3	165.0	178.8	192.5
300	7.5	15.0	22.5	30.0	45.0	60.0	75.0	90.0	105.0	120.0	135.0	150.0	165.0	180.0	195.0	210.0
325	8.1	16.3	24.4	32.5	48.8	65.0	81.3	97.5	113.8	130.0	146.3	162.5	178.8	195.0	211.3	227.5
350	8.8	17.5	26.3	35.0	52.5	70.0	87.5	105.0	122.5	140.0	157.5	175.0	192.5	210.0	227.5	245.0
375	9.4	18.8	28.1	37.5	56.3	75.0	93.8	112.5	131.3	150.0	168.8	187.5	206.3	225.0	243.8	262.5
400	10.0	20.0	30.0	40.0	60.0	80.0	100.0	120.0	140.0	160.0	180.0	200.0	220.0	240.0	260.0	280.0
450	11.3	22.5	33.8	45.0	67.5	90.0	112.5	135.0	157.5	180.0	202.5	225.0	247.5	270.0	292.5	315.0
500	12.5	25.0	37.5	50.0	75.0	100.0	125.0	150.0	175.0	200.0	225.0	250.0	275.0	300.0	325.0	350.0
550	13.8	27.5	41.3	55.0	82.5	110.0	137.5	165.0	192.5	220.0	247.5	275.0	302.5	330.0	357.5	385.0
600	15.0	30.0	45.0	60.0	90.0	120.0	150.0	180.0	210.0	240.0	270.0	300.0	330.0	360.0	390.0	420.0
675	16.9	33.8	50.6	67.5	101.3	135.0	168.8	202.5	236.3	270.0	303.8	337.5	371.3	405.0	438.8	472.5
700	17.5	35.0	52.5	70.0	105.0	140.0	175.0	210.0	245.0	280.0	315.0	350.0	385.0	420.0	455.0	490.0
750	18.8	37.5	56.3	75.0	112.5	150.0	187.5	225.0	262.5	300.0	337.5	375.0	412.5	450.0	487.5	525.0
800	20.0	40.0	60.0	80.0	120.0	160.0	200.0	240.0	280.0	320.0	360.0	400.0	440.0	480.0	520.0	560.0
825	20.6	41.3	61.9	82.5	123.8	165.0	206.3	247.5	288.8	330.0	371.3	412.5	453.8	495.0	536.3	577.5
900	22.5	45.0	67.5	90.0	135.0	180.0	225.0	270.0	315.0	360.0	405.0	450.0	495.0	540.0	585.0	
950	23.8	47.5	71.3	95.0	142.5	190.0	237.5	285.0	332.5	380.0	427.5	475.0	522.5	570.0		
1000	25.0	50.0	75.0	100.0	150.0	200.0	250.0	300.0	350.0	400.0	450.0	500.0	550.0	600.0		
1120	28.0	56.0	84.0	112.0	168.0	224.0	280.0	336.0	392.0	448.0	504.0	560.0				
1250	31.3	62.5	93.8	125.0	187.5	250.0	312.5	375.0	437.5	500.0	562.5					
1370	34.3	68.5	102.8	137.0	205.5	274.0	342.5	411.0	479.5	548.0						
1500	37.5	75.0	112.5	150.0	225.0	300.0	375.0	450.0	525.0	600.0						
1660	41.5	83.0	124.5	166.0	249.0	332.0	415.0	498.0	581.0							

mAs values vs. mA and time selected.

Table 3-4: mAs vs. mA and time selected (1750 to 6000 ms)

ME	mA Selected															
s	25	50	75	100	150	200	250	300	350	400	450	500	550	600	650	700
1750	43.8	87.5	131.3	175.0	262.5	350.0	437.5	525.0								
1875	46.9	93.8	140.6	187.5	281.3	375.0	468.8	562.5								
2000	50.0	100.0	150.0	200.0	300.0	400.0	500.0	600.0								
2250	56.3	112.5	168.8	225.0	337.5	450.0	562.5									
2500	62.5	125.0	187.5	250.0	375.0	500.0										
2750	68.8	137.5	206.3	275.0	412.5	550.0										
3000	75.0	150.0	225.0	300.0	450.0	600.0										
3500	87.5	175.0	262.5	350.0	525.0											
4000	100.0	200.0	300.0	400.0	600.0											
4500	112.5	225.0	337.5	450.0												
5000	125.0	250.0	375.0	500.0												
5500	137.5	275.0	412.5	550.0												
6000	150.0	300.0	450.0	600.0												

mAs values vs. mA and time selected.

3.9 Specification

Configuration: Model Anthem 30-400; 30 kW, 400mA, single phase

General	
Input power	208/240 VAC, 1-phase, 1 A Continuous, 210 A/180 A Momentary, 50/60 Hz
Output power	30 kW, 400 mA For lock: 24VDC, 4A For manual collimator: 24VAC, 8A, 50/60 HZ, 10% Duty For bucky: 120VAC, 1A, 50/60 HZ Room in use light (for X-ray Indicator): Normally open relay contact, max contact rating 10A at 240VAC
Mode of Operation	Continous with intermittent loading (1% duty cycle)
Temperature Limits	Transit/Storage — Operating – 40° F to +158° F — +50° F to +95° F – 40° C to +70° C — +10° C to +35° C
Relative Humidity Limits	Transit/Storage — Operating 10% to 100% — 10%-80% Non-Condensing
Atmospheric Limits	14.5 inHg to 30.74 inHg 500 hPa to 1060 hPA
Weight	344 lb. (including shipping crate)
Degree of protection against ingress of water	Ordinary
Certifications	Medical Equipment With respect to electrical hazards only in accordance with UL60601-1, CAN/CSA C22.2 No. 601.1, IEC60601-1, IEC60601-2-7
Maximum power technique	75 kV, 400 mA
Line regulation	+/- 7%
Duty Cycle	1%
kV Selection	40 to 125 kV in increments of 1 kV
kV Accuracy	Indicated value +/- 5%
mAs Selection	1 - 500 mAs, increments of 1.2 x previous value
mAs Accuracy	+/- (.6 mAs + 5% of indicated value)
mA Selection	25 - 400mA
mA Accuracy	Indicated value +/- 10%
Time Selection	10 milliseconds to 6 seconds, in 77 steps
Time Accuracy	+/- 10%
Technique Factor Max Line Current	75 kV, 400 mA, 200ms
Regulatory	Meets the requirements of 21 CFR Sub Chapter J.

Configuration: Model Anthem 30-500; 30 kW, 500mA, single phase

General	
Input power	208/240 VAC, 1-phase, 1 A Continuous, 226 A/195 A Momentary, 50/60 Hz
Output power	30 kW, 500mA For lock: 24VDC, 4A For manual collimator: 24VAC, 8A, 50/60 HZ, 10% Duty For bucky: 120VAC, 1A, 50/60 HZ Room in use light (for X-ray Indicator): Normally open relay contact, max contact rating 10A at 240VAC
Mode of Operation	Continous with intermittent loading (1% duty cycle)
Temperature Limits	Transit/Storage — Operating – 40° F to +158° F — +50° F to +95° F – 40° C to +70° C — +10° C to +35° C
Relative Humidity Limits	Transit/Storage — Operating 10% to 100% — 10%-80% Non-Condensing
Atmospheric Limits	14.5 inHg to 30.74 inHg 500 hPa to 1060 hPA
Weight	344 lb. (including shipping crate)
Degree of protection against ingress of water	Ordinary
Certifications	CLASSIFIED C UL US 20VM Medical Equipment With respect to electrical hazards only in accordance with UL60601-1, CAN/CSA C22.2 No. 601.1, IEC60601-1, IEC60601-2-7
Maximum power technique	60 kV, 500 mA
Line regulation	+/- 7%
Duty Cycle	1%
kV Selection	40 to 125 kV in increments of 1 kV
kV Accuracy	Indicated value +/- 5%
mAs Selection	1 - 500 mAs, increments of 1.2 x previous value
mAs Accuracy	+/- (.6 mAs + 5% of indicated value)
mA Selection	25 - 500 mA
mA Accuracy	Indicated value +/- 10%
Time Selection	10 milliseconds to 6 seconds, in 77 steps
Time Accuracy	+/- 10%
Technique Factor Max Line Current	60 kV, 500 mA, 200 mS
Regulatory	Meets the requirements of 21 CFR Sub Chapter J.

Configuration: Model Anthem 40-500; 40 kW, 500mA, single phase

General	
Input power	208/240 VAC, 1-phase, 1 A Continuous, 256 A/222 A Momentary, 50/60 Hz
Output power	40 kW, 500mA For lock: 24VDC, 4A For manual collimator: 24VAC, 8A, 50/60 HZ, 10% Duty For bucky: 120VAC, 1A, 50/60 HZ Room in use light (for X-ray Indicator): Normally open relay contact, max contact rating 10A at 240VAC
Mode of Operation	Continous with intermittent loading (1% duty cycle)
Temperature Limits	Transit/Storage — Operating – 40° F to +158° F — +50° F to +95° F – 40° C to +70° C — +10° C to +35° C
Relative Humidity Limits	Transit/Storage — Operating 10% to 100% — 10%-80% Non-Condensing
Atmospheric Limits	14.5 inHg to 30.74 inHg 500 hPa to 1060 hPA
Weight	344 lb. (including shipping crate)
Degree of protection against ingress of water	Ordinary
Certifications	Medical Equipment With respect to electrical hazards only in accordance with UL60601-1, CAN/CSA C22.2 No. 601.1, IEC60601-1, IEC60601-2-7
Maximum power technique	80 kV, 500 mA
Line regulation	+/- 7%
Duty Cycle	1%
kV Selection	40 to 125 kV in increments of 1 kV
kV Accuracy	Indicated value +/- 5%
mAs Selection	1 - 500 mAs, increments of 1.2 x previous value
mAs Accuracy	+/- (.6 mAs + 5% of indicated value)
mA Selection	25 - 500 mA
mA Accuracy	Indicated value +/- 10%
Time Selection	10 milliseconds to 6 seconds, in 77 steps
Time Accuracy	+/- 10%
Technique Factor Max Line Current	80 kV, 500 mA, 200 mS
Regulatory	Meets the requirements of 21 CFR Sub Chapter J.

Configuration: Model Anthem 32-500; 32 kW, 500mA, 3-phase

General	
Input power	208/240/380/480 VAC, 3-phase, 1 A Continuous, 158 A/136 A/86 A/68 A Momentary, 50/60 Hz
Output power	32 kW, 500 mA For lock: 24VDC, 4A For manual collimator: 24VAC, 8A, 50/60 HZ, 10% Duty For bucky: 120VAC, 1A, 50/60 HZ Room in use light (for X-ray Indicator): Normally open relay contact, max contact rating 10A at 240VAC
Mode of Operation	Continous with intermittent loading (1% duty cycle)
Temperature Limits	Transit/Storage — Operating – 40° F to +158° F — +50° F to +95° F – 40° C to +70° C — +10° C to +35° C
Relative Humidity Limits	Transit/Storage — Operating 10% to 100% — 10%-80% Non-Condensing
Atmospheric Limits	14.5 inHg to 30.74 inHg 500 hPa to 1060 hPA
Weight	368 lb. (including shipping crate)
Degree of protection against ingress of water	Ordinary
Certifications	CLASSIFIED C UL US 20VM Medical Equipment With respect to electrical hazards only in accordance with UL60601-1, CAN/CSA C22.2 No. 601.1, IEC60601-1, IEC60601-2-7
Maximum power technique	64 kV, 500 mA
Line regulation	+/- 7%
Duty Cycle	1%
kV Selection	40 to 125 kV in increments of 1 kV
kV Accuracy	Indicated value +/- 5%
mAs Selection	1 - 600 mAs, increments of 1.2 x previous value
mAs Accuracy	+/- (.6 mAs + 5% of indicated value)
mA Selection	25 - 500 mA
mA Accuracy	Indicated value +/- 10%
Time Selection	10 milliseconds to 6 seconds, in 77 steps
Time Accuracy	+/- 10%
Technique Factor Max Line Current	64 kV, 500 mA, 100 ms
Regulatory	Meets the requirements of 21 CFR Sub Chapter J.

Configuration: Model Anthem 40-600; 40 kW, 600mA, 3-phase

General	
Input power	208/240/380/480 VAC, 3-phase, 1 A Continuous, 161 A/142 A/90 A/72 A Momentary, 50/60 Hz
Output power	40 kW, 600 mA For lock: 24VDC, 4A For manual collimator: 24VAC, 8A, 50/60 HZ, 10% Duty For bucky: 120VAC, 1A, 50/60 HZ Room in use light (for X-ray Indicator): Normally open relay contact, max contact rating 10A at 240VAC
Mode of Operation	Continous with intermittent loading (1% duty cycle)
Temperature Limits	Transit/Storage — Operating – 40° F to +158° F — +50° F to +95° F – 40° C to +70° C — +10° C to +35° C
Relative Humidity Limits	Transit/Storage — Operating 10% to 100% — 10%-80% Non-Condensing
Atmospheric Limits	14.5 inHg to 30.74 inHg 500 hPa to 1060 hPA
Weight	368 lb. (including shipping crate)
Degree of protection against ingress of water	Ordinary
Certifications	Medical Equipment With respect to electrical hazards only in accordance with UL60601-1, CAN/CSA C22.2 No. 601.1, IEC60601-1, IEC60601-2-7
Maximum power technique	100 kV, 400 mA
Line regulation	+/- 7%
Duty Cycle	1%
kV Selection	40 to 125 kV in increments of 1 kV
kV Accuracy	Indicated value +/- 5%
mAs Selection	1 - 600 mAs, increments of 1.2 x previous value
mAs Accuracy	+/- (.6 mAs + 5% of indicated value)
mA Selection	25 - 600 mA
mA Accuracy	Indicated value +/- 10%
Time Selection	10 milliseconds to 6 seconds, in 77 steps
Time Accuracy	+/- 10%
Technique Factor Max Line Current	100 kV, 400 mA, 250 ms
Regulatory	Meets the requirements of 21 CFR Sub Chapter J.

Configuration: Model Anthem 50-650; 50 kW, 650mA, 3-phase

General	
Input power	208/240/380/480 VAC, 3-phase, 1 A Continuous, 200 A/176 A/110 A/88 A Momentary, 50/60 Hz
Output power	50 kW, 650 mA For lock: 24VDC, 4A For manual collimator: 24VAC, 8A, 50/60 HZ, 10% Duty For bucky: 120VAC, 1A, 50/60 HZ Room in use light (for X-ray Indicator): Normally open relay contact, max contact rating 10A at 240VAC
Mode of Operation	Continous with intermittent loading (1% duty cycle)
Temperature Limits	Transit/Storage — Operating – 40° F to +158° F — +50° F to +95° F – 40° C to +70° C — +10° C to +35° C
Relative Humidity Limits	Transit/Storage — Operating 10% to 100% — 10%-80% Non-Condensing
Atmospheric Limits	14.5 inHg to 30.74 inHg 500 hPa to 1060 hPA
Weight	368 lb. (including shipping crate)
Degree of protection against ingress of water	Ordinary
Certifications	CLASSIFIED C UL US 20VM Medical Equipment With respect to electrical hazards only in accordance with UL60601-1, CAN/CSA C22.2 No. 601.1, IEC60601-1, IEC60601-2-7
Maximum power technique	100 kV, 500 mA
Line regulation	+/- 7%
Duty Cycle	1%
kV Selection	40 to 125 kV in increments of 1 kV
kV Accuracy	Indicated value +/- 5%
mAs Selection	1 - 600 mAs, increments of 1.2 x previous value
mAs Accuracy	+/- (.6 mAs + 5% of indicated value)
mA Selection	25 - 650 mA
mA Accuracy	Indicated value +/- 10%
Time Selection	10 milliseconds to 6 seconds, in 77 steps
Time Accuracy	+/- 10%
Technique Factor Max Line Current	100 kV, 500 mA, 200 ms
Regulatory	Meets the requirements of 21 CFR Sub Chapter J.

AEC Specifications:

General	
Post Exposure Indicator	Digutal Readout on mAs
Film Screen Selection	Six Different Film-Screen Combinations
AEC Density Control	13 Steps from 0.8 to 2.0
Fault Indicator	For Backup mAs and Generator Termination
Default Termination	Operator Selectable
kV Compensation	Three Calibration Points, 60, 90, 110 kV
SID Range	36 to 72 Inches (91.44 cm to 182.88 cm)
Ion Chamber/Preamplifier: Ion Chamber Voltage: Input Voltage: Sensitivity: Maximum Output: Linearity:	 200 VDC +/-5% Internally Generated +12VDC, -12VDC Film Screen Combinations 100-500 8.5 VDC +/-5%
Field Sizes: Center Field: Left/Right:	 2” x 4.4” (5.08 cm x 11.17 cm) 2.2” x 3.6” (5.58 cm x 9.14 cm)

Periodic Maintenance

4

4.1 Periodic Maintenance Schedule

Maintenance procedures for the Anthem X-ray generator are required within 30 days after completion of the installation and every 6 months thereafter. Safe equipment performance also requires the use of service personnel who are specifically trained and experienced with medical x ray apparatus. Applicable preventive maintenance or any repair service should be performed only by these skilled individuals.

Refer to the schedule on next page for information on when to perform periodic maintenance on the generator.

Note
This piece of X-ray equipment contains operating safeguards to insure maximum safety. Aside from routine maintenance, any abnormal noise, vibration or unusual performance should be investigated by a qualified service engineer. Before requesting service, however, be sure the equipment is being operated in accordance with the foregoing instructions.

Warning

The main capacitor bank (located on the left side of the Power Module) contains a very high charge when power is applied. This charge is a fatal shock hazard. After power has been disconnected from the system, with power off, allow a minimum of 15 minutes for the capacitor bank to discharge or follow the "Discharge Procedure" on page 4-3. Check the capacitor bank for zero volts with a DC voltmeter before working on any internal circuitry.

Personnel engaged in maintenance activities should exercise normal caution and care while working with electro mechanical equipment. Before removing or opening any electrical power panels or covers, verify that the incoming power supply is turned OFF.

Warning

In the event maintenance procedures require power to be supplied to the unit, extreme care MUST be exercised to insure the safety of service and any other personnel in the area. Always verify that the equipment is properly grounded before attempting any electrical operation or adjustment.

Warning

Certain tests require the production of X-rays. Field personnel should take precautions to ensure their personal safety and the safety of others in close proximity. Minimum precautions are as follows:
- wear lead aprons
- personnel remaining in the X-ray room during exposure should be behind a lead shield
- minimize radiation scatter through doorways, walls and floor

Note
Due to varying operating conditions, the procedures listed on next page below may have to be performed at greater or lesser intervals. You may have to adjust intervals according to your generator's performance.

4.1.1 Discharge Procedure

When ever you are performing maintenance, repair, or service on the generator that requires you to open the upper or lower cabinet you must always make sure the unit is discharged. Discharge the generator as follows:

1. Enter service mode by pressing and holding button (1 in Figure 4-1) while switching the power switch (2) ON.

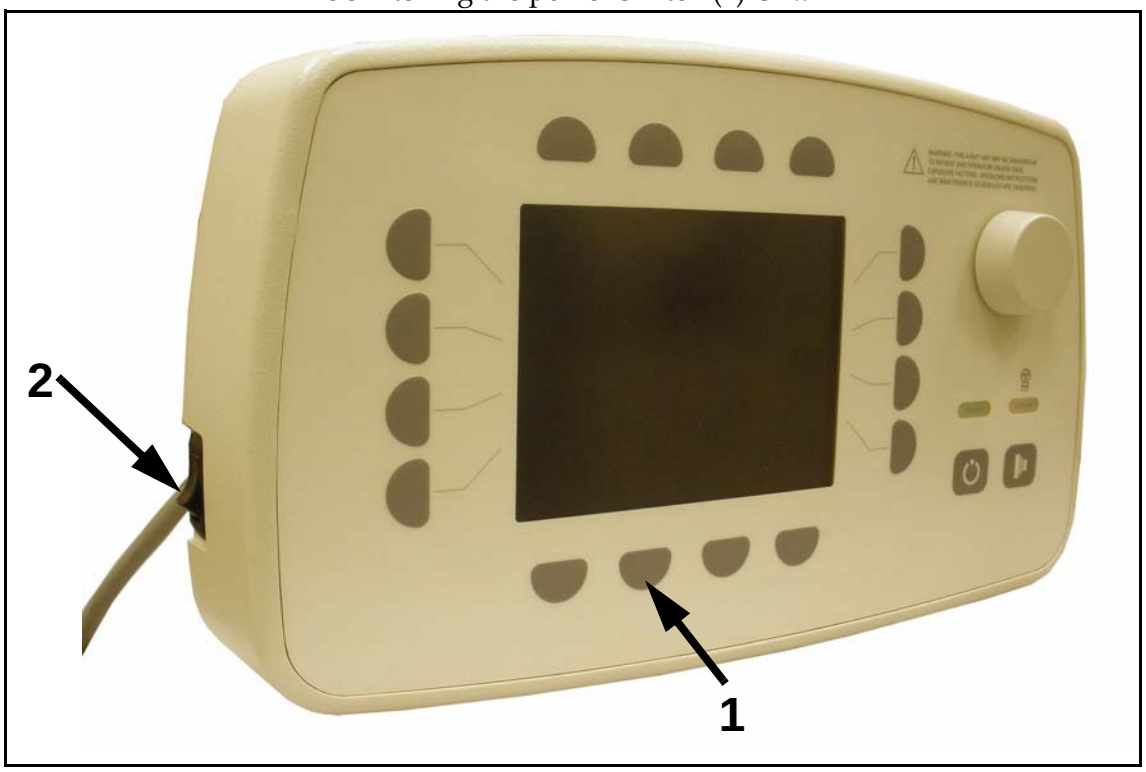

Figure 4-1. Entering Service Mode

2 Enter password. The password is entered by pressing each password button (1 in Figure 4-2) while turning dial (2) until desired digit is shown in display. Then press OK button (3).

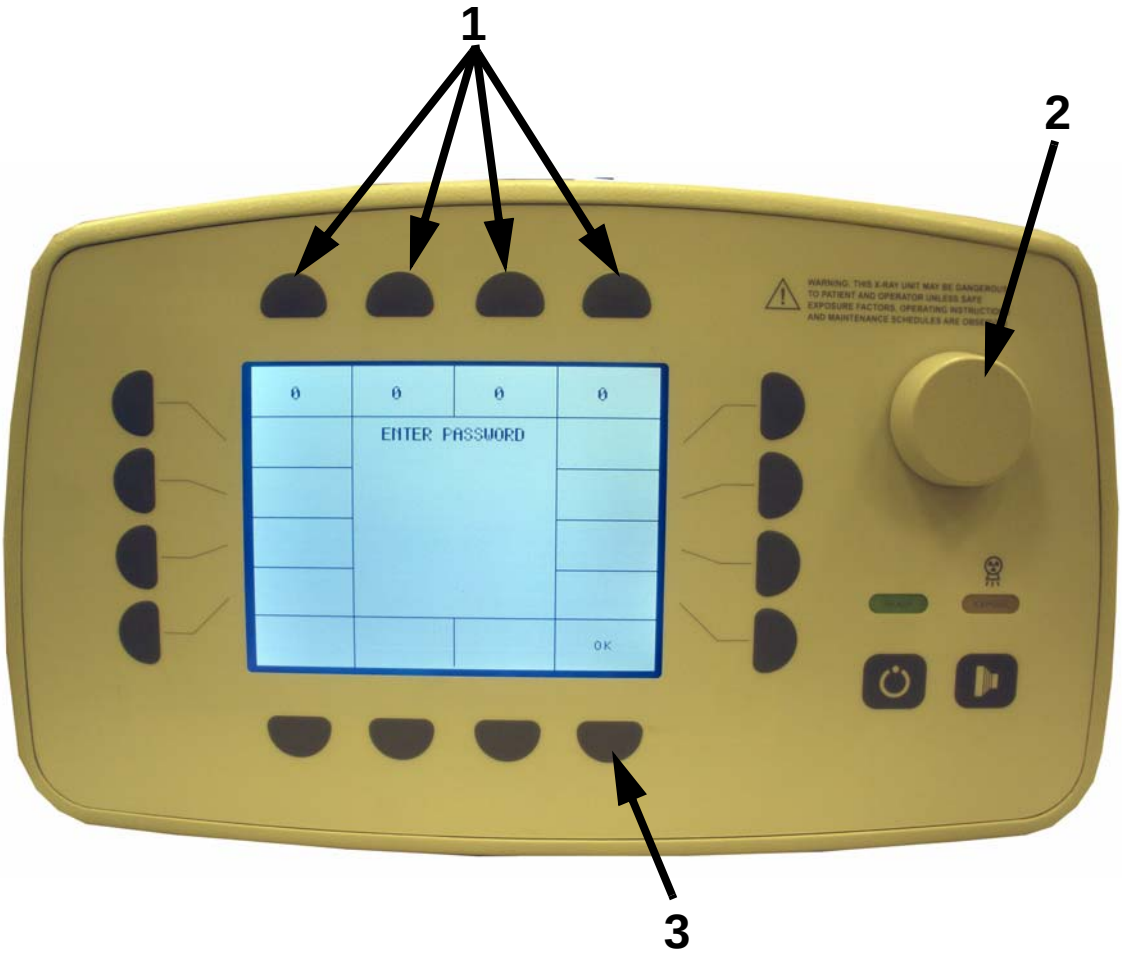

Figure 4-2. Entering Password

3 Press CALIBRATE button (1 in Figure 4-3).

Figure 4-3. Calibrate Button

4 Press DISCHARGE CAPS button (1 in Figure 4-4).

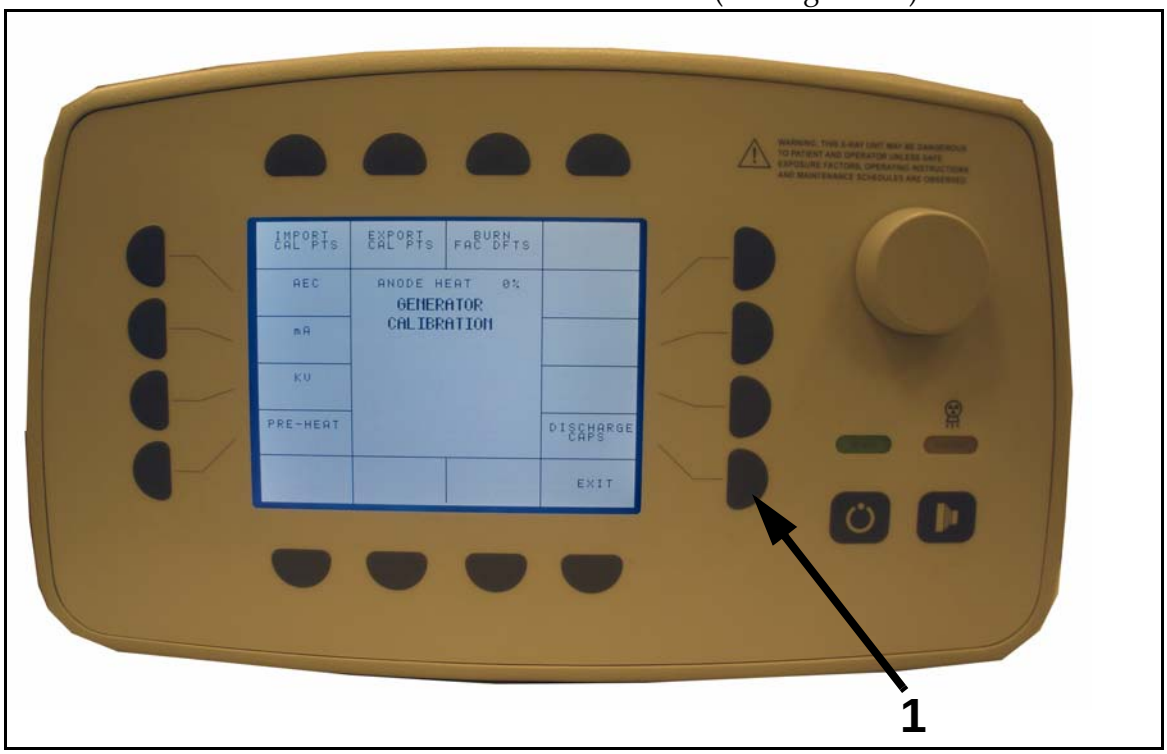

Figure 4-4. Discharge Caps Button

5 Take five exposures.

6 Open the upper cabinet and measure the voltage across the terminals (1 in Figure 4-5) at capacitor C1. If voltage is 10V or higher, take two more exposures and then verify voltage across the bus again.

7 When the voltage is below 10V it is ok to continue with the maintenance/repair/service work on the generator.

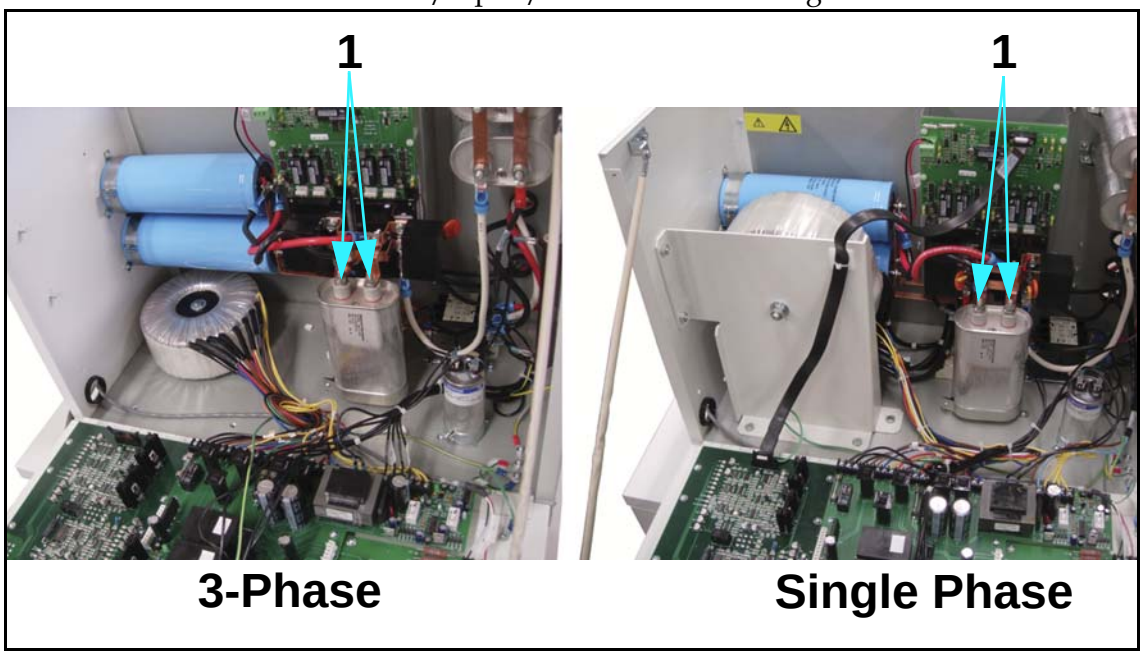

Figure 4-5. Capacitor C1

4.1.2 Maintenance Schedule

What to Do	When to Do It	Refer to Section
Clean External Surfaces.	Every Week or as Required	“Cleaning External Surfaces” on page 4-8.
Check Electrical Cabling.	Every 6 Months	“Checking Electrical Cabling” on page 4-10.
Inspect and Re-grease HT Cables.	Every 6 Months	“Inspecting and Re-grease HT Cables” on page 4-11.
Verify Tube Insert.	Every 6 Months	“Verifying Tube Insert” on page 4-12.
Inspect Connections.	Every 6 Months	“Inspecting Connections” on page 4-13.
Verify Accuracy of kV, mAs and mA.	Every 6 Months	“Verifying Accuracy of kV, mAs and mA” on page 4-14.
Inspect Electromechanical Connectors.	Every 6 Months	“Inspecting Electromechanical Contactors” on page 4-16.
Check High Voltage Transformer.	Every 6 Months	“Checking High Voltage Transformer” on page 4-17.
Check Audible and Visual Exposure Indicators.	Every 6 Months	“Checking Audible and Visual Exposure Indicators” on page 4-18.
Check Fasteners for Tightness.	Every 6 Months	“Checking Fasteners for Tightness” on page 4-19.
Calibrate AEC (Option)	Every 6 months	“AEC Calibration Procedure” on page 5-24

Table 4-1: Periodic Maintenance Schedule

4.2 Cleaning External Surfaces

Tools Required

- cleaning wipes
- non-abrasive, hospital-grade cleaner

Use cleaning wipes and non-abrasive, hospital-grade cleaner to clean external surfaces of the generator.

Warning

Turn off all electrical power to the generator. Also, make sure that power source is locked out and tagged "Equipment Being Serviced" before servicing the generator. You could get seriously injured if you do not.

Warning

This equipment is NOT classified as anaesthetic-proof and may ignite inflammable anesthetics. Flammable agents used for skin cleaning or disinfecting may also produce an explosion hazard.

- Ensure the power has been disconnected and that the emergency switches have been activated, before starting any cleaning operation.
- Ensure no liquid gets into the unit.
- Do not immerse the equipment, including any components or accessories, in liquid.
- Do not autoclave the equipment, including any component or accessories.
- Do not use water. Water can short-circuit the electrical installation and cause corrosion to mechanical parts.
- Do not use acid or abrasive products.
- Use only a dry cloth to clean chrome-plated parts.
- Only the surface areas of unit parts, including accessories and connection cables, should be disinfected using a gaseous disinfectant. For safety reasons, do not spray disinfectants.
- Clean painted parts with a cloth and products appropriate for cleaning plastic materials; after cleaning wipe the surfaces with a clean, dry cloth.

- Do not spray cleaning or disinfection solution directly on the equipment. To disinfect, moisten a cloth with a 70% Isopropyl alcohol solution or equivalent and wipe the surface of the equipment.
- When disinfecting the examination room, ensure the unit is covered with plastic sheets.

4.3 Checking Electrical Cabling

Tools Required

- phillips screw driver

Warning

Turn off all electrical power to the generator. Also, make sure that power source is locked out and tagged "Equipment Being Serviced" before servicing the generator. You could get seriously injured if you do not.

Warning

Never perform any maintenance, repair, or service work inside the generator without first having performed the discharge procedure as described in "Checking Electrical Cabling" on page 4-10.

- Inspect all accessible cables for fraying or abrasion. Replace if necessary.

4.4 Inspecting and Re-grease HT Cables

Tools Required

- phillips screw driver

Warning

Turn off all electrical power to the generator. Also, make sure that power source is locked out and tagged "Equipment Being Serviced" before servicing the generator. You could get seriously injured if you do not.

Warning

Never perform any maintenance, repair, or service work inside the generator without first having performed the discharge procedure as described in "Discharge Procedure" on page 4-3.

1. Open lower cabinet front panel.
2. Remove high tension cables, clean and re-grease with vapor-proof compound.
3. Reinsert high tension jacks into federal receptacles. Insure cables are well seated and pins make good contact. Carefully spread pins with pocketknife if necessary, and re-seat cables.
4. Repeat 2 and 3 on the tube end of the cables.

4.5 Verifying Tube Insert

Tools Required

- phillips screw driver

Warning

Turn off all electrical power to the generator. Also, make sure that power source is locked out and tagged "Equipment Being Serviced" before servicing the generator. You could get seriously injured if you do not.

Warning

Never perform any maintenance, repair, or service work inside the generator without first having performed the discharge procedure as described in "Discharge Procedure" on page 4-3.

1 Verify that insert of tube matches tube insert selected in the system installation file. If it does not, call Del Medical Technical Support.

4.6 Inspecting Connections

Tools Required

- phillips screw driver

Warning

Turn off all electrical power to the generator. Also, make sure that power source is locked out and tagged "Equipment Being Serviced" before servicing the generator. You could get seriously injured if you do not.

Warning

Never perform any maintenance, repair, or service work inside the generator without first having performed the discharge procedure as described in "Discharge Procedure" on page 4-3.

Caution

Always use an anti-static wrist strap when working on electrostatic sensitive devices.

1. Open power module front panel.
2. Inspect for loose or corroded connections. Refit or replace if needed.
3. Check all circuit boards and wiring harness plugs to assure they are all well seated in their proper receptacles.

4.7 Verifying Accuracy of kV, mAs and mA

Tools Required

- Phillips screw driver
- Dual trace storage oscilloscope (recommended)
- Digital Multimeter (minimum requirements)
- Dynalyzer™ (optional)

Warning

Turn off all electrical power to the generator. Also, make sure that power source is locked out and tagged "Equipment Being Serviced" before servicing the generator. You could get seriously injured if you do not.

Warning

Never perform any maintenance, repair, or service work inside the generator without first having performed the discharge procedure as described in "Discharge Procedure" on page 4-3.

1. Make sure that the Main disconnect is OFF.
2. Connect channel 1 and 2 on the oscilloscope as listed below. All test points (TP) are on Main Control board.

Channel	Probe	Ground lead
1	to TP6A (kv)	TP22A
2	to TP47A (mA)	to TP22B

Oscilloscope settings

3. Set the oscilloscope as follows:

Channel	#1
Vertical	2 V/div.
Horizontal	10 ms/div.
Mode	Normal Sweep
Trigger	Channel 1 - Positive

Channel	#2
Vertical	1 V/div.
Horizontal	10 ms/div.
Mode	Normal Sweep

Note:
If perform calibration using only scope, value of kV and mA can be read from scope as follow:

From Channel #1:
For kV: 1 V = 20 kV

From Channel #2:
For mA, small spot: 1 V = 20 mA
For mA, Large spot: 1 V = 100 mA

Dynalyzer display settings

4 If you use a Dynalyzer, set the Dynalyzer display as follows:

kVp	A + C
mA/mAs Display	mA
Fil. Amps/Line	Fil. Amps.
Trigger Source	kVp
kV Delay	3.3 msec
Window Delay	Off
Procedure	Normal
Trigger Mode	Percent
Trigger Level	75%
Printer	Off

5 In 3 point mode set kV=75, mA=200, and ms=50.

Warning

When taking exposures for test and/or verification purposes make sure to follow the specific safety routines and regulations on site.

6 Take a test exposure and verify that the kV is within +/- 5% of indicated value and the mA is within +/- 10% of indicated value). If either kV or mA are outside the range, calibrate per instructions in “Calibration Procedure” on page 5-2.

4.8 Inspecting Electromechanical Contactors

Tools Required

- medium-size phillips screw driver
- medium-size flat head screw driver
- set of open end wrenches

Warning

Turn off all electrical power to the generator. Also, make sure that power source is locked out and tagged "Equipment Being Serviced" before servicing the generator. You could get seriously injured if you do not.

Warning

Never perform any maintenance, repair, or service work inside the generator without first having performed the discharge procedure as described in "Discharge Procedure" on page 4-3.

Caution

Always use an anti-static wrist strap when working on electrostatic sensitive devices.

1. Inspect electromechanical contactors and relays for pitting, poor contact, loose or missing parts.
2. Reconnect, retighten or replace if necessary.

4.9 Checking High Voltage Transformer

Tools Required

- phillips screw driver

Warning

Turn off all electrical power to the generator. Also, make sure that power source is locked out and tagged "Equipment Being Serviced" before servicing the generator. You could get seriously injured if you do not.

Warning

Never perform any maintenance, repair, or service work inside the generator without first having performed the discharge procedure as described in "Discharge Procedure" on page 4-3.

1 Check transformer oil level. Oil is at proper level as long as it reaches the horizontal level pin (1 in Figure 4-6) that you can see in the circular window. To replenish transformer oil, unscrew the four screws holding the circular window, fill with Shell Diala Oil AX only. The oil level should not rise above the top of the horizontal level pin.

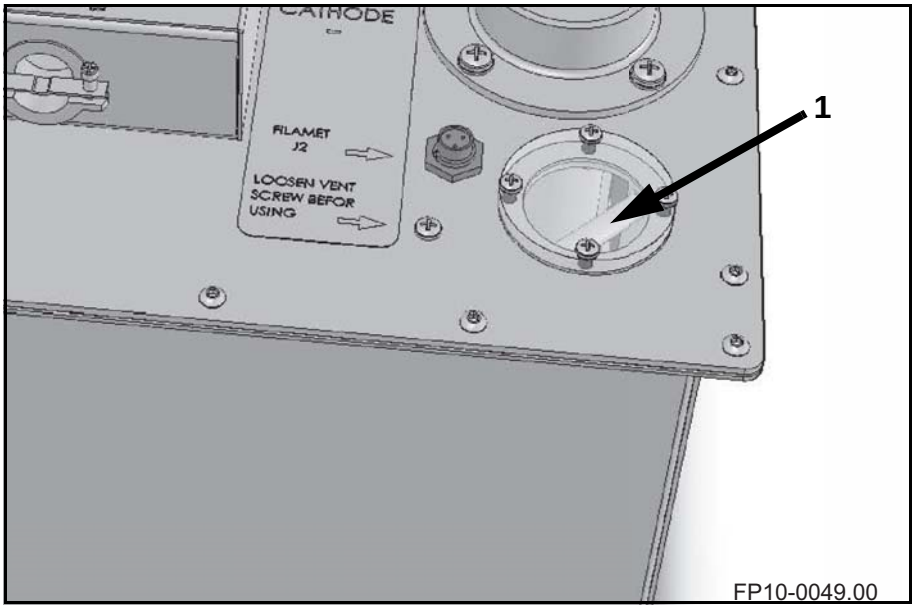

Figure 4-6. Oil level inspection window

2 Check electrical and mechanical connections of the transformer. Clean and tighten as necessary.

4.10 Checking Audible and Visual Exposure Indicators

Tools Required

- phillips screw driver

Warning

Turn off all electrical power to the generator. Also, make sure that power source is locked out and tagged "Equipment Being Serviced" before servicing the generator. You could get seriously injured if you do not.

Proceed as follows to confirm that the audible indicator which indicates an x-ray exposure, and visual indicator, which indicates the production of x-rays, are functioning correctly.

1. Choose any techniques.

Warning

When taking exposures for test and/or verification purposes make sure to follow the specific safety routines and regulations on site.

2. Press and hold down the PREP button.
3. When the green READY light turns on above the PREP button, continue holding down the PREP button while you press the EXPOSE button.
   When the exposure occurs, the yellow X-RAY light above the EXPOSE button will be illuminated and an audible tone will sound for the duration of the exposure.
4. Continue to hold down both buttons until the yellow x ray light goes out and the audible tone ends.

If the controls behave differently from what is mentioned in step 3 and 4, refer to the Troubleshooting section of this manual.

4.11 Checking Fasteners for Tightness

Tools Required

- phillips screw driver

Warning

Turn off all electrical power to the generator. Also, make sure that power source is locked out and tagged "Equipment Being Serviced" before servicing the generator. You could get seriously injured if you do not.

Warning

Never perform any maintenance, repair, or service work inside the generator without first having performed the discharge procedure as described in "Discharge Procedure" on page 4-3.

1. Turn off all power to table.
2. Check each exposed fastener for tightness and tighten accordingly.

Calibration and Adjustments

5

5.1 Introduction

This chapter provides calibration and adjustment procedures for the generator.

Warning

All service and maintenance, including the procedures described within this chapter, are to be performed by qualified service personnel only.

5.2 Calibration Procedure

This procedure is to be followed upon initial installation of the Anthem generator.

5.2.1 Preparations

Test Equipment Required:

- Dual trace storage oscilloscope (required)
- Digital Multimeter/mAs-meter (minimum requirements)
- Dynalyzer™ (optional)

Warning

The following procedures will produce x rays. Operating personnel should take precautions to ensure their personal safety and the safety of others in close proximity. Minimum precautions are as follows:
a. Wear lead aprons.
b. Personnel remaining in the X ray room during exposure should be behind a lead shield.
c. Minimize radiation scatter through doorways, walls and floor.

Warning

Do not touch any part of the mAs meter during exposures because dangerously high voltages can be present if there are improper connections.

1. Make sure that the Main disconnect is OFF.
2. Connect channel 1 and 2 on the oscilloscope as listed below. All test points (TP) are on Main Control board.

Channel	Probe	Ground lead
1	to TP6A (kv)	TP22A
2	to TP47A (mA)	to TP22B

Note!
If you are using a mAs-meter, refer to next page for instructions on how to to connect it.

Connecting mAs-meter

Tools Required:

- medium Phillips screwdriver

a. Unscrew four front panel screws (1 in Figure 5-1) and remove front panel (2).

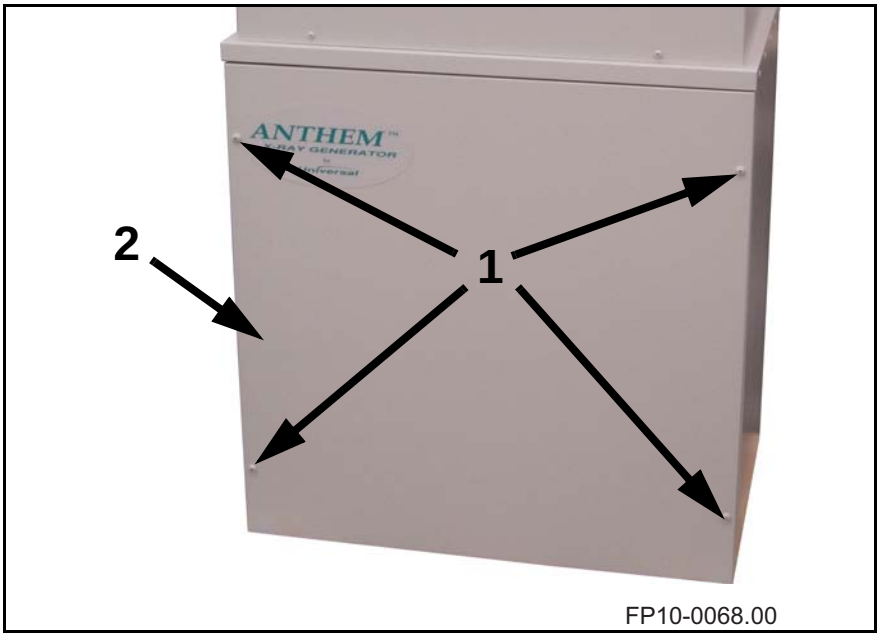

Figure 5-1. Front Panel Removal.

b. Unscrew the two screws (1 in Figure 5-2) that holds the feedback board cover (2) in place on top of the H.V. tank. Remove the cover.

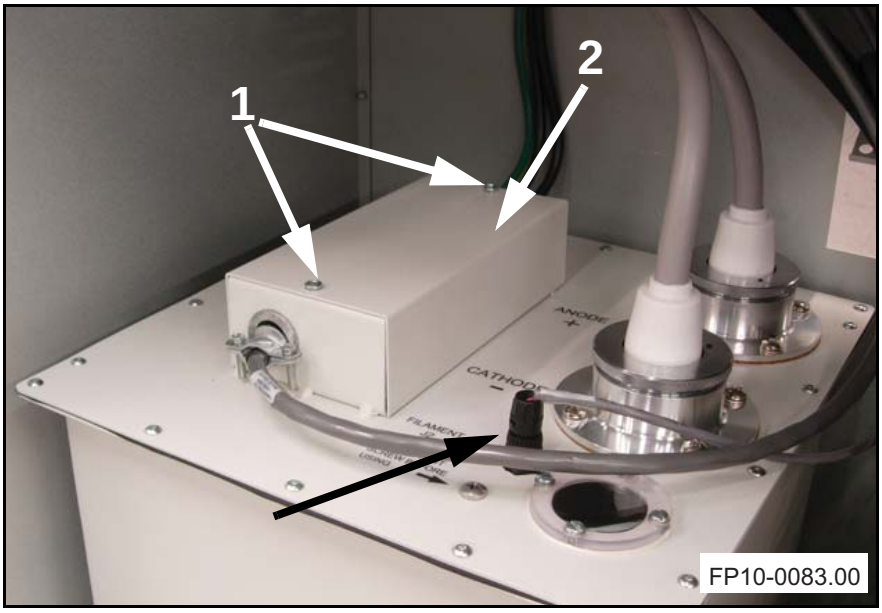

Figure 5-2. Feedback board cover.

c. Loosen the top of the plugs (1 in Figure 5-3).

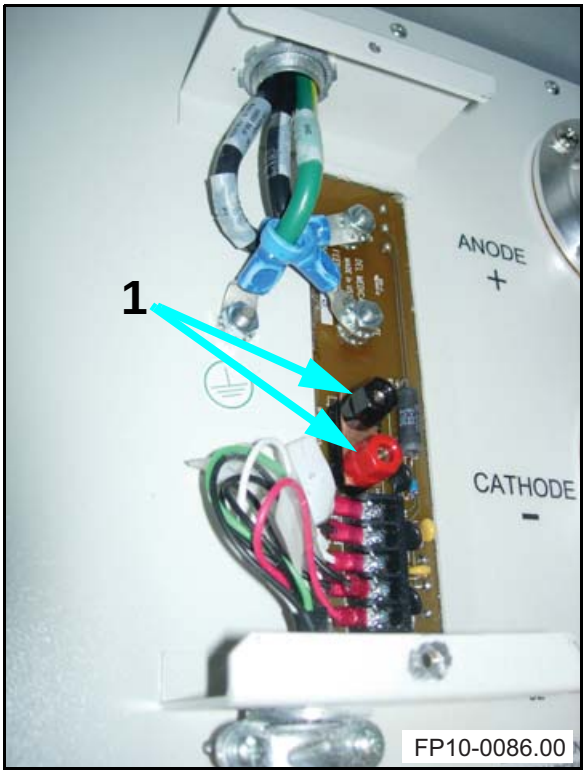

Figure 5-3. Plugs that holds jumper J2 on the feedback board.

d. Remove the jumper J2 (1 in Figure 5-4).

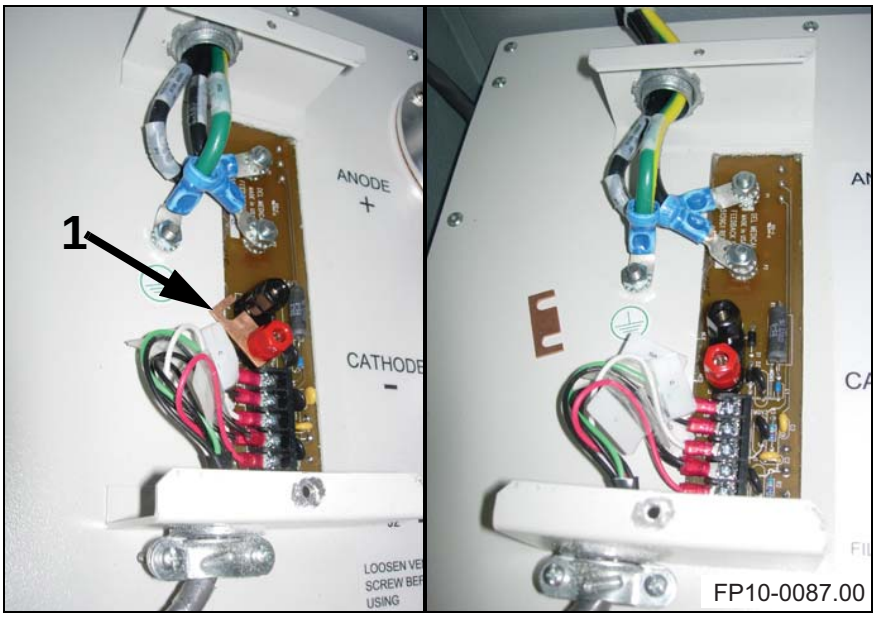

Figure 5-4. Removal of jumper J2.

e. Connect the mAs-meter. Black wire to black plug (1 in Figure 5-5) and red wire to red plug (2).

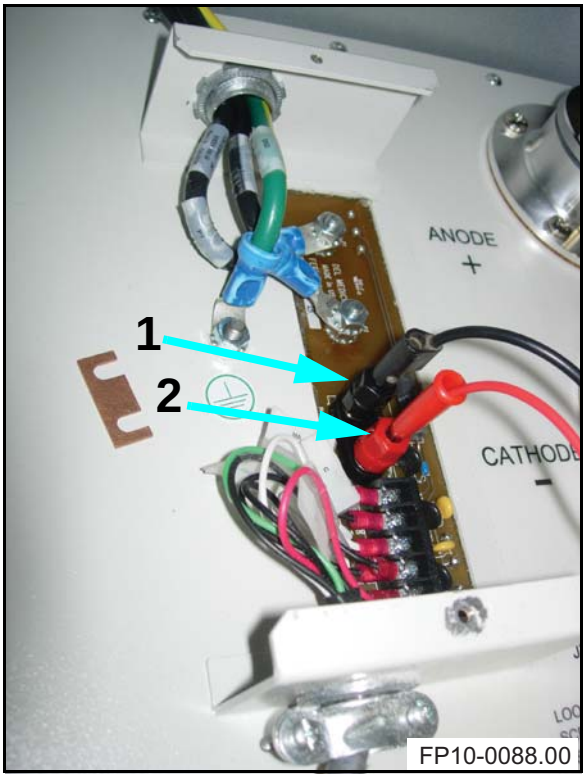

Figure 5-5. mAs-meter connected to the feedback board.

f. Proceed to “Initial Exposure” on page 5-7.

Warning

Make sure to remount the jumper and put the cover back on after calibration is finished!

Oscilloscope settings

3 Set the oscilloscope as follows:

Channel	**#1**
Vertical	2 V/div.
Horizontal	10 ms/div.
Mode	Normal Sweep
Trigger	Channel 1 - Positive

Channel	**#2**
Vertical	1 V/div.
Horizontal	10 ms/div.
Mode	Normal Sweep

Note:
If performing calibration using only scope, value of kV and mA can be read from scope as follow:

From Channel #1:
For kV: 1 V = 20 kV

From Channel #2:
For mA, small spot: 1 V = 20 mA
For mA, Large spot: 1 V = 100 mA

Dynalyzer display settings

4 If you use a Dynalyzer, set the Dynalyzer display as follows:

kVp	A + C
mA/mAs Display	mA
Fil. Amps/Line	Fil. Amps.
Trigger Source	kVp
kV Delay	3.3 msec
Window Delay	Off
Procedure	Normal
Trigger Mode	Percent
Trigger Level	75%
Printer	Off

Initial Exposure

Warning

Lethal voltages are present on the large filter capacitors in this unit. Exercise extreme caution when working near the long copper bus bars attached to the large capacitors in the base of the power module. Never perform any maintenance, repair, or service work inside the generator without first having performed the discharge procedure as described in "Discharge Procedure" on page 4-3. Always verify with a DC voltmeter that the capacitors are discharged before even attempting any service in this area (two mounted to the back wall and one on the bottom of the power module). The three capacitors will remain charged when the power to the unit is turned off.

5 Turn the main line switch "ON".

6 Turn the operators control console ON and set techniques as listed in table below.

Mode	2 Points
kV	40 kV
mAs	1 mAs

7 Make an exposure to verify the functionality of the generator.

5.2.2 Enter Service Mode

The calibration is performed in the Service Mode. Start up the control console in Service Mode as follows:

1 Turn the generator OFF using the ON/OFF switch on the control console.

2 Depress and hold the second button from the lower left corner of the display screen while turning the generator ON. You will be prompted to enter a password. Factory default password is "0000". Enter password and press OK. This will start the generator operator control console in Service Mode.

Caution

In the Calibration menu there is a feature called Wave Form - DO NOT change any settings for this feature unless you are specifically instructed to do so by a technician from the Del Medical Technical Support Team.

5.2.3 Calibration of mA

Enter Service Mode (as described in "Enter Service Mode" on page 5-7) and press Calibrate. The Main Calibration Screen will show.

1. Select mA calibration. mA calibration Step 1 is shown on the screen.

   Step 1: 100 mA, 75 kV, 50 mS

   Functions of the buttons in mA calibration:

   SAVE - will save the result of the calibration step.
   RESET - will restore default value.
   NEXT STEP - will switch between available calibration points.
   EXIT - will return to Main Calibration Screen.

2. Adjust the mA DAC, using the rotational knob, to match the stable mA obtained from the oscilloscope (1 in Figure 5-6) with mA selected (100mA for Step 1) to within 3%.

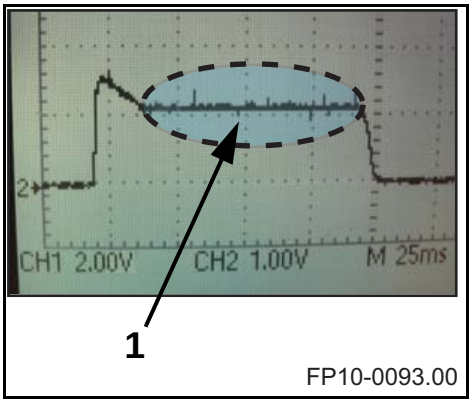

Figure 5-6. Snapshot of oscilloscope screen. Marked section indicates the stable mA obtained.

Calibration point	Voltage at channel 2 (mA)
100 mA, large focal spot	1.0 V
400 mA, large focal spot	4.0 V
600 mA, large focal spot	6.0 V *(only models 40-600 and 50-650)*
25 mA, small focal spot	1.25 V
100 mA, small focal spot	5.0 V

Table 5-1: mA calibration points.

3. Press SAVE when satisfactory results are achieved.

4. Press NEXT STEP to go to mA calibration Step 2 (indicated in the upper left of the screen). Repeat 2 through 3 above for the remaining mA calibration steps. Always press SAVE to save calibration on each step.

5 Press EXIT to return to the Main Calibration Screen.

5.2.4 Calibration of kV

Enter Service Mode (as described in "Enter Service Mode" on page 5-7) and press Calibrate. The Main Calibration Screen will show.

1. Select kV calibration. kV calibration Step 1 is shown on the screen.

   Step 1: 200 mA, 40 kV, 50 mS

   Functions of the buttons in kV calibration:

   SAVE - will save the result of the calibration step.
   RESET - will restore default value.
   NEXT STEP - will switch between available calibration points.
   EXIT - will return to Main Calibration Screen.

2. Adjust the kV DAC, using the rotational knob, to match the kV obtained from the oscilloscope (1 in Figure 5-7) with kV selected (40 kV for Step 1) to within 3%.

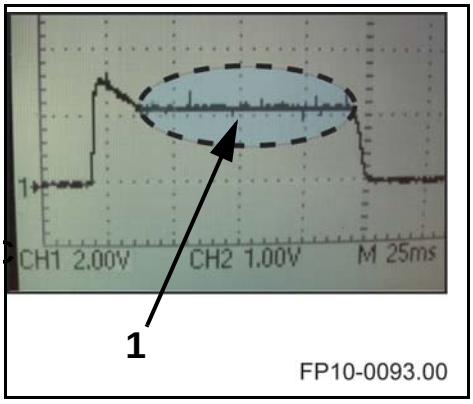

Figure 5-7. Snapshot of oscilloscope screen. Marked section indicates the stable kV obtained.

Calibration point	Voltage at channel 1 (V)
40 kV	2.0 V
75 kV	3.75 V
120 kV	6.0 V

Table 5-2: kV calibration points.

3. Press SAVE when satisfactory results are achieved.
4. Press NEXT STEP to go to kV calibration Step 2 (indicated in the upper left of the screen). Repeat 2 through 3 above for the remaining kV calibration steps. Always press SAVE to save calibration on each step.
5. Press EXIT to return to the Main Calibration Screen.

5.2.5 Pre-Heat

Enter Service Mode (as described in "Enter Service Mode" on page 5-7) and press Calibrate. The Main Calibration Screen will show.

1. Select Preheat calibration.

   Functions of the buttons in Preheat calibration:

   RESET STEP - will restore default value of this step.
   RESET ALL - will restore default values.
   GLOBAL ADJUST - will interpolate values between endpoints so that you do not have to go through them all in this calibration process.
   NEXT KV - will switch between available calibration points.
   NEXT MA - will switch between available calibration points.
   NEXT STEP - will switch between available calibration points.
   SAVE - will save the result of the calibration step.
   EXIT - will return to Main Calibration Screen.
   NEXT PREHEAT - will initially take you to the next PREHEAT calibration step.

2. Select NEXT PREHEAT. The number 1 will show above the text NEWT PREHEAT, indicating this is the first step of the preheat calibration.

   For single phase generators and 3-phase generators up to 500 mA, the preheat calibration always consists of three steps.
   For 3-phase generators above 500 mA the preheat calibration consists of four steps.

3. Take an exposure and observe the mA and KV waveforms.

4. Press FIL DAC and use the rotational knob to adjust the Filament DAC (Pre-Heat) to achieve square mA and KV waveforms. If Fil DAC is too high - turn the knob counterclockwise, if Fil DAC is too low - turn the knob clockwise. See Figure 5-8 for guidance.

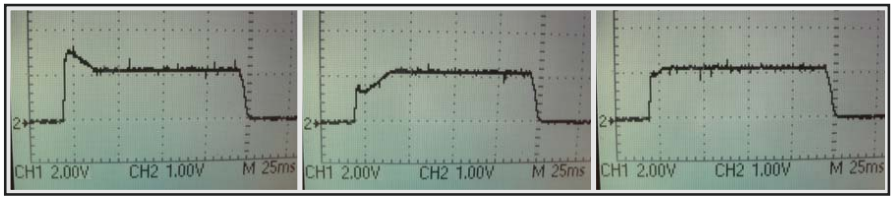

Fil DAC too high **Fil DAC too low** **Fil DAC ok!**

FP10-0067.00

Figure 5-8. Snapshots of oscilloscope screens for high, low, and ok Fil DAC settings.

5. Press SAVE when satisfactory results are achieved.

6. Press NEXT PREHEAT to go to the next step of the preheat calibration.
7. Repeat step 3 through 6.
8. When you are back at step one, press GLOBAL ADJUST, press YES when asked if you are sure. The system will update all values.
9. Press EXIT to return to the Main Calibration Screen.
10. You have now finished the calibration process.
11. Press EXIT and allow generator to complete power up sequence.

5.3 Managing the APR database

Necessary Hardware

- Laptop computer, running Windows 98 or later.
- SD Memory card.
- SD Memory Card Adapter (if PC or laptop does not have a built-in SD Card slot.
- Interface cable, DB9 to DB9, with female connectors at both ends, wired for Pin to Pin operation (DigiKey Part # AE1016-ND or equivalent). See "Interface Cable" on page 5-23 for more specifications.

  Note
  This is NOT a Null Modem cable or an RS232 cable.

Operating the program

If you have not yet installed the Del APR Utility software, refer to "Installing the Del APR Utility Software" on page 2-46 for instructions.

1. Start the Del APR Utility program on the laptop or PC by double clicking the icon on your desktop or by choosing the Del APR Utility software in the Program menu.

When the APR Utility Program is first started, before any data has been downloaded from the Operator's Console, it will display the default APR database. Please note that this database has not yet been optimized for use with the tube which is installed in your generator.

Caution

Do not perform any database optimization until you have ensured that you have selected the x-ray tube that is actually installed with your generator. Improper tube selection may cause permanent damage to the x-ray tube and generator.

Download data from the Control Console using either a DB9 cable or an SD memory card

At this point you can choose to use either a DB9 cable (1 in Figure 5-9) or an SD memory card (2) to transfer (download or upload) and modify the APR database. Steps 2 to 7 describes how you use the DB9 cable and steps

8 to 14 describes how you use an SD memory card.

Figure 5-9. DB9 cable and SD memory card to transfer and modify the APR database.

5.3.1 Downloading Configuration Data

Downloading configuration data from the Operator's Console using a DB9 cable

2 Plug the DB9 cable into the serial port of the laptop. Plug the other end of the cable into the 9 pin Sub-D connector at the rear of the Operator's Console (1 in Figure 5-10).

Figure 5-10. 9 pin Sub-D connector at the rear of the Operator's Console

3 Start the generator in the Dealer Configuration Mode, by pressing and holding the second key from the left at the bottom of the display screen, while turning the power switch at the side of the Operator's Console ON.

4 At the Enter Password prompt, enter the password and press OK.

5 Press Flash Options.

6 Press Laptop Transfer. The Operator's Control screen will now display this message: "WAITING FOR CMD", to indicate that it is ready to receive commands from the laptop computer. Pressing the <EXIT> button will cancel this mode and return to the previous screen.

7 Click on the "Get Data" button in the Data Transfer portion of the APR Utility screen. The status window beneath the button should indicate that the program is establishing contact with the operator's console, waiting for data, downloading data, and checking the CRC checksum for the transfer.

The APR utility is now loaded with the configuration data from your generator, including the installed X-Ray tube, maximum generator power in Kilowatts, Maximum KV, Maximum MA, Maximum mAs, Derating status of the generator, and name of the default APR database in use. If any modifications to the APR database have been performed, they will now be downloaded to the APR utility.

When the download is complete, the APR utility will display this message: “CRC Valid” and the Operator’s Console will display a message relating to the number of transferred bytes.

The download of APR data is now complete.

Downloading configuration data using an SD memory card

8 Insert the SD memory card in the memory card slot at the rear of the operator’s console. The contactors should be facing up and the card is to be pushed all the way in.

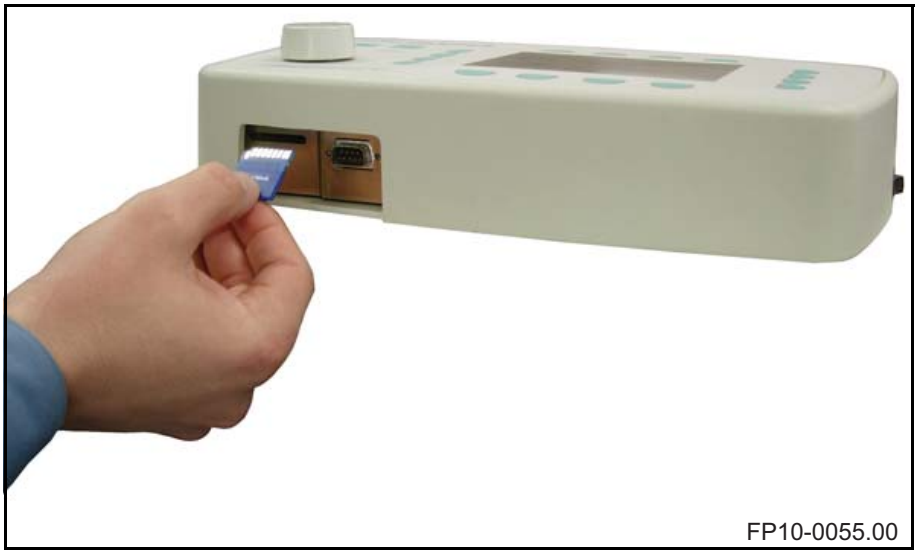

Figure 5-11. Insertion of the SD memory card at the rear of the operator’s console.

9 Start the generator in the Dealer Configuration Mode, by pressing and holding the second key from the left at the bottom of the display screen, while turning the power switch at the side of the Operator’s Console ON.

10 At the Enter Password prompt, enter and press OK.

11 Press Flash Options.

12 Press Export APR. If an APR file already exists on the SD card you will be asked if you want to overwrite it or not. If you do not need the APR data already on the SD card or you have them stored on some other device (SD card, PC, laptop etc.) you can safely choose YES. The Operator’s Control screen will now show that it is exporting the data. It will return to Flash Options Mode when the export is completed.

Remove the SD memory card from the Operator’s Console by pressing it in slightly and then insert it in the SD slot on the PC/laptop

where you have the Del APR Utility software installed. If your PC/ laptop does not have an SD memory card slot you will need an SD memory card adapter like the one in Figure 5-12, to load the data to the software.

Figure 5-12. Multi memory card adapter for USB connection.

13 In the Del APR Utility software menu, click File -> Load to download the file named APRUSER from the SD memory card into the software.

14 The APR utility is now loaded with the configuration data from your generator, including the installed X-Ray tube, maximum generator power in Kilowatts, Maximum KV, Maximum MA, Maximum mAs, Derating status of the generator, and name of the default APR database in use. You can now optimize the APR database, create new anatomical views and modify the APR as described on the following pages. When this is done, save the new data to the SD memory card and then upload them to the Operator's Console.

The download of APR data is now complete.

5.3.2 Adjust the APR Database

There are two ways to adjust the APR database techniques using the Del APR Utility software.

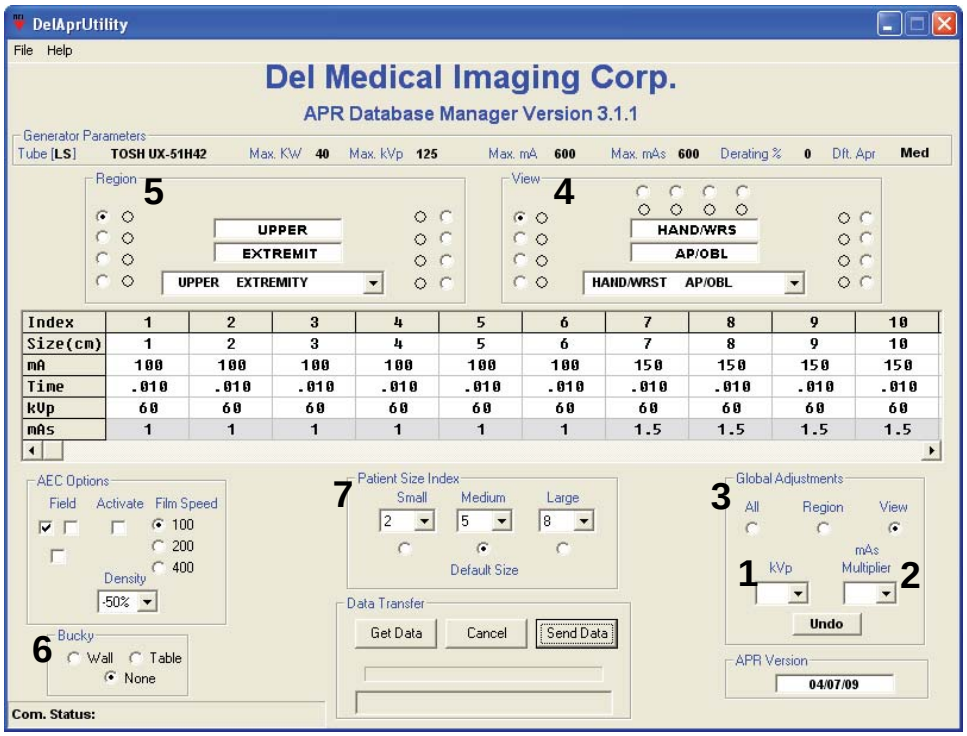

FP10-0075.00

Figure 5-13. Del APR Utility software interface

One way is to adjust kVp (1 in Figure 5-13) and/or mAs (2) techniques on a View-, Region-, or Global level by selecting the level of adjustment in the Global Adjustment field (3) and then increasing or decreasing the kVp and/or mAs by selecting values in the drop-down lists. Choosing the view level means that the changes will only affect the specific view that is selected in the View field (4). Changing the kVp and/or mAs on a Regional level means that all views in the selected Region (5) will be affected by the changes. And finally, changing kVp and/or mAs on a Global level will affect all views in all regions.

The other way is to choose a specific view, by first selecting Region in the Region field (5) and then a specific view in the View field (4). Any parameter for any individual technique or any Patient Thickness (Size (cm)) within any technique may be changed by double-clicking on the exposure parameter you wish to change. Drop-down lists with available values will appear in which you choose the new value.

Additionally, the sections Bucky (6) and Patient Size (7) provide options to set default parameters for Image Receptor and Patient Size Thickness per view.

Did the column header turn red when you changed a parameter?

Any techniques which may have been changed that fall outside the tube protection profile for the selected x-ray tube will cause the header for the column to turn red. This indicates that you have made an choice not allowed. Changing the excessive value of mA, Time, or kV will clear the error condition.

Note
There are no AEC options available on this version of the Anthem.

5.3.3 Creating New Anatomical Views

Any anatomical region or view within a region may be renamed, by wiping the text and typing in the new name for the selection. However, renaming techniques will not automatically change the exposure techniques which may have already been programmed for that location.

In all available anatomic regions, there are up to 12 available views, with 20 available densities per view (Indexed 1 to 20). New views may be created within any anatomic region by selecting one of the available views, indicated with the text SPARE (1 in Figure 5-14), and assigning it an identifiable name.

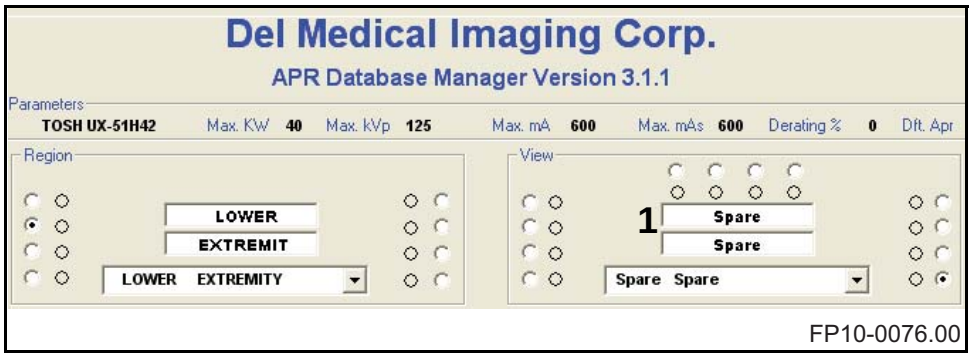

Figure 5-14. New regional views can be created in "SPARE" View fields.

Exposure technique data for any new view must be entered into all of the 20 densities. After entering the kV, mA, and Time for all available selections in the new view, you must optimize the view for your x-ray tube, using the View selection within the Global Adjustments section on APR utility screen, and selecting a mAs multiplier of 1.0.

You must enter the value for patient thickness (in cm) for all thicknesses that will be allowable within this view. You may limit the available patient thickness of any view by entering a value of 0 for all non-required selections.

Any techniques which may have been created that fall outside the tube protection profile for the selected x-ray tube will cause the header for the

column to turn red, indicating that you have made an choice not allowed. Changing the excessive value of mA, Time, or kV will clear the error condition.

5.3.4 Uploading Modified APR Files using a DB9 Cable

After modification, the optimized APR database can be uploaded to the Operator's Control Console in the same manner as the download process, by utilizing the "Send Data" button on the APR utility screen.

Note
The database downloaded from any generator contains the specific signature of that generator's power limit, tube type, and derating status. As a result, the database may only be uploaded to a generator equipped with the same tube, generator power limit, and derating status.

1. Make sure that the Operator's Console is in Laptop Transfer mode, with the "WAITING FOR CMD" message displayed.
2. Click on the "Send Data" button in the Data Transfer portion of the APR utility screen.
3. The APR utility program will establish communication with the console, transfer data, verify the checksum, and wait for the flash memory to be updated. When the process is complete, the APR utility will display the "Flash Updated" message and the operator's console will return to the waiting for command state.
4. You may now exit the utility screens on the operator's console by pressing <Exit> at all prompts. The operator's console will then complete the boot sequence and power up the generator.

The upload of APR data is now complete.

5.3.5 Uploading Modified APR Files using an SD Memory Card

After modification, the optimized APR database can be uploaded to the Operator's Control Console in the same manner as the download process, by utilizing the "Send Data" button on the APR utility screen.

Note
The database downloaded from any generator contains the specific signature of that generator's power limit, tube type, and derating status. As a result, the database may only be uploaded to a generator equipped with the same tube, generator power limit, and derating status.

5. When the APR data has been modified in the Del APR Utility software chose File -> Save in the Menu and save the new modified data to the

SD memory card. Name the file APRUSER. ***DO NOT name the file anything else.***

6 Remove the SD card from the PC/laptop and insert it in the memory card slot at the rear of the Operator's Console. The contactors should be facing up and the card is to be pushed all the way in.

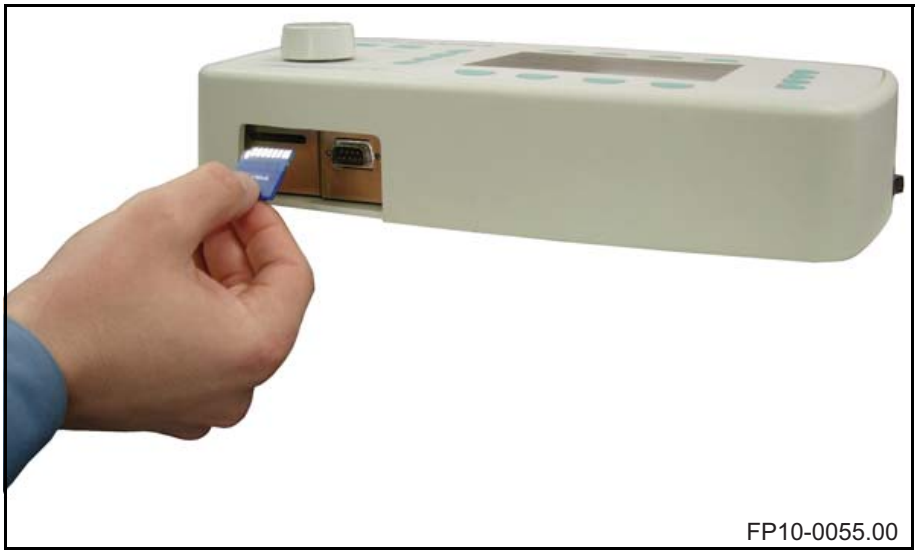

Figure 5-15. Insertion of the SD memory card at the rear of the operator's console.

7 Start the generator in the Dealer Configuration Mode, by pressing and holding the second key from the left at the bottom of the display screen, while turning the power switch at the side of the Operator's Console ON.

8 At the Enter Password prompt, enter the password and press OK.

9 Press Flash Options.

10 Press Import APR. The Operator's Control screen will now show that it is importing the data. It will return to Flash Options Mode when the import is completed.

The upload of APR data is now complete.

5.3.6 Error Messages

Data Mismatch - Aborted: Happens when you send database with the wrong X-Ray tube selected. Reselect X-Ray tube and send it again.

Errors in Database - Aborted: Happens when you send a database with settings that are not allowed. Settings that are not allowed will be indicated on screen when red dots appear next to settings or menu cells are shaded red. Click Cancel to continue.

Error! CRC or time-out: Happens when you send data during the console flash update. This will have no affect on sending the database. Continue as normal.

5.3.7 Interface Cable

Digikey AE1016-ND

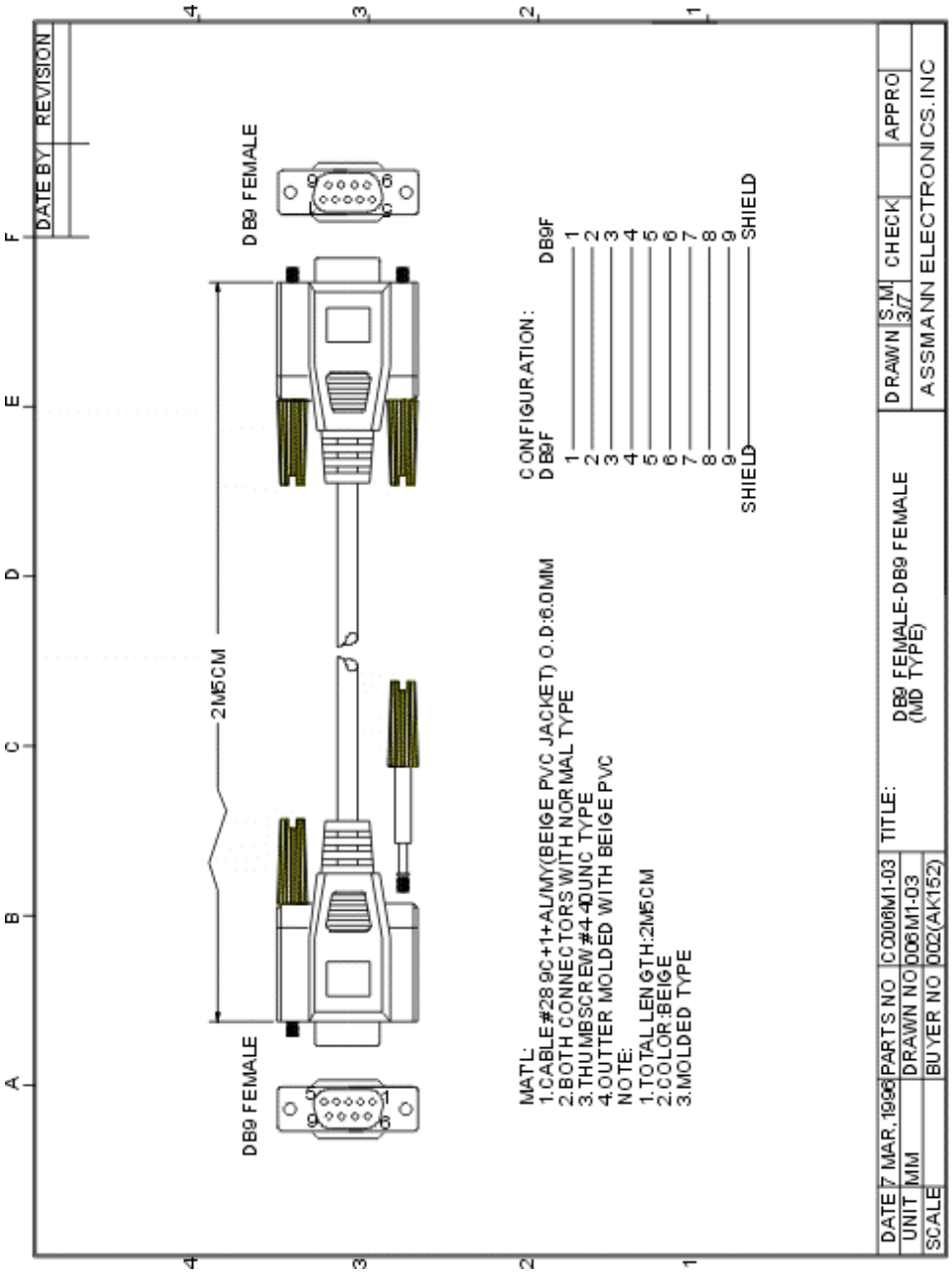

Figure 5-16. Interface cable digikey AE1016-ND.

5.4 AEC Calibration Procedure

This procedure describes the calibration of the Automatic Exposure Control (AEC) option.

The field calibration procedure matches the response of the AEC with the particular film/screen and film processing system in use where the equipment is installed. No ion chamber alone can match the response of all of the possible combinations. The AEC circuitry provides the means to compensate for the non-linear response of the commonly used film-screen combinations. There are six different response curves - screen 100, screen 200, screen 300, screen 400, screen 800 and CR can be calibrated into the AEC by this procedure.

Normally a system will have two three-field detectors - one each in the table and wallstand receptors. Each of these detectors is automatically selected by the generator's control panel when the appropriate image image receptor is selected. Each input has offset adjustments and gain controls.

Warning

The following procedures will produce x rays. Operating personnel should take precautions to ensure their personal safety and the safety of others in close proximity. Minimum precautions are as follows:

a. Wear lead aprons.

b. Personnel remaining in the X ray room during exposure should be behind a lead shield.

c. Minimize radiation scatter through doorways, walls and floor

Test Equipment Required:

- Calibrated Anthem Generator
- Densitometer Capable of Measuring Optical Film Densities of .5 to 2.5 +/- .05
- X-Ray Film and Cassettes
- X-Ray Film Processor
- Miniature Flat-Tip Screwdriver for POT Adjustment
- Attenuating Material - This can be:

  10 Pieces of Acrylic Measuring 1″ (2.54cm) x 8″ (20.3 cm) x 8″ (20.3 cm)
  or
  Flat Bottom (No Reenforcing Ridges) Plastic Buckets with 12″ (30.5 cm of Water.

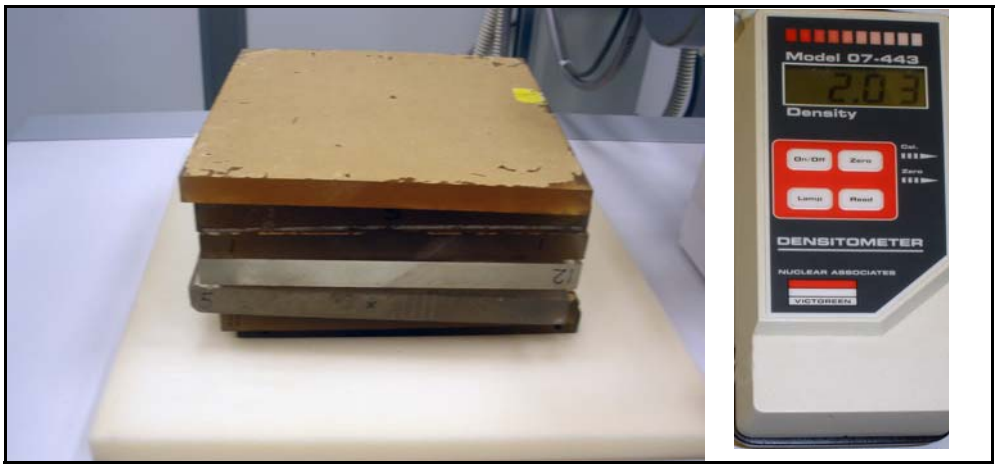

Figure 5-17. Typical Acrylic and Densitometer

Warning

Make sure that main power circuit breaker for generator is off and console switch is turn off before doing the following steps. You may get severely shocked if you do not.

1 Connect table ION chamber to J19 on generator.

2 Connect wallstand ION chamber to J21 on generator.

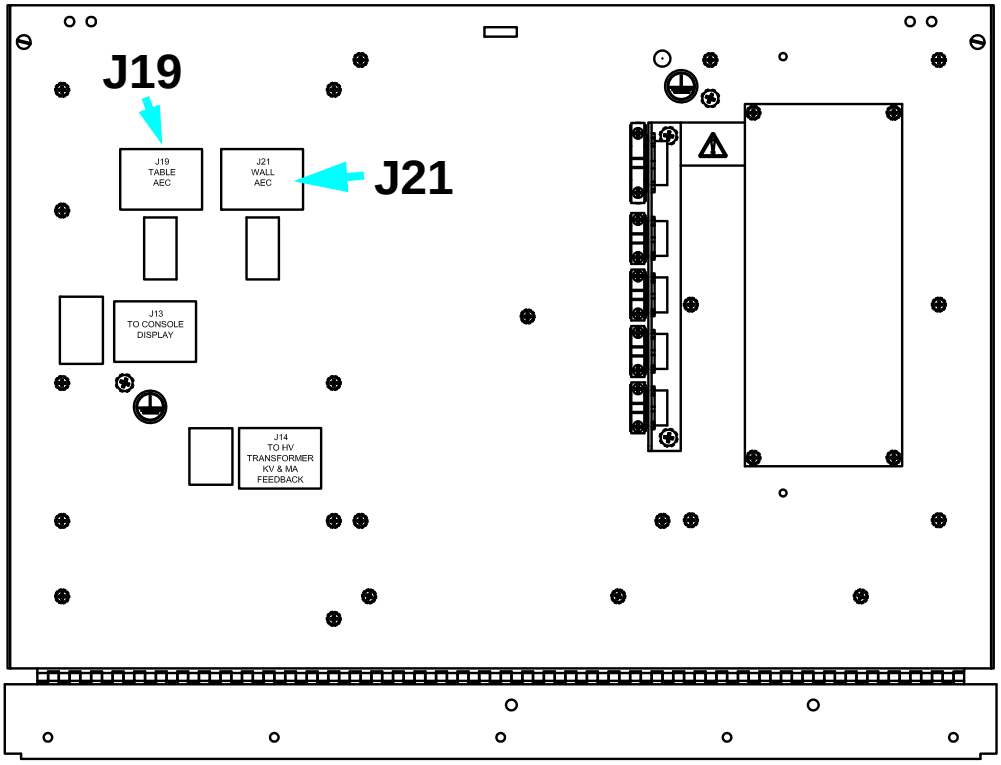

Figure 5-18. ION Chamber Connections

Note: If the bucky is not installed in either the table or the wall stand, the RDY and RDY COM terminals shown below must be jumpered.

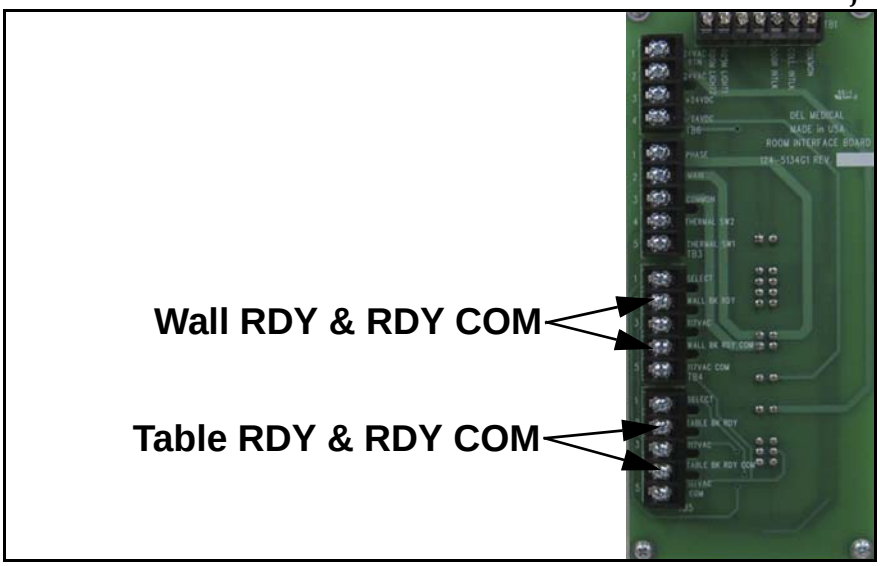

Figure 5-19. Table and Wall Jumpers

3 Verify jumper is connected between position 2 and 3 on JP300 on main control board

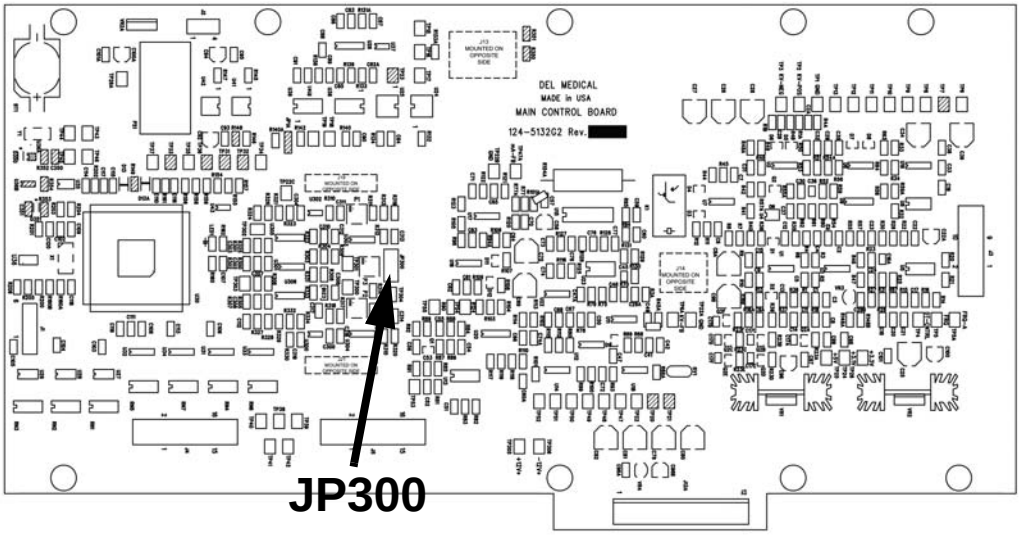

Figure 5-20. J300 Jumper Connections

Note: The JP300 jumper is used during factory pretesting. Normal operating position for the jumper is 2 and 3. DO NOT ATTEMPT TO CHANGE THIS JUMPER POSITION UNLESS DIRECTED TO DO SO.

Warning

Use extreme caution when working around or adjusting generator when it is turned on and covers are off. Do not come in contact with any circuits or components. Circuits may carry lethal voltages which can electrocute or severely burn you.

4 Enter service mode by pressing and holding button (1 in Figure 5-21) while switching the power switch (2) ON.

Figure 5-21. Entering Service Mode

5 Enter password. The password is entered by pressing each password button (1 in Figure 5-22) while turning dial (2) until desired digit is shown in display. Then press OK button (3).

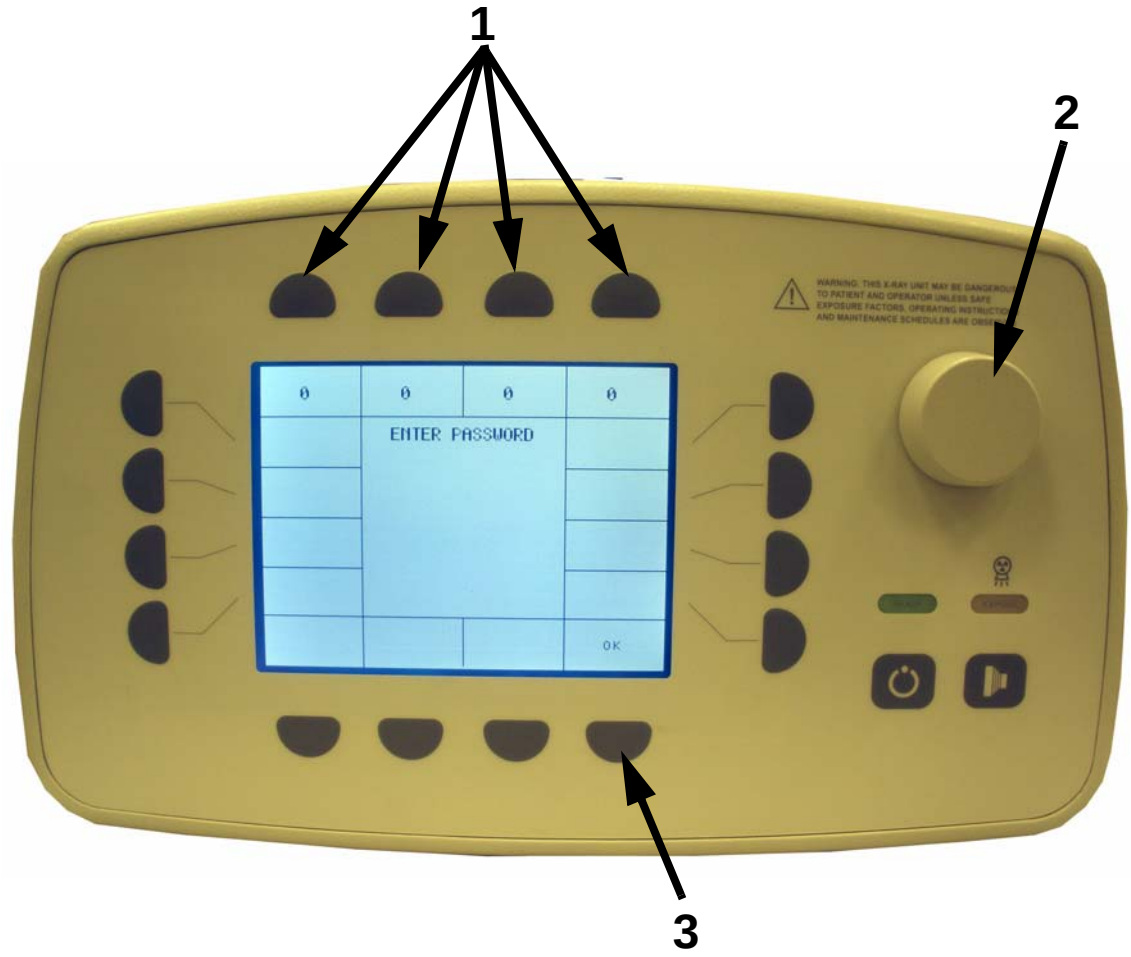

Figure 5-22. Entering Password

Enable AEC and AEC defaults. This tells the generator where the ion chambers are connected and also sets the default such as the chamber type and optical density OD. The default film speed is not selectable during this time since the AEC is not calibrated under a specific film speed.

Change AEC INSTALLED to YES. This will automatically take you to the next page where you have to select YES to BUCKY AEC TABLE, and/or BUCKY AEC WALL. Set the AEC CHAMBER TYPE, either ION or SOLID STATE.

Set the desired default OD. Typically 1.2.

6 Press CALIBRATE button (1 in Figure 5-23).

Figure 5-23. Calibrate Button

7 Press AEC button (1 in Figure 5-24).

Figure 5-24. AEC Button

8 Press mode button (1 in Figure 5-25) to select the WALL or TABLE chamber that you want calibrate.

Note: All calibration for the wall chamber will be performed at 40″ SID.

9 Press optical density button (2) until desired optical density appears.

10 Press chamber type button (3) to select desired chamber type (ion or solid state).

11 Press film screen button (4) until desired film screen appears.

Note: The film screen speed display is not only a reminder of the film being used but also stores the AEC calibration data. For sites using more than one film speed, this selection will allow you to calibrate multiple film speeds.

12 Press next step button (5).

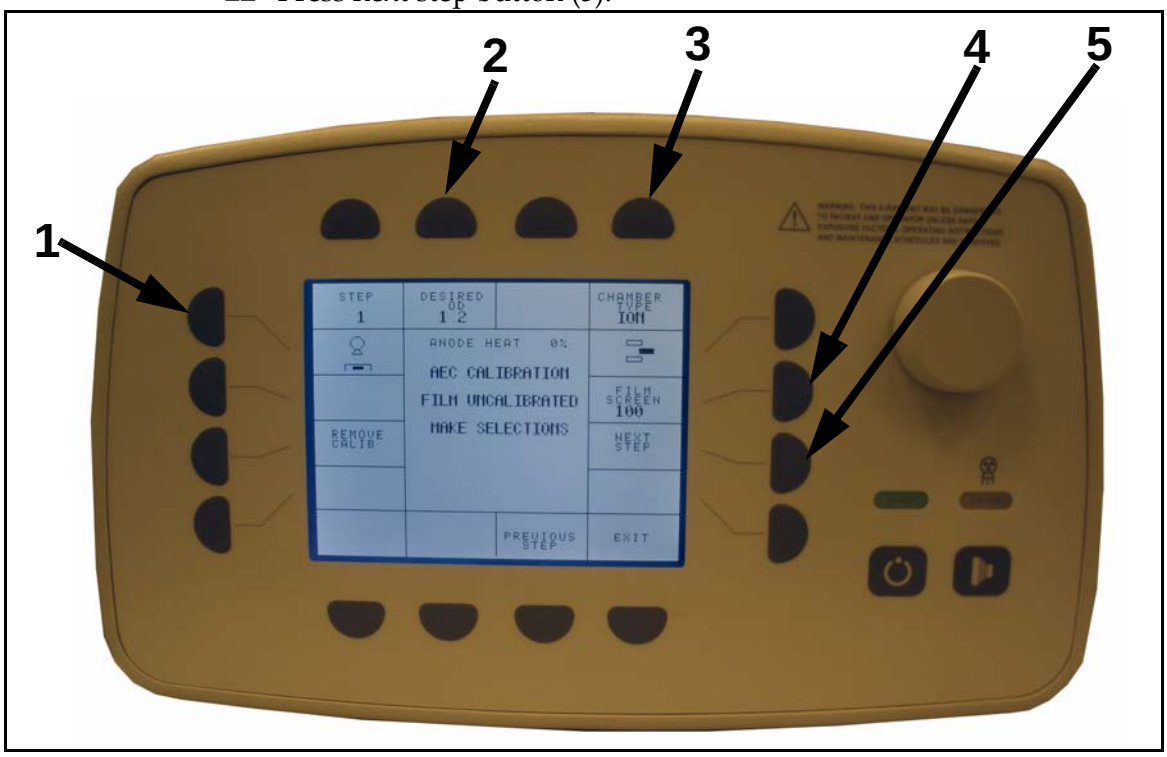

Figure 5-25. Step 1 Screen

13 Place 6″ of acrylic (or water) over the center cell of the chamber you are calibrating. Position the focal spot at 40″ SID and collimate the beam to cover the entire cell.
The 6″ of acrylic (or water) will be used for setting master gain and also cell balancing.

14 Make an exposure and develop film.

15 Check optical density of film with densitometer.

16 Adjusting the ION chamber's master gain:

Table Master Gain
Adjust the TABLE master gain pot **P1** on the main control board to achieve the desired density. Clockwise increases gain (decreases OD thus decreasing elapsed mAs). Once OD is achieved, do not readjust P1 at any time.
The generator will automatically record the *elapsed* mAs (1 in Figure 5-26.) during this step. This will become your *desired* mAs during cell balancing.

Wall Master Gain
Adjust the WALL master gain pot **P2** on the main control board to achieve the desired density. Clockwise increases gain (decreases OD thus decreasing elapsed mAs). Once OD is achieved, do not readjust P1 at any time.
The generator will automatically record the *elapsed* mAs (1 in Figure 5-26.) during this step. This will become your *desired* mAs during cell balancing.

17 Press next step button (2).

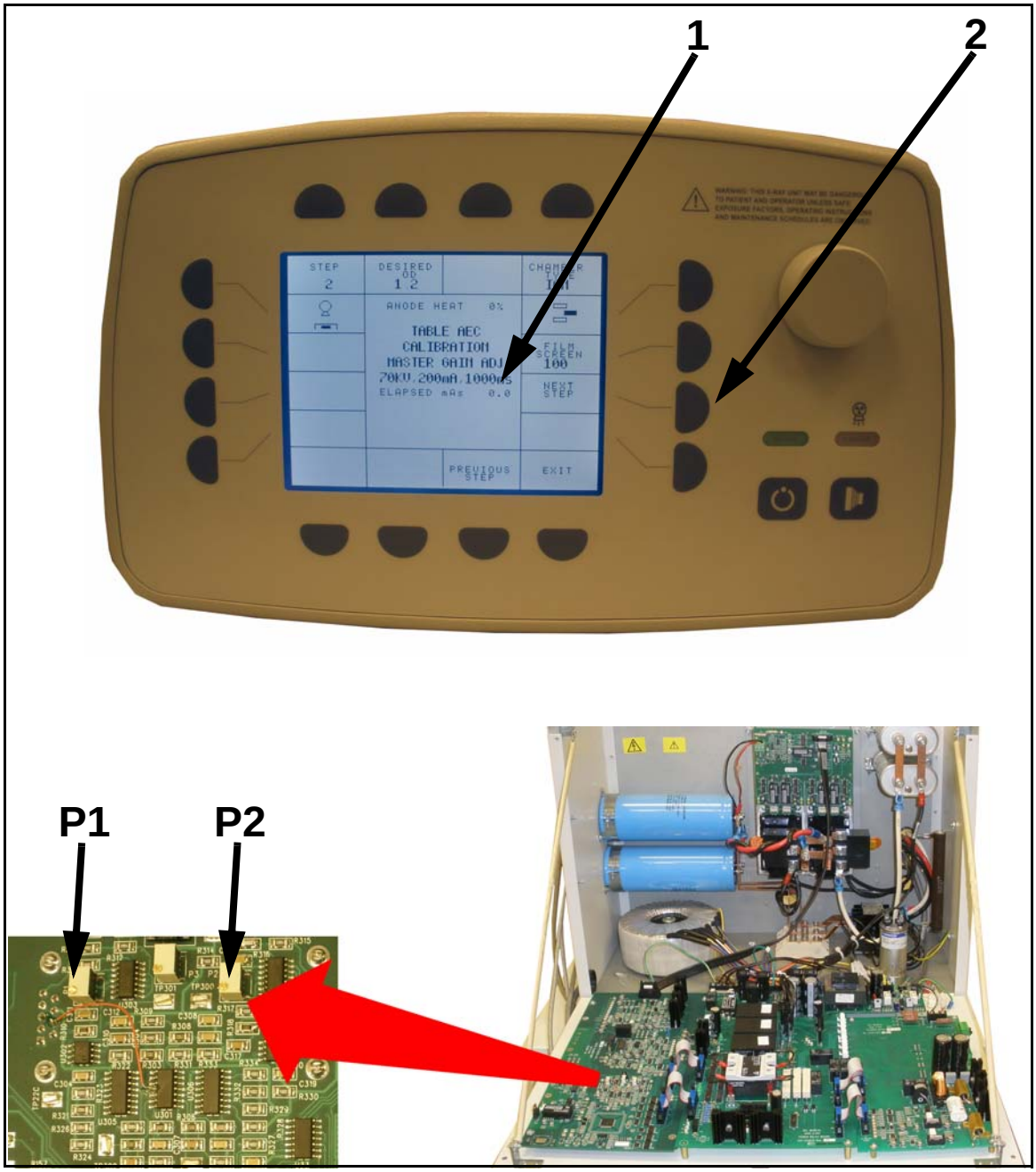

Figure 5-26. Step 2 Screen and Master Gain Adjustment

18 Step 3 screen will appear as shown below. The right field (1 in Figure 5-27) will be highlighted.

19 Insert empty (no film) cassette into table.

Note: Be sure to collimate the beam - cover the upper two cells or al three cells.

20 Take exposure and observe elapsed mAs (2).

21 If elapsed mAs is within 10% of the desired mAs, press next step button (3) and proceed with the balancing of the left cell. If not, adjust the individual gain adjustment on the chamber pre-amp for that cell (4). Adjust until the elapsed mAs within 10% of desired mAs. Then press next step button (3) to proceed.

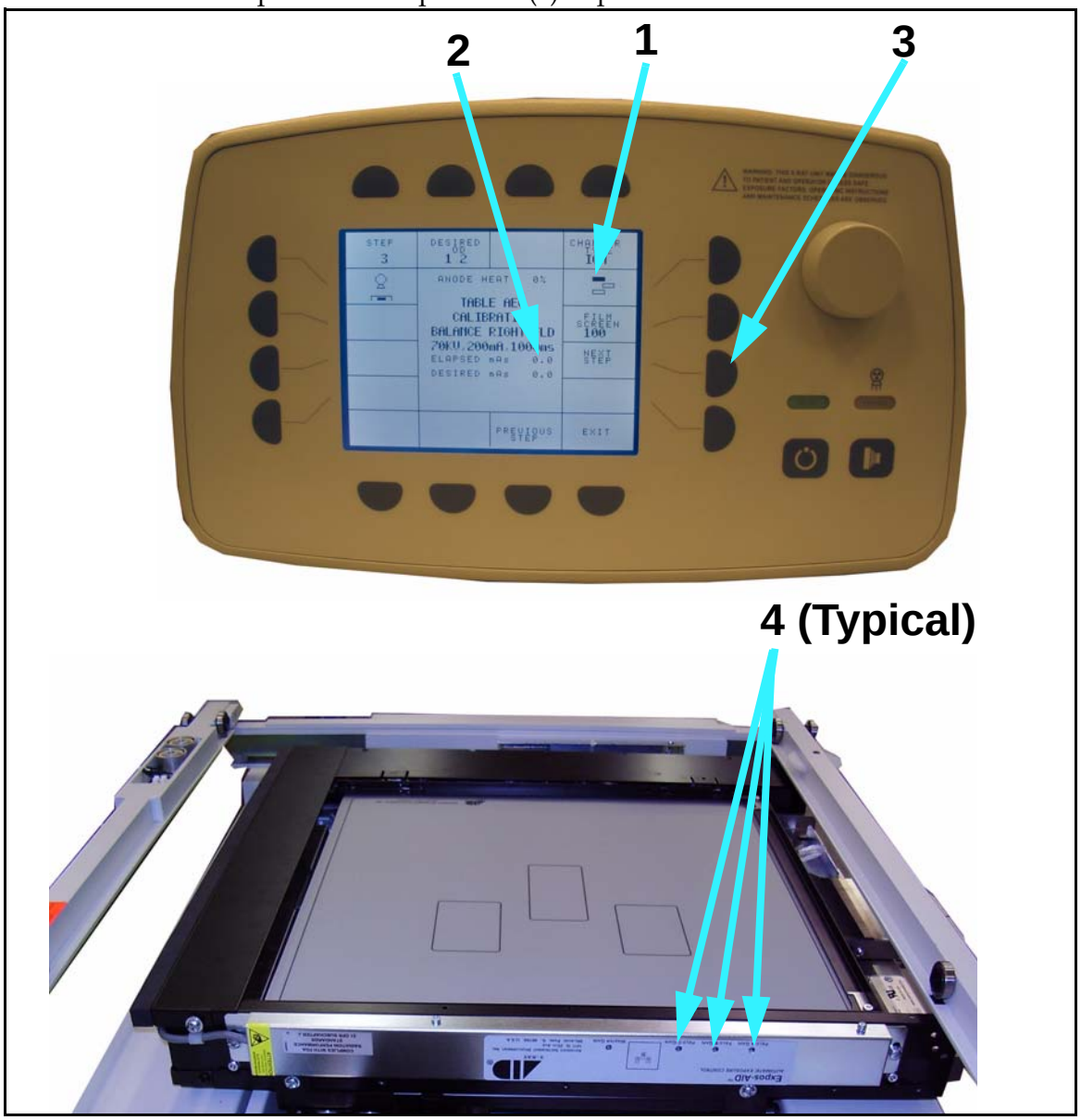

Figure 5-27. Step 3 Screen and Ion Chamber POTs

22 Step 4 screen with appear as shown below. The left field (1 in Figure 5-27) will be highlighted. Repeat steps 19-21 to balance the left field.

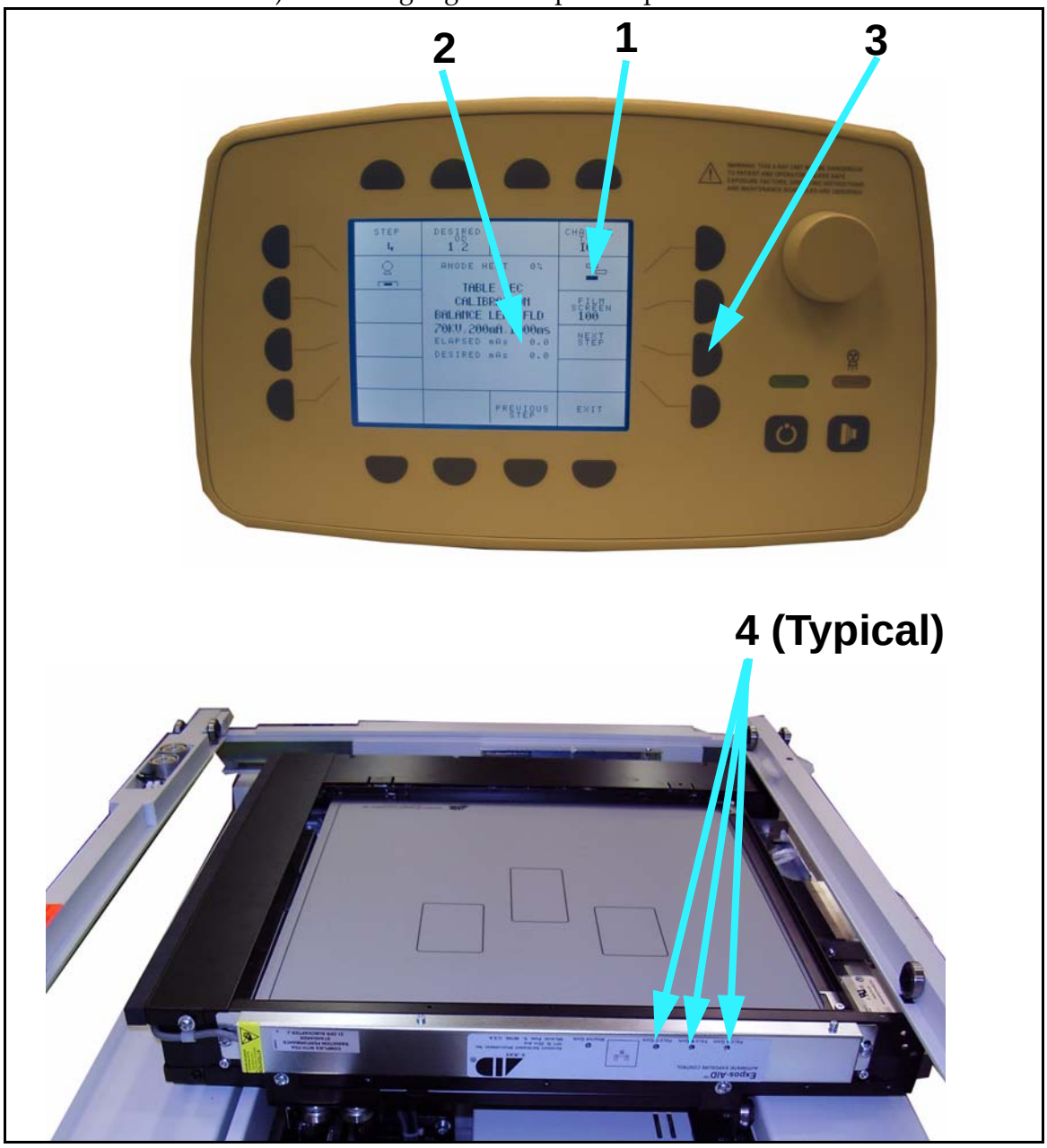

Figure 5-28. Step 4 Screen and Ion Chamber POTs

23 Step 5 will appear as shown below. Place 6” of acrylic or water in bucket over center cell. Be sure to collimate beam over entire cell

24 Place film in cassette.

25 Take exposure and develop film.

26 Check optical density of film with densitometer.

27 If optical density is within 5% of DESIRED OD (1 in Figure 5-29), press next step button (2) and skip to step 29 of this procedure.

28 If optical density *is not* within 5% of desired OD, the AEC DAC value (3) will have to be adjusted.

Highlight the AEC DAC by pressing button (4). Turn the console knob (5) to increase or decrease the DAC value. Clockwise will increase the DAC value thus increasing OD and elapsed mAs. Once your optical density is within 5% of desired OD, save your changes by pressing the save button (6). Then go to the next step by pressing next step button (2).

Note: You can calculate the new AEC DAC by using this simple formula:

Current DAC X (DESIRED OD/Measured OD) = New AEC DAC

Example: 101 X (1.2/1.4)

101 X (.857)

. 101 X .857=86 This is the new DAC

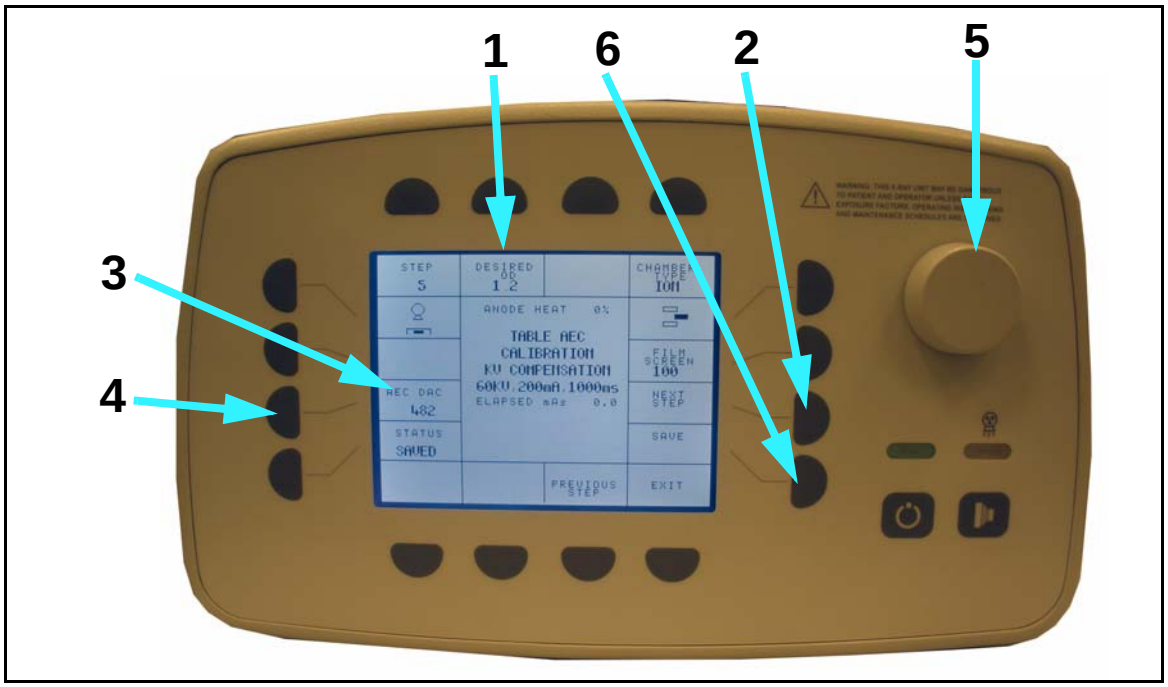

Figure 5-29. Step 5 Screen

29 Step 6 will appear as shown below. Place 8″ of acrylic or water in bucket over center cell. Be sure to collimate beam over entire cell

30 Place film in cassette.

31 Take exposure and develop film.

32 Check optical density of film with densitometer.

33 If optical density is within 5% of DESIRED OD (1 in Figure 5-30), press next step button (2) and skip to step 35 of this procedure.

34 If optical density *is not* within 5% of desired OD, the AEC DAC value (3) will have to be adjusted.

Highlight the AEC DAC by pressing button (4). Turn the console knob (5) to increase or decrease the DAC value. Clockwise will increase the DAC value thus increasing OD and elapsed mAs. Once your optical density is within 5% of desired OD, save your changes by pressing the save button (6). Then go to the next step by pressing next step button (2).
Note: You can calculate the new AEC DAC by using this simple formula:

Current DAC X (DESIRED OD/Measured OD) = New AEC DAC
Example: 101 X (1.2/1.4)
101 X (.857)
. **101 X .857=86 This is the new DAC**

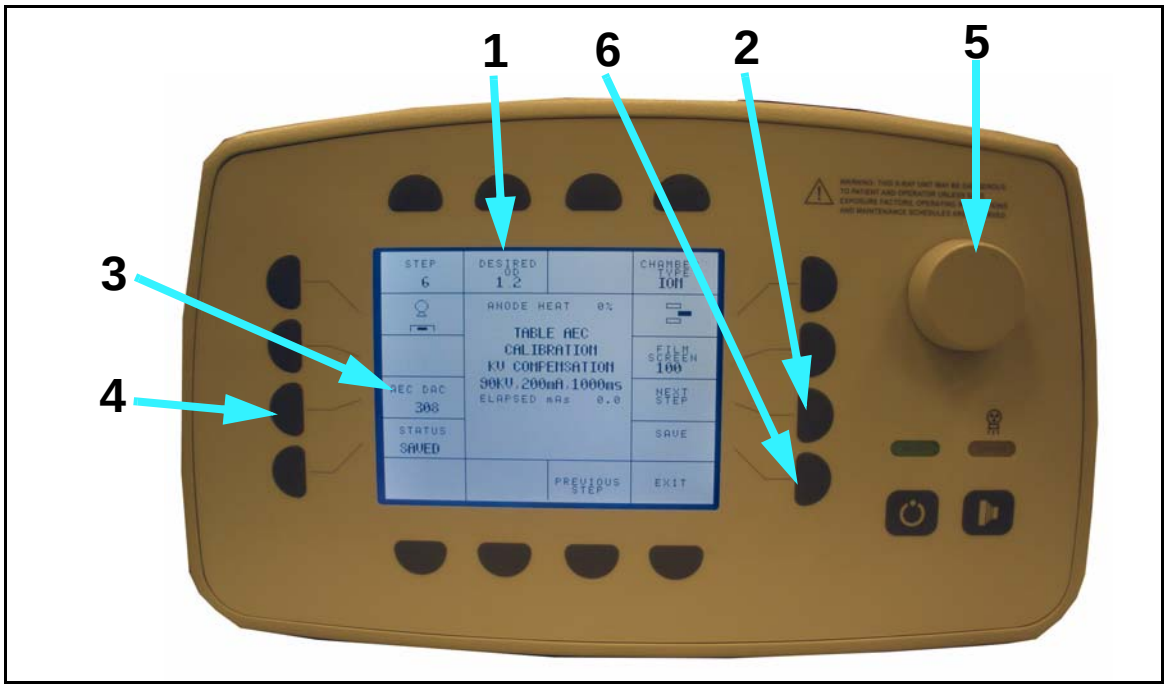

Figure 5-30. Step 6 Screen

35 Step 7 will appear as shown below. Place 10” of acrylic or water in bucket over center cell. Be sure to collimate beam over entire cell

36 Place film in cassette.

37 Take exposure and develop film.

38 Check optical density of film with densitometer.

39 If optical density is within 5% of DESIRED OD (1 in Figure 5-31), AEC calibration is complete for this receptor.

40 If optical density *is not* within 5% of desired OD, the AEC DAC value (3) will have to be adjusted.

Highlight the AEC DAC by pressing button (4). Turn the console knob (5) to increase or decrease the DAC value. Clockwise will increase the DAC value thus increasing OD and elapsed mAs. Once your optical density is within 5% of desired OD, save your changes by pressing the save button (6). AEC calibration is complete.
Note: You can calculate the new AEC DAC by using this simple formula:

Current DAC X (DESIRED OD/Measured OD) = New AEC DAC

Example: **101 X (1.2/1.4)**

101 X (.857)

101 X .857=86 This is the new DAC.

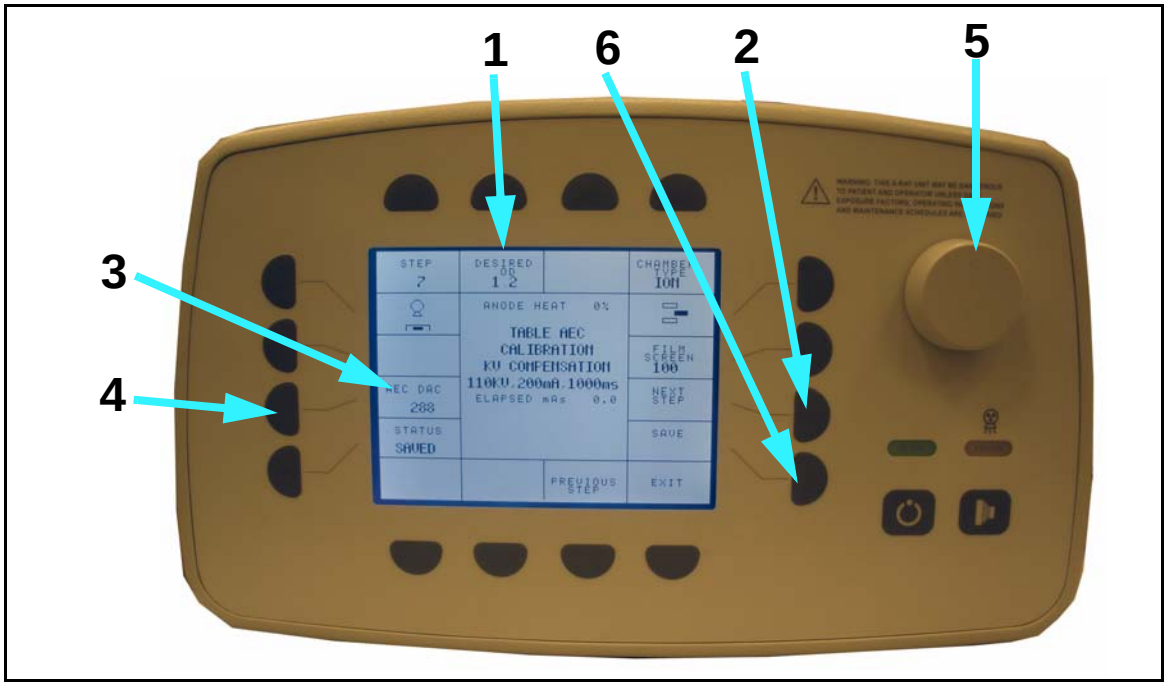

Figure 5-31. Step 7 Screen

5.5 Verification of the AEC safety

5.5.1 Verification of the Generator Backup mAs and Reset Function:

In 3 point mode, select 70KV, 200mA, and 100ms. Cover the fields with 15cm (6′′) phantom. Take an exposure and note the elapsed mAs. Change the back-up time until the mAs (display on the console) is 5% less then the elapsed mAs. Take an exposure. The error “Backup mAs term” should display on the console.

Press the reset button, change the backup time until the mAs (display on the console is 5% more than the elapsed mAs. Take an exposure, no error should occur.

5.5.2 Verification of the AEC Safety Stop Function (No Ramp, Bad ION Chamber

In 2 points mode, select 70KV, 20mAs. Disconnect the ION chamber cable from J21. Take an exposure; the error “ION Chamber Flt” should display on the console in less than 40ms.

Component Replacement

6

6.1 Introduction

This chapter provides instructions for replacing most of the major assemblies on the generator.

Warning

All service and maintenance including the procedures described within this chapter, are to be performed by qualified service personnel only.

6.2 Discharge Procedure

When ever you are performing maintenance, repair, or service on the generator that requires you to open the upper or lower cabinet you must always make sure the unit is discharged. Discharge the generator according to Section 4.1.1 on page 4-3.

6.3 Removing Front Panel

This is a common procedure that is referenced to in replacement procedures that follow in this chapter.

Tools Required:

- medium Phillips screwdriver

Warning

Turn off all electrical power to the generator. Also, make sure that power source is locked out and tagged "Equipment Being Serviced" before servicing the generator. You could get seriously injured if you do not.

Warning

Never perform any maintenance, repair, or service work inside the generator without first having performed the discharge procedure as described in "Discharge Procedure" on page 6-2.

1. Turn off all power to the generator.
2. Unscrew four front panel screws (1 in Figure 6-1) and remove front panel (2).

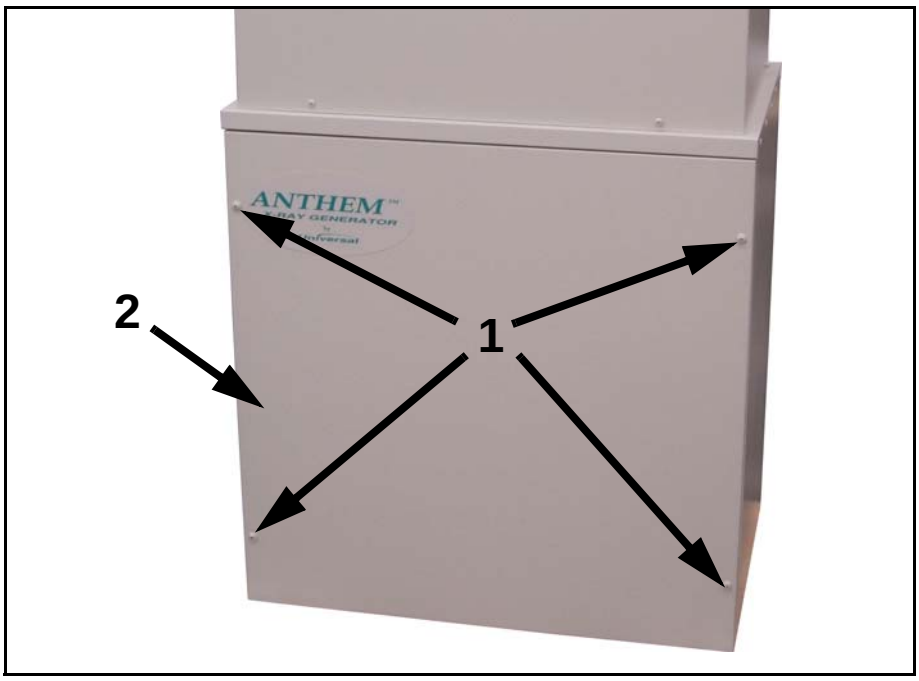

Figure 6-1. Front Panel Removal

6.4 Removing Upper Cabinet Cover

This is a common procedure that is referenced to in replacement procedures that follow in this chapter.

Tools Required:

- medium Phillips screwdriver

Warning

Turn off all electrical power to the generator. Also, make sure that power source is locked out and tagged "Equipment Being Serviced" before servicing the generator. You could get seriously injured if you do not.

Warning

Never perform any maintenance, repair, or service work inside the generator without first having performed the discharge procedure as described in "Discharge Procedure" on page 6-2.

1. Turn off all power to the generator.
2. Unscrew eight upper cabinet cover screws (two in front and three on each side) and lift off cover (1 in Figure 6-2).

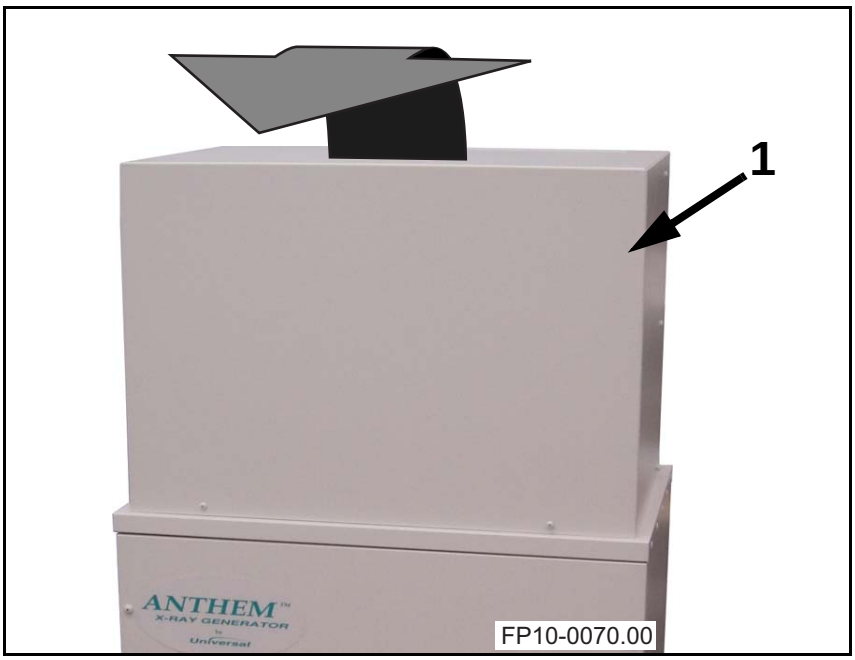

Figure 6-2. Removal of Upper Cabinet Cover

3 Unscrew the two thumb screws (1 in Figure 6-3) to open the power module door (2).

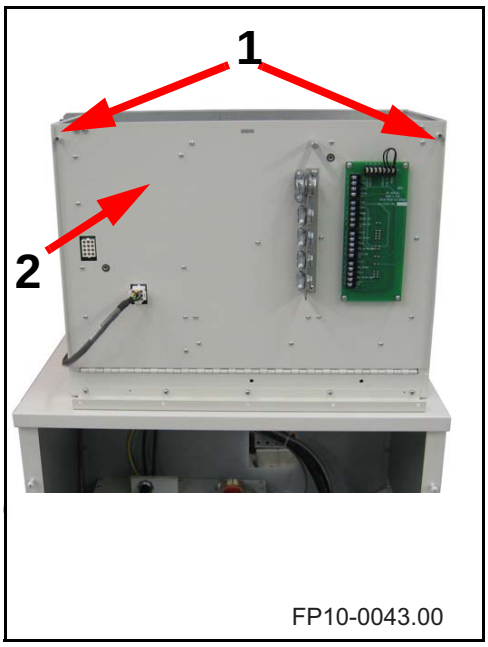

Figure 6-3. The power module door is secured in place by two thumb screws.

6.5 Replacing Fuses on Power Relay Board

The power relay board is located inside the upper cabinet cover.

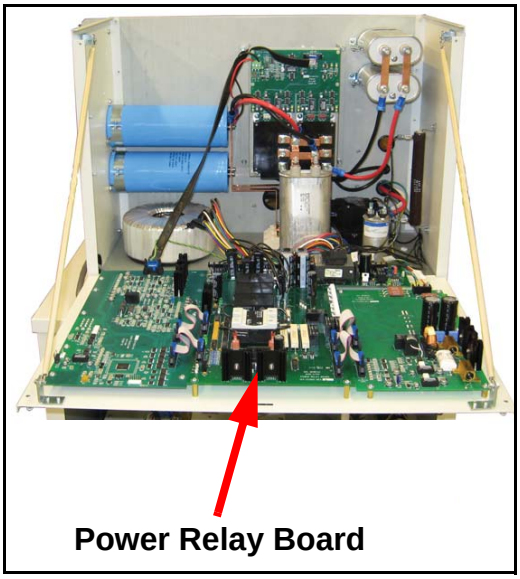

Figure 6-4. Power Relay Board location

Tools Required:

- medium Phillips screwdriver
- small flat-tip screwdriver

Warning

Turn off all electrical power to the generator. Also, make sure that power source is locked out and tagged "Equipment Being Serviced" before servicing the generator. You could get seriously injured if you do not.

Warning

Never perform any maintenance, repair, or service work inside the generator without first having performed the discharge procedure as described in "Discharge Procedure" on page 6-2.

Caution

Always use an anti-static wrist strap when working on electrostatic sensitive devices.

1 Turn off all power to the generator.

2 Remove upper cabinet cover according to Section “Removing Upper Cabinet Cover” on page 6-4.

Caution

Replace fuses only with same type and rating of fuse or machine may get damaged.

3 Gently pry each fuse out of its holder.

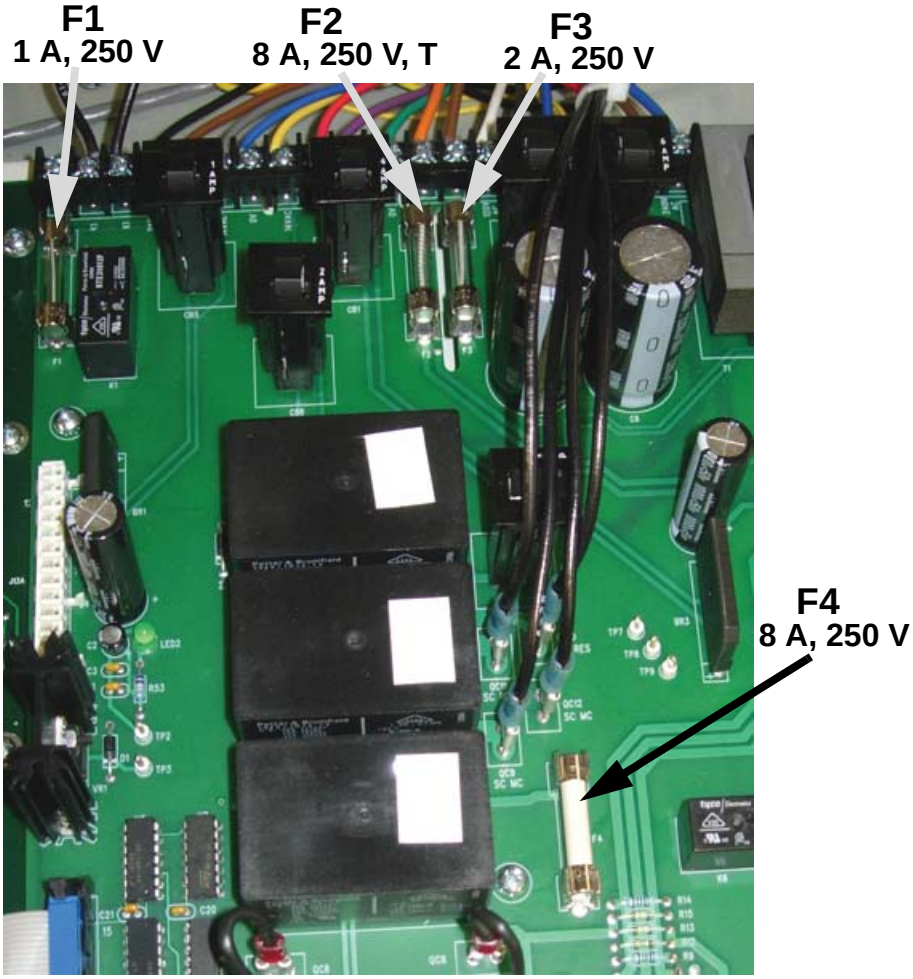

FP10-0069.00

Figure 6-5. Fuse Location on Power Relay Board

4 Reverse steps to reassemble.

Caution

Make sure there are no tools or loose hardware left inside the generator before remounting the cover.

5 Remount the upper cabinet cover.

6.6 Replacing Transformers

Single-phase generators have two transformers, one isolation transformer and one line match transformer. Both are located in the upper cabinet.

3-phase generators have one transformer in the upper cabinet (isolation transformer) and three transformers in the lower cabinet (line match transformers).

6.6.1 Single-phase Generators

The line match transformer and the isolation transformer are located in the power module inside the upper cabinet.

Tools Required:

- set of open wrenches
- medium flat-tip screwdriver
- medium Phillips screwdriver
- needle-nose pliers

Warning

Turn off all electrical power to the generator. Also, make sure that power source is locked out and tagged "Equipment Being Serviced" before servicing the generator. You could get seriously injured if you do not.

Warning

Never perform any maintenance, repair, or service work inside the generator without first having performed the discharge procedure as described in "Discharge Procedure" on page 6-2.

1. Turn off all power to the generator.
2. Remove upper cabinet cover according to "Removing Upper Cabinet Cover" on page 6-4.

Replace Line Match Transformer (Single-phase Generator)

3 Disconnect the four power wires (1 in Figure 6-6) from the line match transformer (1 in Figure 6-7) at TB1 at the back of the power module (2 in Figure 6-6). Pull the cables out from the front as indicated by 2 in Figure 6-7.

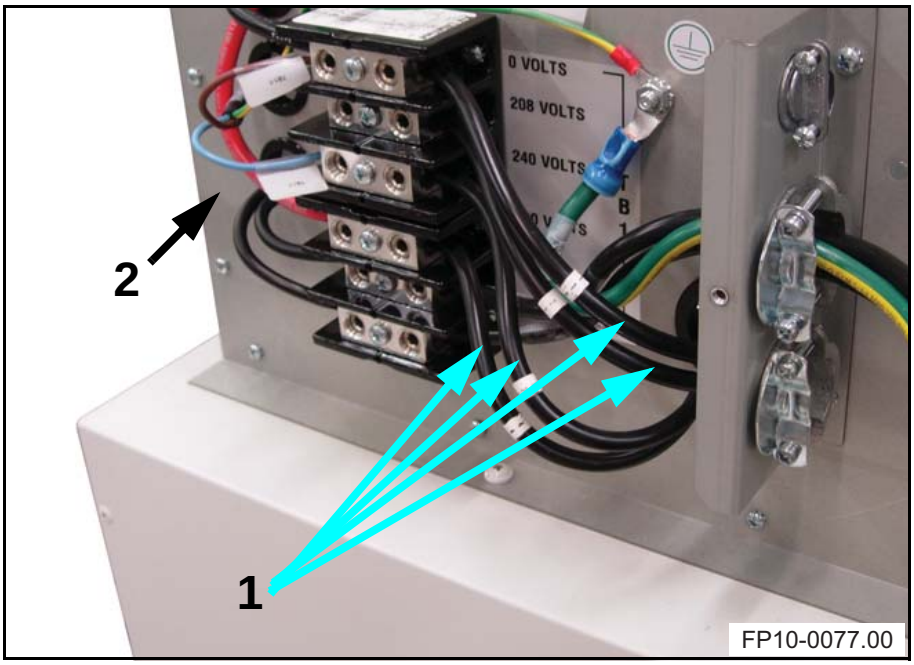

Figure 6-6. Power wires from the line match transformer (single-phase generator).

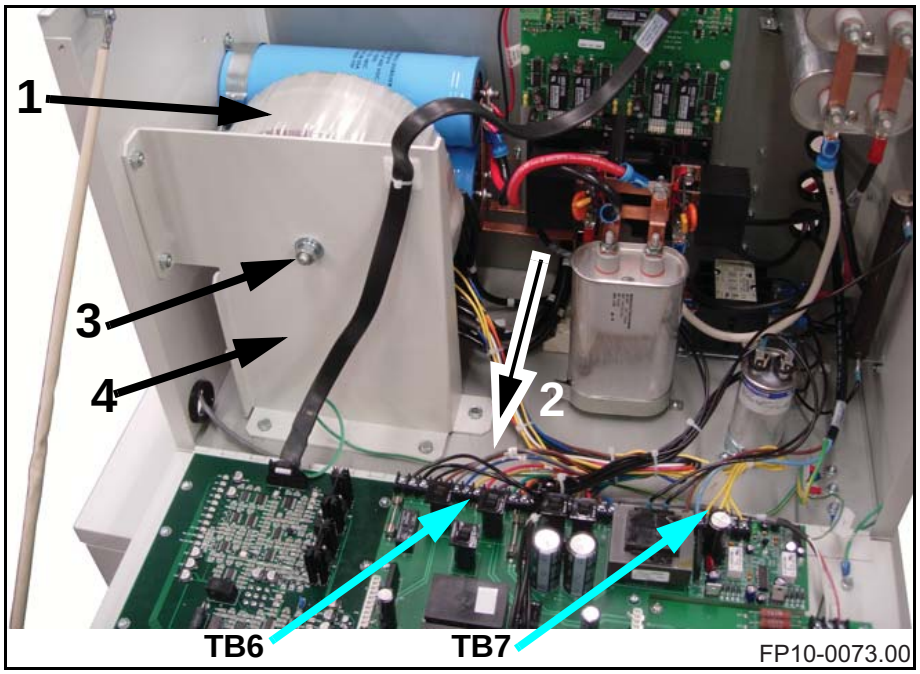

Figure 6-7. Location of line match transformer (single-phase generator).

4 Unscrew the nut (3 in Figure 6-7) from the bolt holding the line match transformer in place and remove the line match transformer.

5 Mount new transformer to the line match transformer mounting bracket (4 in Figure 6-7).

Note! It might be easier to mount the line match transformer by dismounting the line match transformer mounting bracket.

6 Route and connect the line match transformer power wires to the TB1 on the back of the power module. Each wire from the line match transformer is labeled with the corresponding socket number on TB1.

Caution

Make sure there are no tools or loose hardware left inside the generator before remounting the cover.

7 Remount the upper cabinet cover.

Replace Isolation Transformer (Single-phase Generator)

The isolation transformer is located underneath the line match transformer in the upper cabinet.

1 Turn off all power to the generator.

2 Remove the line match transformer as described in "Replace Line Match Transformer (Single-phase Generator)" on page 6-10 to page 6-10.

3 Disconnect all wires from the isolation transformer on TB6 and TB7 (see Figure 6-7) on the Power Relay Board.

4 Unscrew and retain the bolt holding the isolation transformer in place and remove the isolation transformer.

5 Mount new isolation transformer to the bottom of the power module using the bolt retained in step 4.

6 Connect all wires to the Power Relay Board. Each wire from the isolation transformer is labeled with the corresponding terminal number on the Power Relay Board TB6 and TB7 (see Figure 6-7).

Caution

Make sure there are no tools or loose hardware left inside the generator before remounting the cover.

7 Remount the upper cabinet cover.

6.6.2 3-phase Generators

The three line match transformers are located on the bottom of the lower cabinet and the isolation transformer is located on the bottom of the power module inside the upper cabinet.

Tools Required:

- set of open wrenches
- medium flat-tip screwdriver
- medium Phillips screwdriver
- needle-nose pliers

Warning

Turn off all electrical power to the generator. Also, make sure that power source is locked out and tagged "Equipment Being Serviced" before servicing the generator. You could get seriously injured if you do not.

Warning

Never perform any maintenance, repair, or service work inside the generator without first having performed the discharge procedure as described in "Discharge Procedure" on page 6-2.

1 Turn off all power to the generator.

Replace Line Match Transformer(s) (3-phase Generator)

2 Remove front panel according to “Removing Front Panel” on page 6-3.

The three line match transformers (1 in Figure 6-8) are located on the bottom of the lower cabinet. Each line match transformer is connected to it’s corresponding terminal block (2) on the terminal block bracket (3) above the transformers.

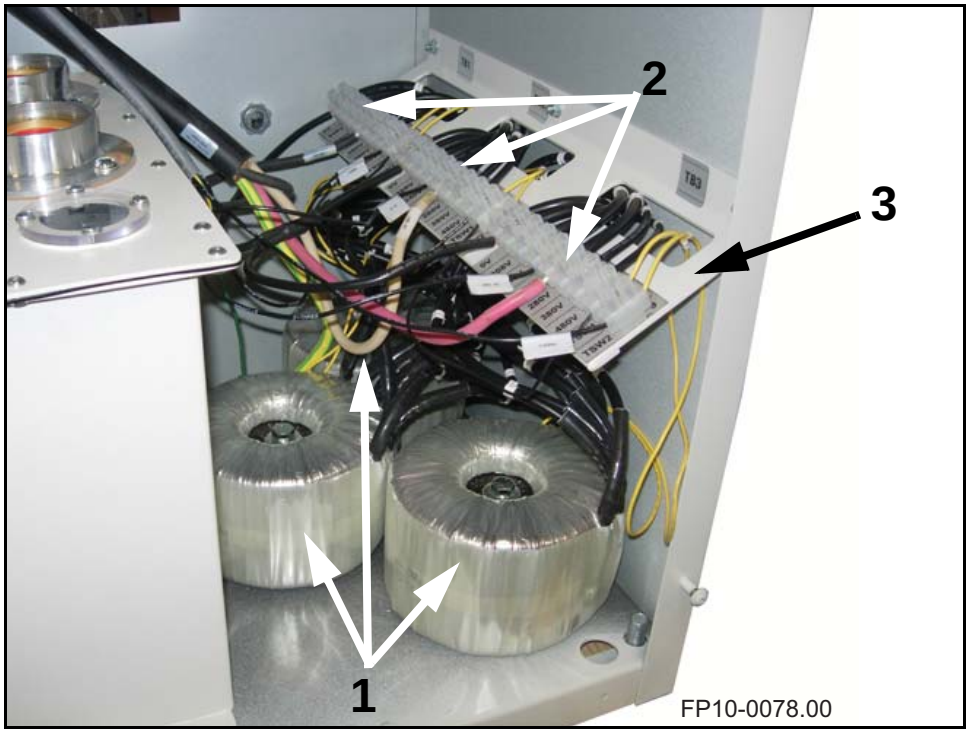

Figure 6-8. Location of line match transformers (3-phase generator).

3 At the applicable terminal block, disconnect the wires from the line match transformer(s) you are about to replace.

4 Unscrew and retain the bolt(s) holding the line match transformer(s) in place and remove the line match transformer(s).

Note!
When removing the line match transformer in the back (the one connected to TB1 on the terminal block bracket) you will have to remove the terminal block bracket to be able to get the old line match transformer out and fit the new line match transformer in place.

5 Connect the line match transformer(s) power wires to it’s corresponding terminal block on the terminal block bracket. Each wire from the line match transformer is labeled with the corresponding socket number on the terminal block.

Caution

Make sure there are no tools or loose hardware left inside the generator before remounting the cover.

6 Remount the front panel.

Replace Isolation Transformer (3-phase Generator)

The isolation transformer is located on the bottom of the power module inside the upper cabinet.

1 Turn off all power to the generator.

2 Remove upper cabinet cover according to “Removing Upper Cabinet Cover” on page 6-4.

3 Disconnect all wires from the isolation transformer (1 in Figure 6-9) on TB6 and TB7 (see Figure 6-9) on the Power Relay Board.

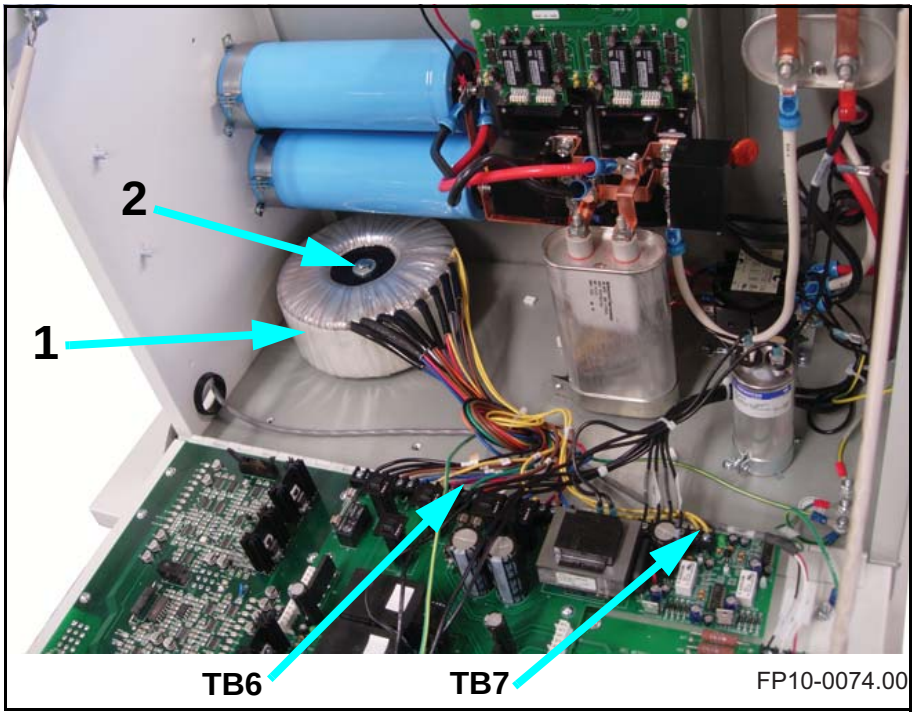

Figure 6-9. Location of isolation transformer (3-phase generator).

4 Unscrew and retain the bolt (2) holding the isolation transformer in place and remove the isolation transformer.

5 Mount new isolation transformer to the bottom of the power module using the bolt retained in step 4.

6 Connect all wires to the Power Relay Board. Each wire from the isolation transformer is labeled with the corresponding terminal number on the Power Relay Board TB6 and TB7 (see Figure 6-9).

Caution

Make sure there are no tools or loose hardware left inside the generator before remounting the cover.

7 Remount the upper cabinet cover.

6.7 Replacing Boards

There are five boards on the Anthem generator. They are all located inside the upper cabinet as shown in Figure 6-10.

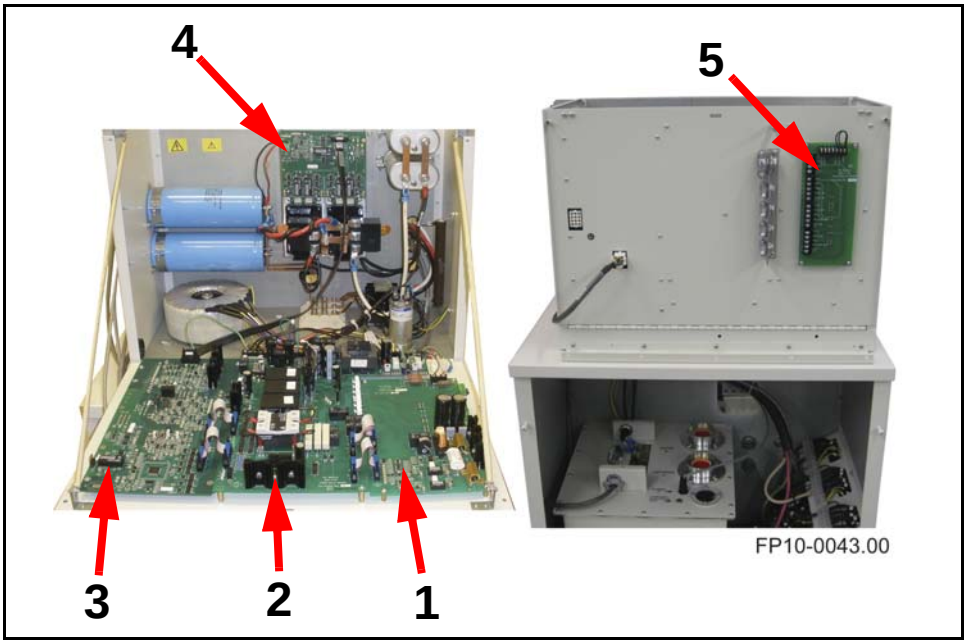

Figure 6-10. Board locations

1	Filament Board, part# 124-5131G1
2	Power Relay Board, part# 124-5136G1
3	Main Control Board, part# 124-5132G1
4	IPM driver Board, part# 124-5130G1
5	Room Interface Board, part# 124-5134G1

Caution

Always use an anti-static wrist strap when working on electrostatic sensitive devices.

6.7.1 Replacing the Filament Board (124-5131G1)

Tools Required:

- medium Phillips screwdriver

Warning

Turn off all electrical power to the generator. Also, make sure that power source is locked out and tagged "Equipment Being Serviced" before servicing the generator. You could get seriously injured if you do not.

Warning

Never perform any maintenance, repair, or service work inside the generator without first having performed the discharge procedure as described in "Discharge Procedure" on page 6-2.

Caution

Always use an anti-static wrist strap when working on electrostatic sensitive devices.

1. Turn off all power to the generator.
2. Remove upper cabinet cover according to Section "Removing Upper Cabinet Cover" on page 6-4.
3. Unplug all connectors to the Filament Board (1 in Figure 6-10).
4. Unscrew and retain the six Phillips head screws and remove the board.
5. Reassemble by reversing steps. Each connector for the Filament Board is labeled with the corresponding socket number on the Filament Board. Also make sure to fit the terminal connections on the back of the Filament board gently to the terminal on the back of the Room Interface Board.

6.7.2 Replacing the Power Relay Board (124-5136G1)

Tools Required:

- medium Phillips screwdriver

Warning

Turn off all electrical power to the generator. Also, make sure that power source is locked out and tagged "Equipment Being Serviced" before servicing the generator. You could get seriously injured if you do not.

Warning

Never perform any maintenance, repair, or service work inside the generator without first having performed the discharge procedure as described in "Discharge Procedure" on page 6-2.

Caution

Always use an anti-static wrist strap when working on electrostatic sensitive devices.

1. Turn off all power to the generator.
2. Remove upper cabinet cover according to Section "Removing Upper Cabinet Cover" on page 6-4.
3. Disconnect all leads and ribbon cables to the Power Relay Board (2 in Figure 6-10).
4. Unscrew and retain the five Phillips head screws. Separate each of the board's three mounting pins from the board by pinching the tab on each pin and lifting the board over the tab. Remove the board.
5. Reassemble by reversing steps. Each connection for the Power Relay Board is labeled with the corresponding terminal number on the Power Relay Board.

6.7.3 Replacing the Main Control Board (124-5132G1)

Tools Required:

- medium Phillips screwdriver

Warning

Turn off all electrical power to the generator. Also, make sure that power source is locked out and tagged "Equipment Being Serviced" before servicing the generator. You could get seriously injured if you do not.

Warning

Never perform any maintenance, repair, or service work inside the generator without first having performed the discharge procedure as described in "Discharge Procedure" on page 6-2.

Caution

Always use an anti-static wrist strap when working on electrostatic sensitive devices.

1. Turn off all power to the generator.
2. Remove upper cabinet cover according to Section "Removing Upper Cabinet Cover" on page 6-4.
3. Unplug all connectors to the Main Control Board (3 in Figure 6-10).
4. Unscrew and retain the nine Phillips head screws and remove the board.
5. Reassemble by reversing steps.

6.7.4 Replacing the IPM Driver Board (124-5130G1)

Tools Required:

- medium flat head screwdriver

Warning

Turn off all electrical power to the generator. Also, make sure that power source is locked out and tagged "Equipment Being Serviced" before servicing the generator. You could get seriously injured if you do not.

Warning

Never perform any maintenance, repair, or service work inside the generator without first having performed the discharge procedure as described in "Discharge Procedure" on page 6-2.

Caution

Always use an anti-static wrist strap when working on electrostatic sensitive devices.

1. Turn off all power to the generator.
2. Remove upper cabinet cover according to Section "Removing Upper Cabinet Cover" on page 6-4.
3. Unplug all connectors to the IPM Driver Board (4 in Figure 6-10).
4. Unscrew and retain the four flat head screws. The IPM board is connected to the two Intelligent Power Modules on the lower part of the board, gently pull the board straight out to disconnect and remove it.
5. Reassemble by reversing steps. Make sure to fit the four guide pins on the Intelligent Power Modules into the four holes on the IPM Driver board to ensure that the board connects properly to the Intelligent Power Modules.

6.7.5 Replacing the Room Interface Board (124-5134G1)

Tools Required:

- medium Phillips screwdriver

Warning

Turn off all electrical power to the generator. Also, make sure that power source is locked out and tagged "Equipment Being Serviced" before servicing the generator. You could get seriously injured if you do not.

Warning

Never perform any maintenance, repair, or service work inside the generator without first having performed the discharge procedure as described in "Discharge Procedure" on page 6-2.

Caution

Always use an anti-static wrist strap when working on electrostatic sensitive devices.

1. Turn off all power to the generator.
2. Remove upper cabinet cover according to Section "Removing Upper Cabinet Cover" on page 6-4.
3. Disconnect all connections to the Room Interface Board (5 in Figure 6-10).
4. Unscrew and retain the four Phillips head screws and remove the board.
5. Reassemble by reversing steps. Make sure to fit the terminal connections on the back of the Room Interface Board gently to the terminal on the back of the Filament Board.

Troubleshooting

7

7.1 Introduction

This chapter contains troubleshooting tables and charts that will guide you through most of the problems that may be related to the generator. Included are also status/error messages along with the possible solution(s) to the error.

Warning

All service and maintenance including the procedures described within this chapter, are to be performed by qualified service personnel only.

7.2 Discharge Procedure

When ever you are performing maintenance, repair, or service on the generator that requires you to open the upper or lower cabinet you must always make sure the unit is discharged. Discharge the generator according to Section 4.1.1 on page 4-3.

7.3 Troubleshooting Index & Charts

Use the following troubleshooting index and troubleshooting charts as an aid in solving your generator's malfunction. For some of the problems the Anthem control console will display status/error messages on the LCD, indicated by [S/E MSG] in the table below. The table below lists messages that might occur along with the possible solution(s) to the error.

Status/error messages may be cleared by pressing the RESET button. (The RESET button is only activated once a message is displayed).

Warning

Never perform any maintenance, repair, or service work inside the generator without first having performed the discharge procedure as described in "Discharge Procedure" on page 7-2.

Note!
Before beginning troubleshooting check all DC power supply voltages as described in "Operational Testing" on page 2-35.

Problem	Refer to Page:
No ready light	7-4
Long exposure times with light films	7-5
Long exposure times with dark films	7-5
Anode heat limit [S/E MSG]	7-5
X-ray tube overheat [S/E MSG]	7-5
Exceeds tube limit [S/E MSG]	7-5
Exceeds limit [S/E MSG]	7-5
Exceeds prep time limit [S/E MSG]	7-5
No feedback cable [S/E MSG]	7-5
kV low fault [S/E MSG]	7-6
kV high fault [S/E MSG]	7-6
kV imbalance [S/E MSG]	7-7
mA low fault [S/E MSG]	7-8
mA high fault [S/E MSG]	7-8
Door open [S/E MSG]	7-8
AEC BUT Time Error	7-8
AEC BUT mAs Error	7-8
ION Chamber Fault	7-8
Inverter Flash Fault	7-9

Problem	Possible Cause	Remedy
No ready light	Lack of a rotor OK signal as well as the door or collimator interlocks (all Low True) will inhibit the Ready light.	Check the door and collimator interlocks.
	Some pre-existing fault conditions that have already been latched by hardware will inhibit generation of the PREP request signal by the CPU.	Do you have a valid PREP command? Do you hear the activation of any relays when the <PREP> button is pressed? The PREP command activates several heavy relays in the rotor boost and run circuitry that can be heard from the outside of the power module.
	An open X-Ray tube thermal switch will inhibit the rotor boost and run cycle.	***Is the rotor running?*** 1.Is the x-ray tube thermal switch open? 2.Check Fuse F4 on Power/Relay Board. 3.Check for correct connections for main, common, and phase wires. ***Do you have filament current?*** *On the Power/Relay Board 124-5136G1 board (schematic 124-5136):* 1.Check presence of regulated DC supply voltage for filament drive primary switching circuitry (TP8 to TP7 is +50V, TP8 to TP9 is -50V). 2.Check Circuit Breaker CB2 and CB3. 3.Do relays K9 close on PREP? *On the Filament board 124- 5131G1 (schematic 124-5131):* 1.Check Presence of drive signal at TP4 and TP5. 2.LED4 light on when prep? 3.Check Fuse F3.

Problem	Possible Cause	Remedy
Long exposure times with light films	Low Tube Current. Low kV.	Incorrect Filament drive – Check DC supply to Filament board as well as switching waveform. Possible feedback or reference voltage errors – Check reference and feedback voltages on Main Control board.
Long exposure times with dark films	Incorrect mA feedback, resulting in excessive actual mAs. mAs timing error.	Check mA feedback for accuracy. 1V = 100 mA for larger and 1V = 20mA for Small filament. Check mAs with Dynalyzer™ or mAs meter.
Anode heat limits	Anode has exceeded programmed heat warning level.	Wait for anode to cool.
X-ray tube overheat	Thermal switch inside x-ray tube is open due to overheating.	Consult your service representative.
Exceeds tube limit	Requested parameter not allowed as tube kW limit has been reached.	None.
Exceeds limit	Requested parameter not allowed as tube kW limit has been reached.	None.
Exceeds prep time limit	Generator has been in prep state too long.	Reduce length of time in prep state.
No feedback	Feedback cable between H.V. tank and Power Module has been disconnected.	Check connection between H.V. tank and J14 on Power Module.

Problem	Possible Cause	Remedy
kV low fault	The kV Low Fault signal indicates that the kV feedback from H.V. tank is 10% lower than the selected kV from Console.	Turn the unit OFF then back ON to reset the generator and clear the fault message from the display. Go to Calibration mode, scope the kV feedback waveform at test point TP6A (use TP22A as COM) on the Main Control board 124-5132G1 to see if the kV is 10% lower than that the selected kV. If there is no waveform at TP6A, check the feedback cable connecting the H.V. tank to J14 on Main Inverter board 124-5132G1. If wave form at TP6A is too low, re-calibrate as described in "Calibration Procedure" on page 5-2.
kV high fault	The kV High Fault signal indicates that the kV feedback from H.V. tank is 10% or more higher than the selected kV from Console.	Turn the unit OFF then back ON to reset the generator and clear the fault message from the display. Go to Calibration mode, scope the kV feedback waveform at test point TP6A on the Main Control board 124-5132G1 to see if the kV is 10% or more higher than that the selected kV. If the waveform at TP6A is too high, re calibrate as described in "Calibration Procedure" on page 5-2.

Problem	Possible Cause	Remedy
kV imbalance	The kV Imbalance Fault signal indicates that there is an imbalance between the anode and cathode feedback waveforms. It can be caused by: • a defective X-ray tube • high voltage cables • faulty high-tension transformer • Mis-wire or bad connection at H.V. tank feedback board.	Turn the unit OFF then back ON to reset the generator and clear the fault message from the display. 1.Connect 2 channels of an oscilloscope to KV +/- to TP2 and TP3 on the Main Control board. Use TP1 as COM. 2.Go to Calibration mode, make an exposure. Based on a voltage interpretation of 1V=10kV, the anode and cathode waveforms should be equal in amplitude. See Figure 1, "Proper kV Balance Anode to Cathode" 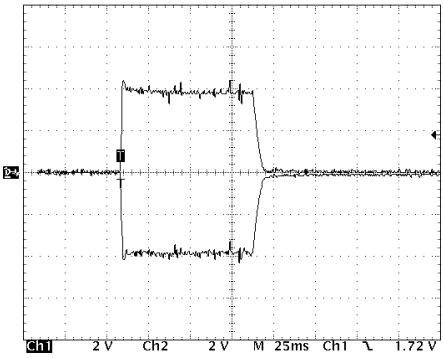 *Figure 7-1. Figure 1: Proper kV Balance - Anode to Cathode* 3.If there is no mis-wire or no bad connection at H.V. tank feedback board and the imbalance still occurs, the H.V. tank is probably defective.

Problem	Possible Cause	Remedy
mA low fault	The mA Low Fault signal indicates that the mA feedback from H.V. tank is 10% or more lower than the selected mA from Console.	Turn the unit OFF then back ON to reset the generator and clear the fault message from the display. Go to Calibration mode, scope the mA feedback waveform at test point TP47A (use TP22B as COM) on the Main Control board 124-5132G1 to see if the mA is 10% or more lower than that the selected mA. If there is no waveform at TP47A, check the feedback cable connecting the H.V. Tank to J14 on Main Control board 124-5132G1. If waveform at TP47A is too low, re calibrate as described in "Calibration Procedure" on page 5-2.
mA high fault	The mA High Fault signal indicates that the mA feedback from H.V. tank is 10% or more higher than the Max mA of the tube rating.	Turn the unit OFF then back ON to reset the generator and clear the fault message from the display. Go to Calibration mode, scope the mA feedback waveform at test point TP47A (use TP22B as COM) on the Main Control board 124-5132G1 to see if the mA is too high. If waveform at TP47A is too high, re calibrate as described in "Calibration Procedure" on page 5-2.
Door open	Door is open.	Close door.
AEC BUT Time Error	AEC exposure exceeded allowed back up time.	Press reset button.Check exposure technique settings.
AEC BUT mAs error.	AEC exposure exceeded allowed back up mAs.	Press reset button. Check exposure technique settings.
ION Chamber Fault.	Generator has detected no or very low AEC ramp feedback from AEC device.	Press reset button. Make sure that x-ray tube is pointing towards selected AEC device - table or wallstand. Check connections between ion chamber and generator.

Problem	Possible Cause	Remedy
Inverter Flash Fault	No operating software on main control board or wrong operating software	Reload factory default software.
ROTOR NOT READY		Consult your service representative.
FILAMENT HIGH FAULT		Consult your service representative.
NO FILAMENT FAULT		Consult your service representative.
SOFT-CHARGE FAULT		Consult your service representative.
FILAMENT PBC FAULT		Consult your service representative.
IPM FAULT		Consult your service representative.
BUTTON FAULT		Consult your service representative.
COLLIMATOR ERROR		Consult your service representative.
TABLE BUCKY NOT READY		Consult your service representative.
WALL BUCKY NOT READY		Consult your service representative.

Electrical Schematics

8

8.1 List of Electrical Schematics

This chapter contains the electrical schematics for the generator.

Drawing Number	Drawing Description	# Sheets	Current rev.
034-5089	Wiring Diagram, 1-phase	1	2
034-5090	Wiring diagram, 3-phase	1	2
124-5130	IPM Driver	1	0
124-5131	Filament/Rotor Driver	1	0
124-5132	Main Control Board	4	1
124-5133	Control Console	1	0
124-5134	Room Interface	1	0
124-5136	Power Distribution/Relay	1	1
124-5137	Rectifier/Divider - Anode	1	0
124-5138	HV Tank Capacitor	1	0
124-5139	HV Tank Interface	1	0
124-5140	Rectifier/Divider - Cathode	1	0

Table 8-1: List of Schematics

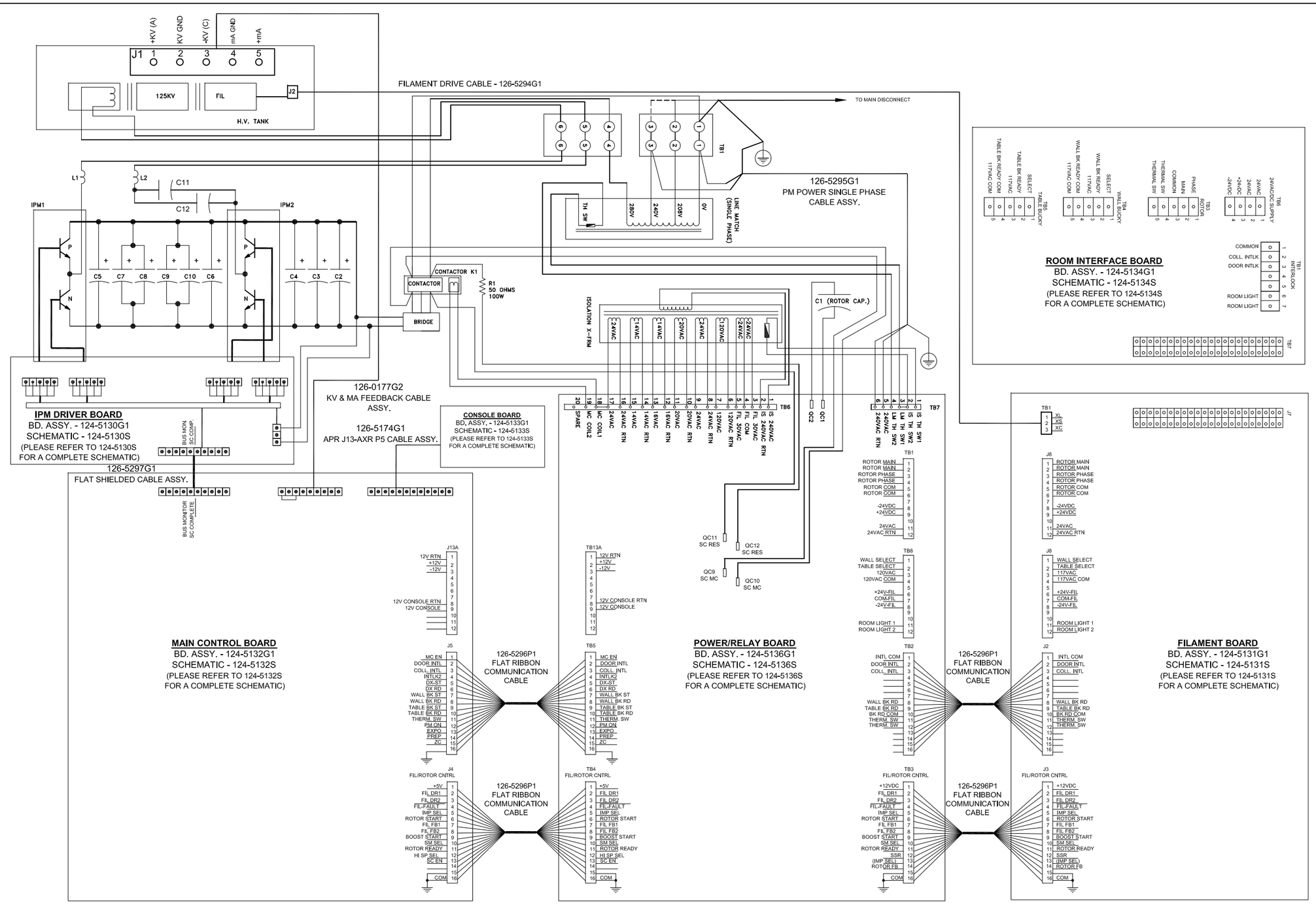

WIRING DIAGRAM, SINGLE PHASE ANTHEM GENERATOR
034-5089S1R2
REVISION 2 8/18/09

DEL MEDICAL
ROSELLE, ILLINOIS

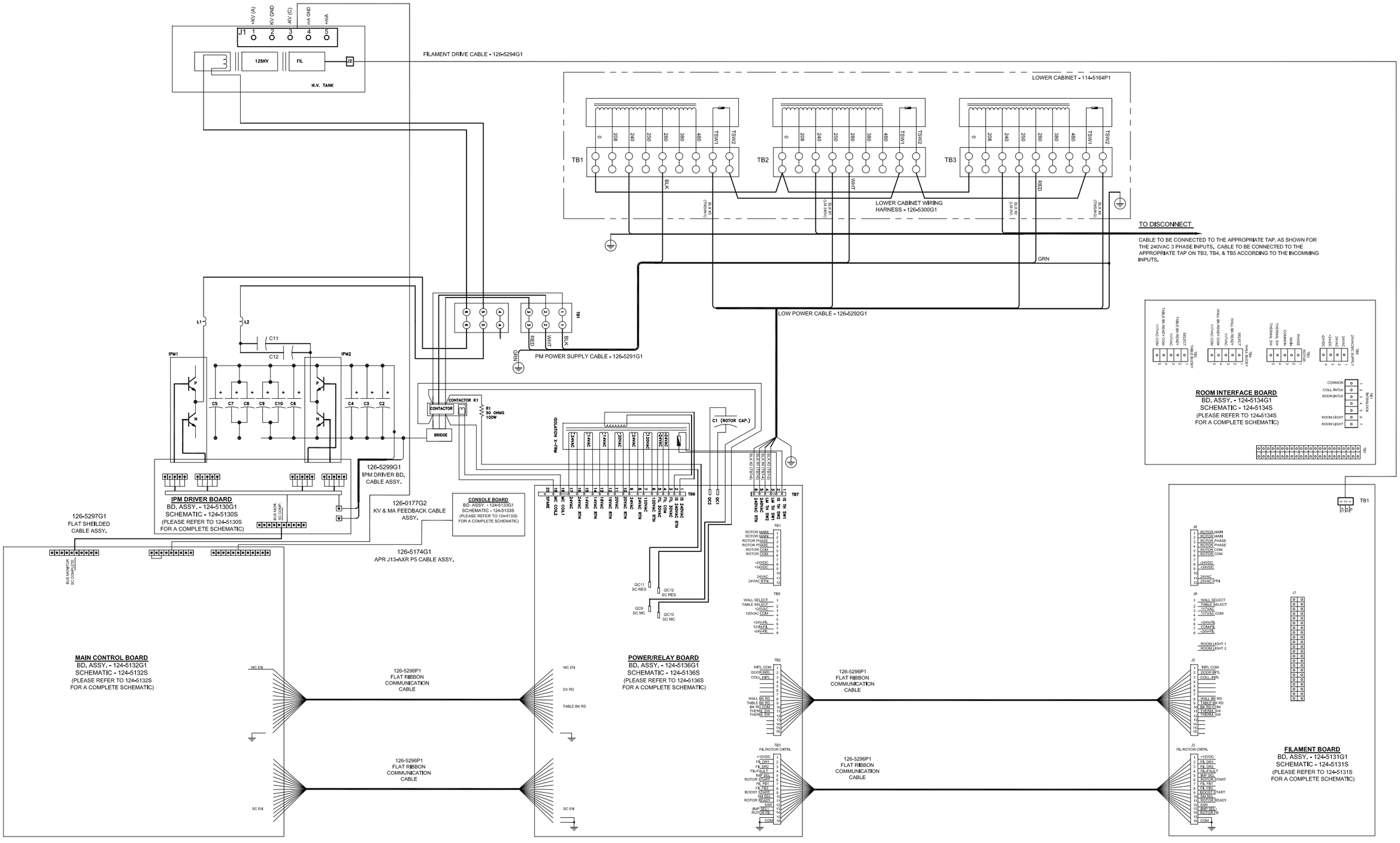

WIRING DIAGRAM, THREE PHASE ANTHEM GENERATOR
034-5090S1R2
REVISION 2 8/18/09

DEL MEDICAL
ROSELLE, ILLINOIS

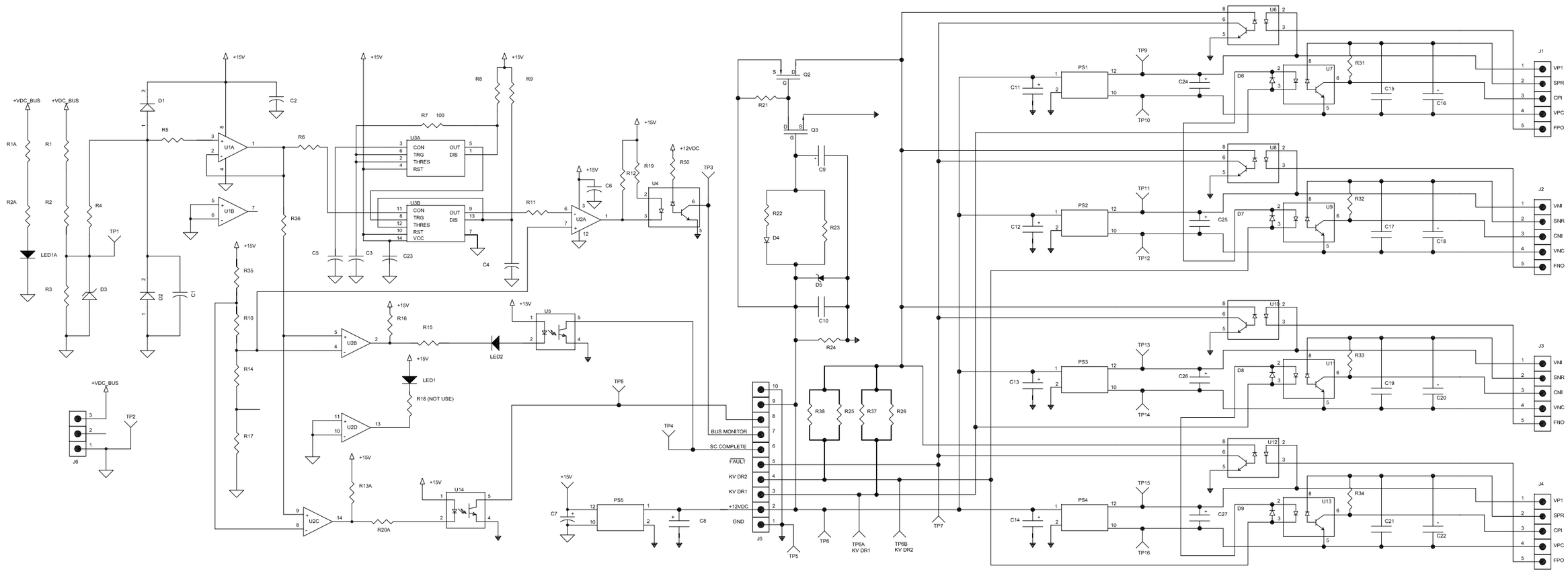

IPM DRIVER SCHEMATIC
124-5130SS1MR0
REV. 0 4-2-09

DEL MEDICAL
FRANKLIN PARK, IL

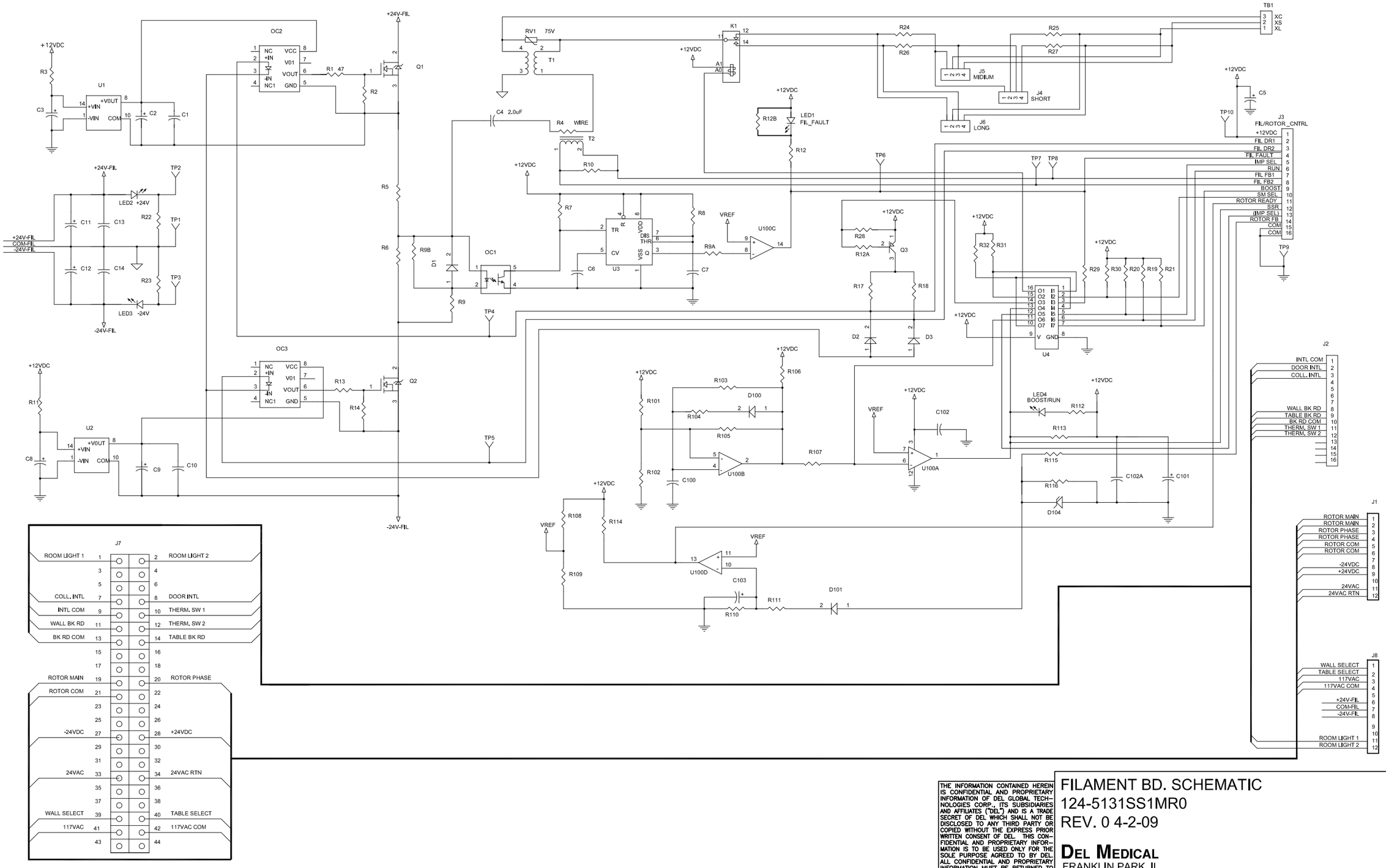

FILAMENT BD. SCHEMATIC
124-5131SS1MR0
REV. 0 4-2-09

DEL MEDICAL
FRANKLIN PARK, IL

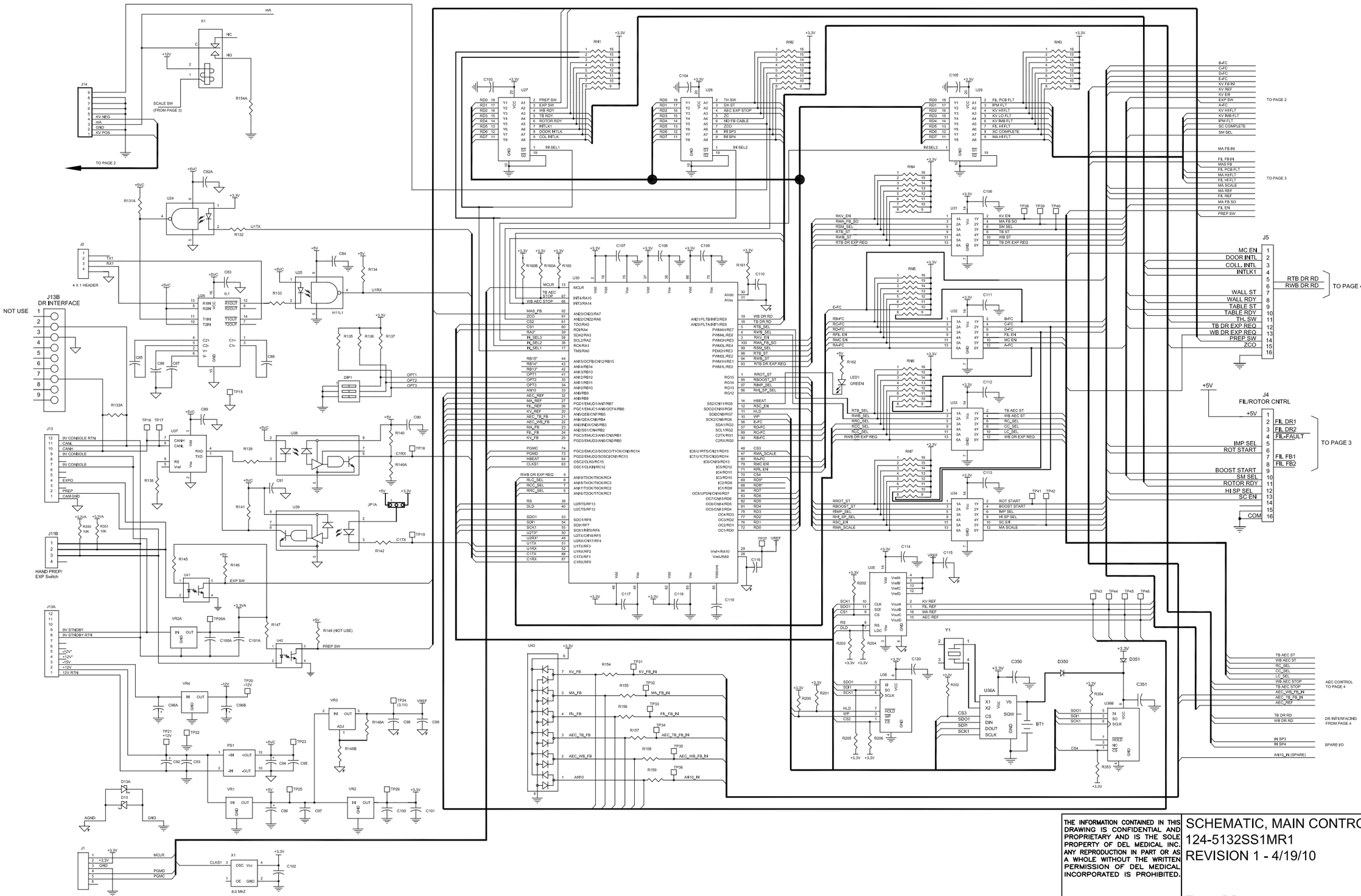

SCHEMATIC, MAIN CONTROL BD.
124-5132SS1MR1
REVISION 1 - 4/19/10

DEL MEDICAL
ROSELLE, ILLINOIS

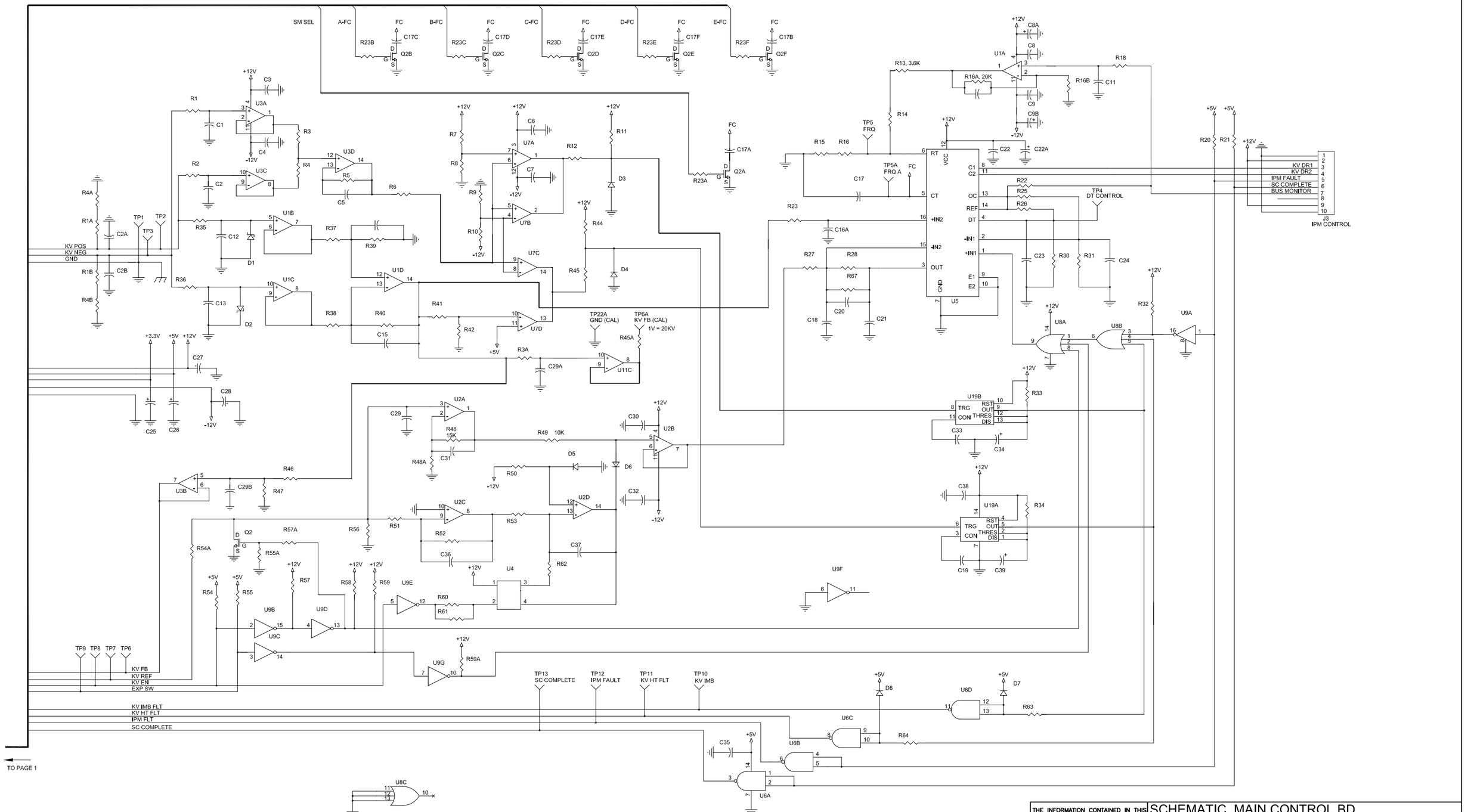

SCHEMATIC, MAIN CONTROL BD.
124-5132SS2MR1
REVISION 1 - 4/19/10

DEL MEDICAL
ROSELLE, ILLINOIS

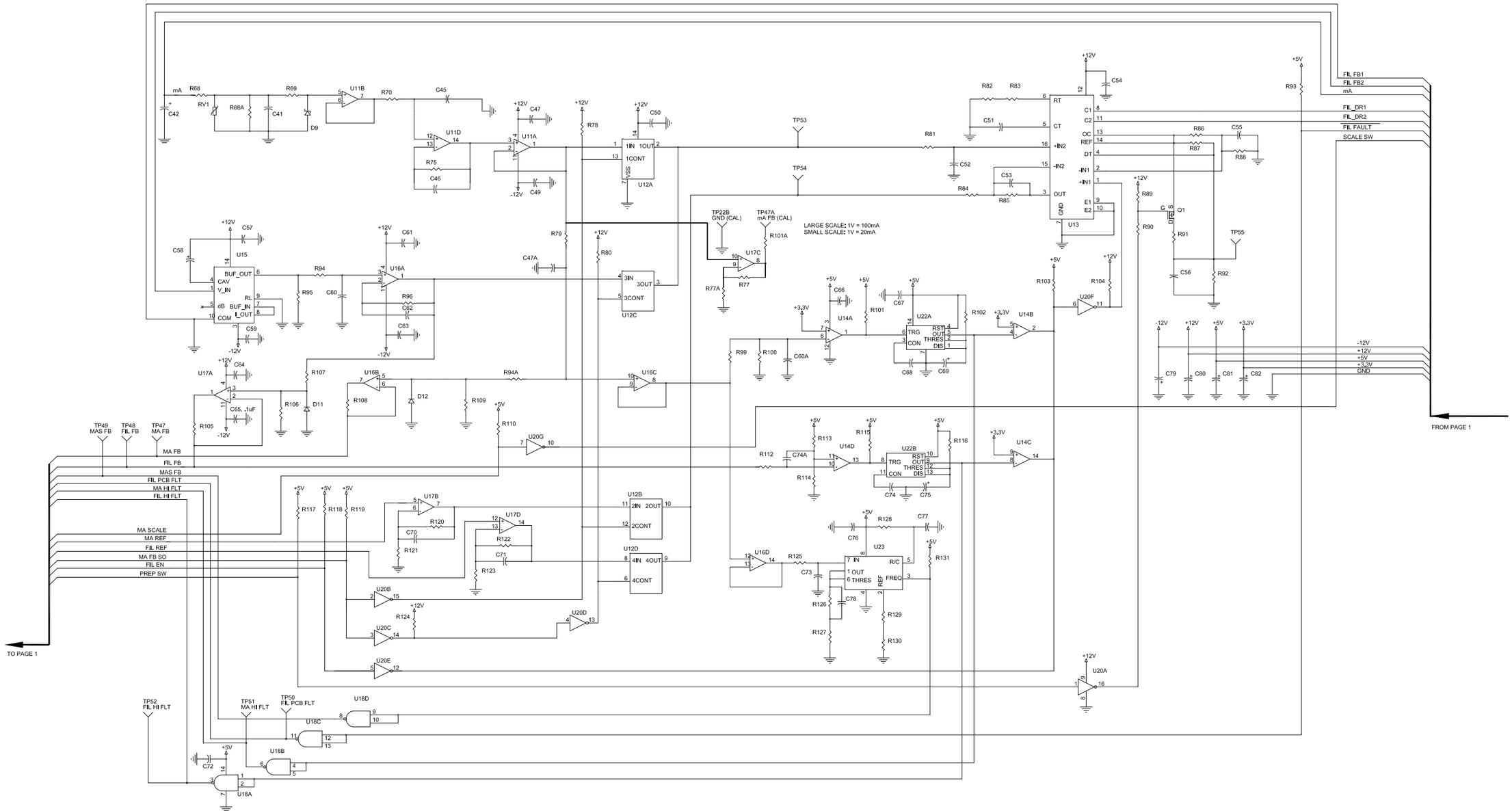

SCHEMATIC, MAIN CONTROL BD.
124-5132SS3MR1
REVISION 1 - 4/19/10

DEL MEDICAL
ROSELLE, ILLINOIS

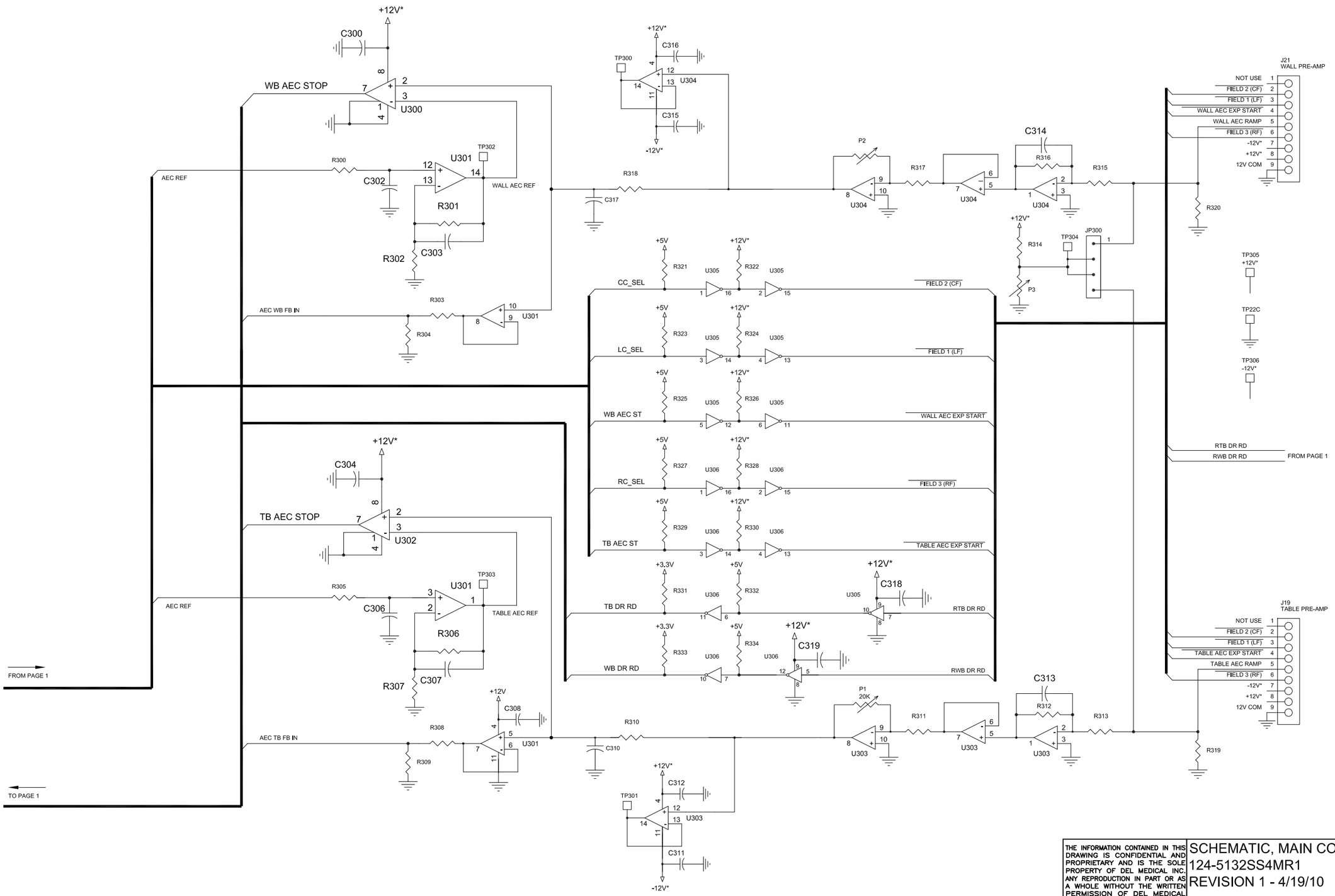

SCHEMATIC, MAIN CONTROL BD.
124-5132SS4MR1
REVISION 1 - 4/19/10

DEL MEDICAL
ROSELLE, ILLINOIS

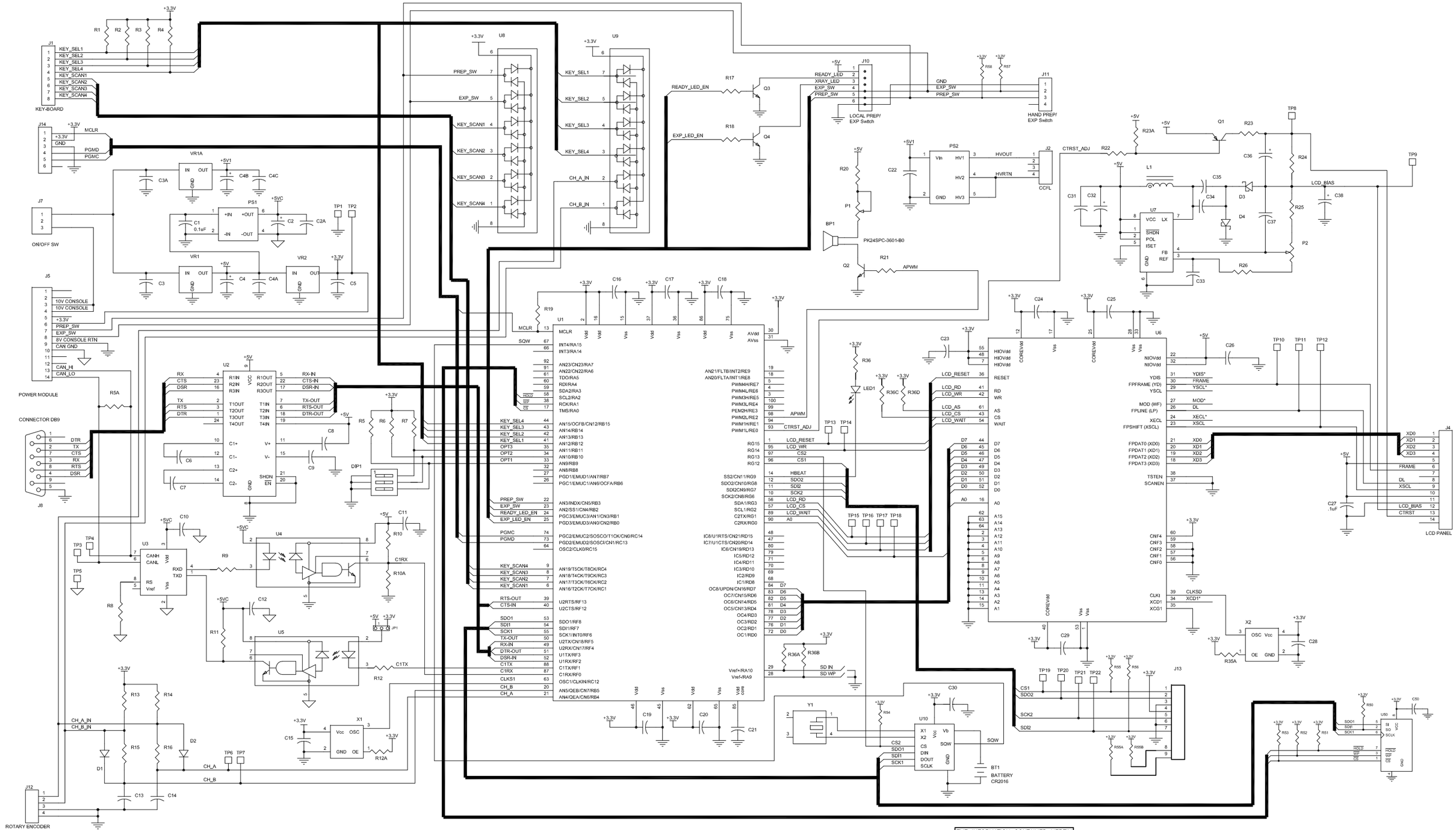

CONTROL CONSOLE BD. SCHEMATIC

124-5133SS1MR0

REV. 0 4-2-09

DEL MEDICAL

FRANKLIN PARK, IL

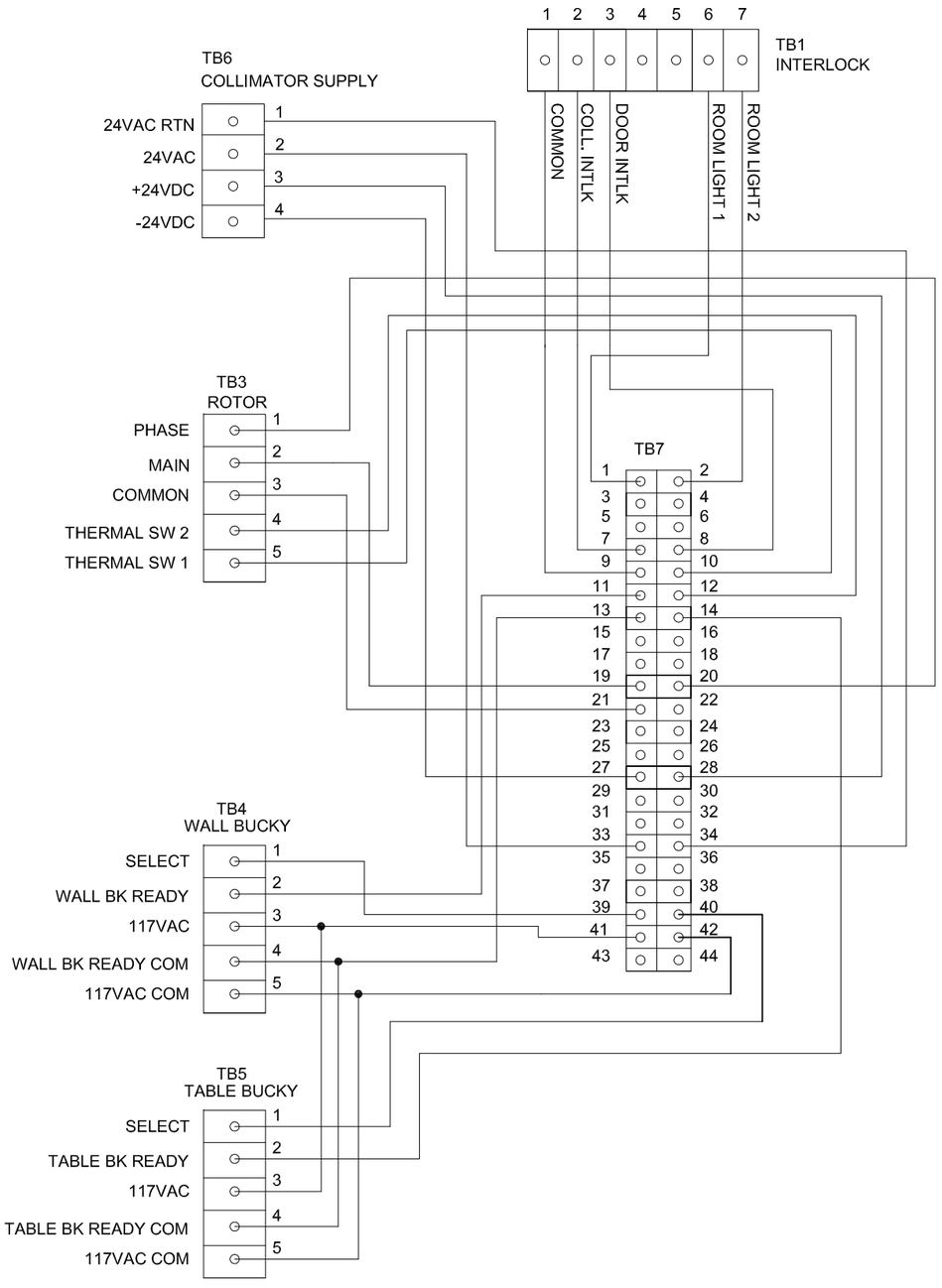

ROOM INTERFACE BD. SCHEMATIC
124-5134SS1MR0
REV. 0 4-2-09

DEL MEDICAL
FRANKLIN PARK, IL

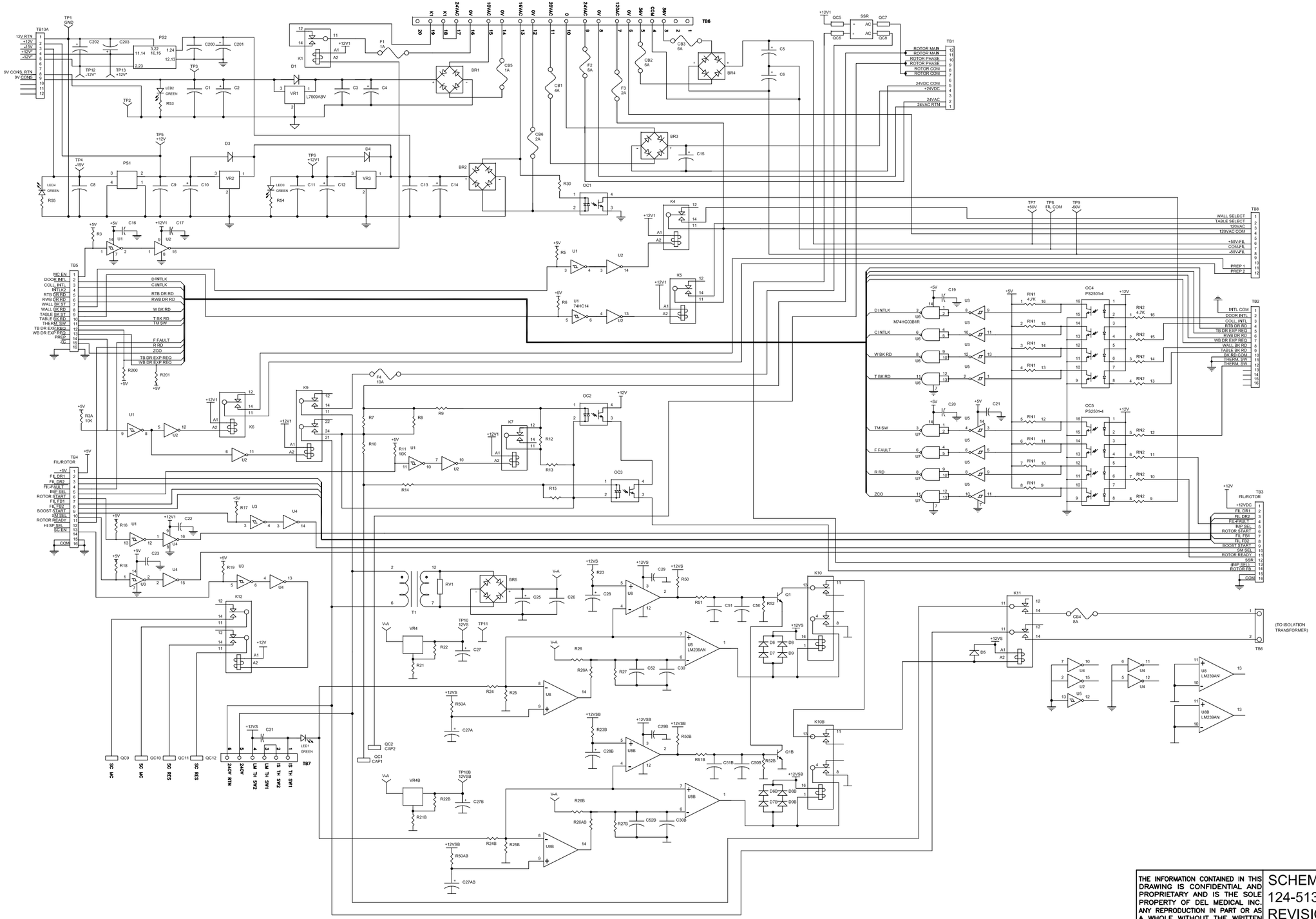

THE INFORMATION CONTAINED IN THIS DRAWING IS CONFIDENTIAL AND PROPRIETARY AND IS THE SOLE PROPERTY OF DEL MEDICAL INC. ANY REPRODUCTION IN PART OR AS A WHOLE WITHOUT THE WRITTEN PERMISSION OF DEL MEDICAL INCORPORATED IS PROHIBITED.

SCHEMATIC, POWER DISTRIBUTION / RELAY
124-5136SS1MR1
REVISION 1 - 4/20/10

DEL MEDICAL
ROSELLE, ILLINOIS

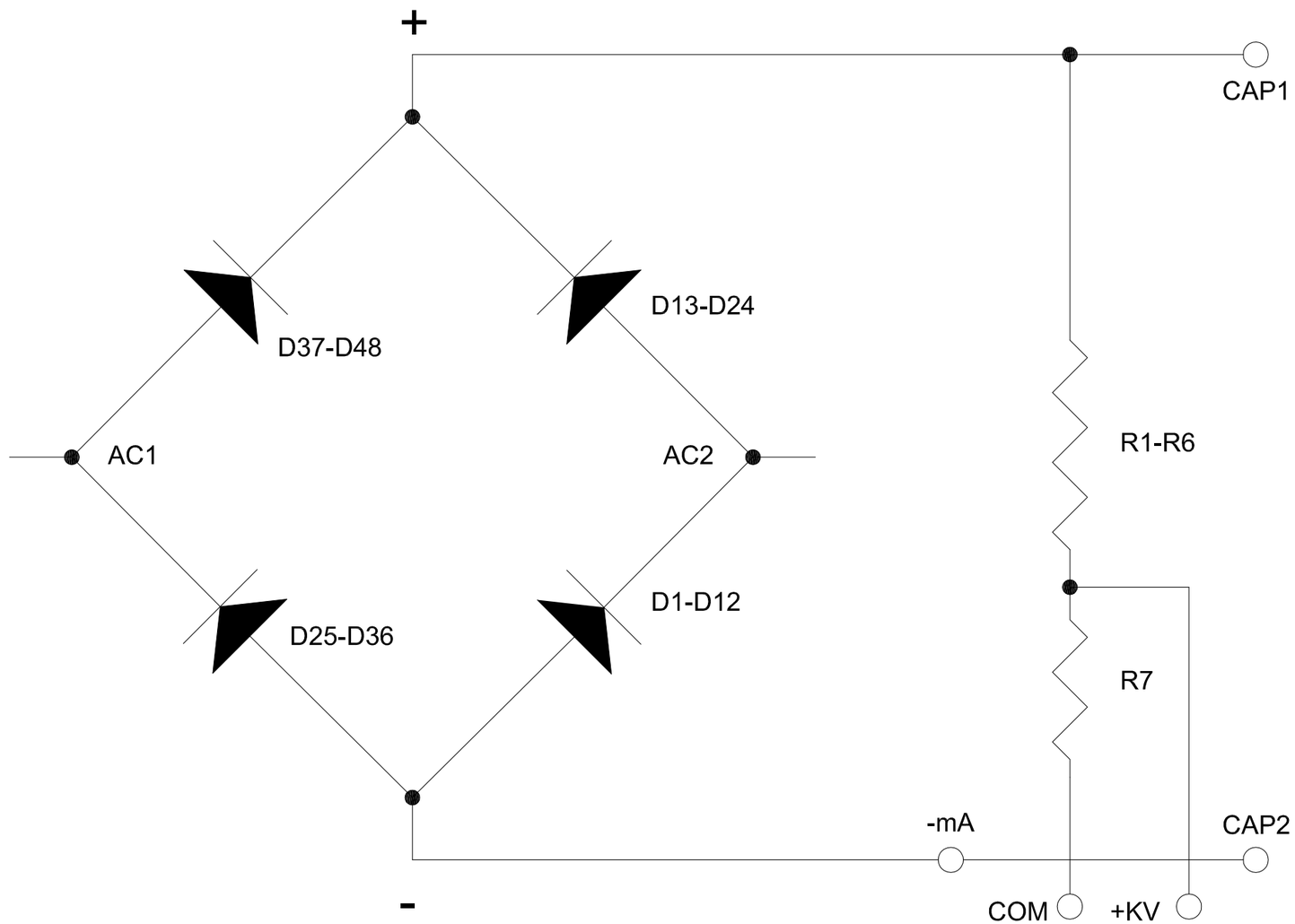

ANODE RECTIFIER / DIVIDER SCHEMATIC
124-5137SS1MR0
REV. 0 4-2-09

DEL MEDICAL
FRANKLIN PARK, IL

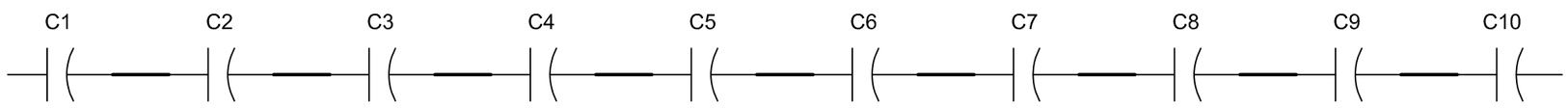

H.V. TANK CAPACITOR SCHEMATIC
124-5138SS1MR0
REV. 0 4-2-09

DEL MEDICAL
FRANKLIN PARK, IL

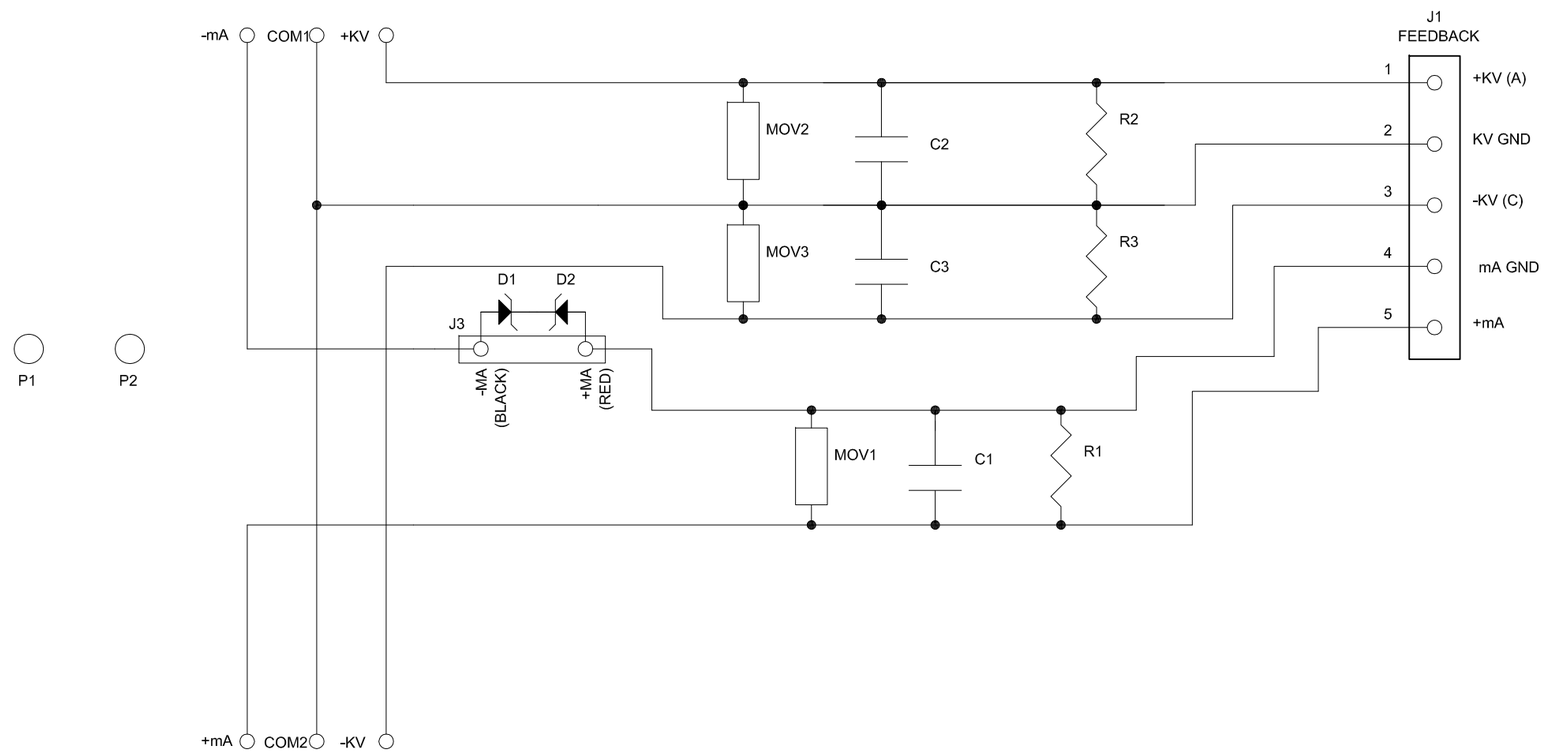

H.V. TANK INTERFACE BD. SCHEMATIC
124-5139SS1MR0
REV. 0 4-2-09

DEL MEDICAL
FRANKLIN PARK, IL

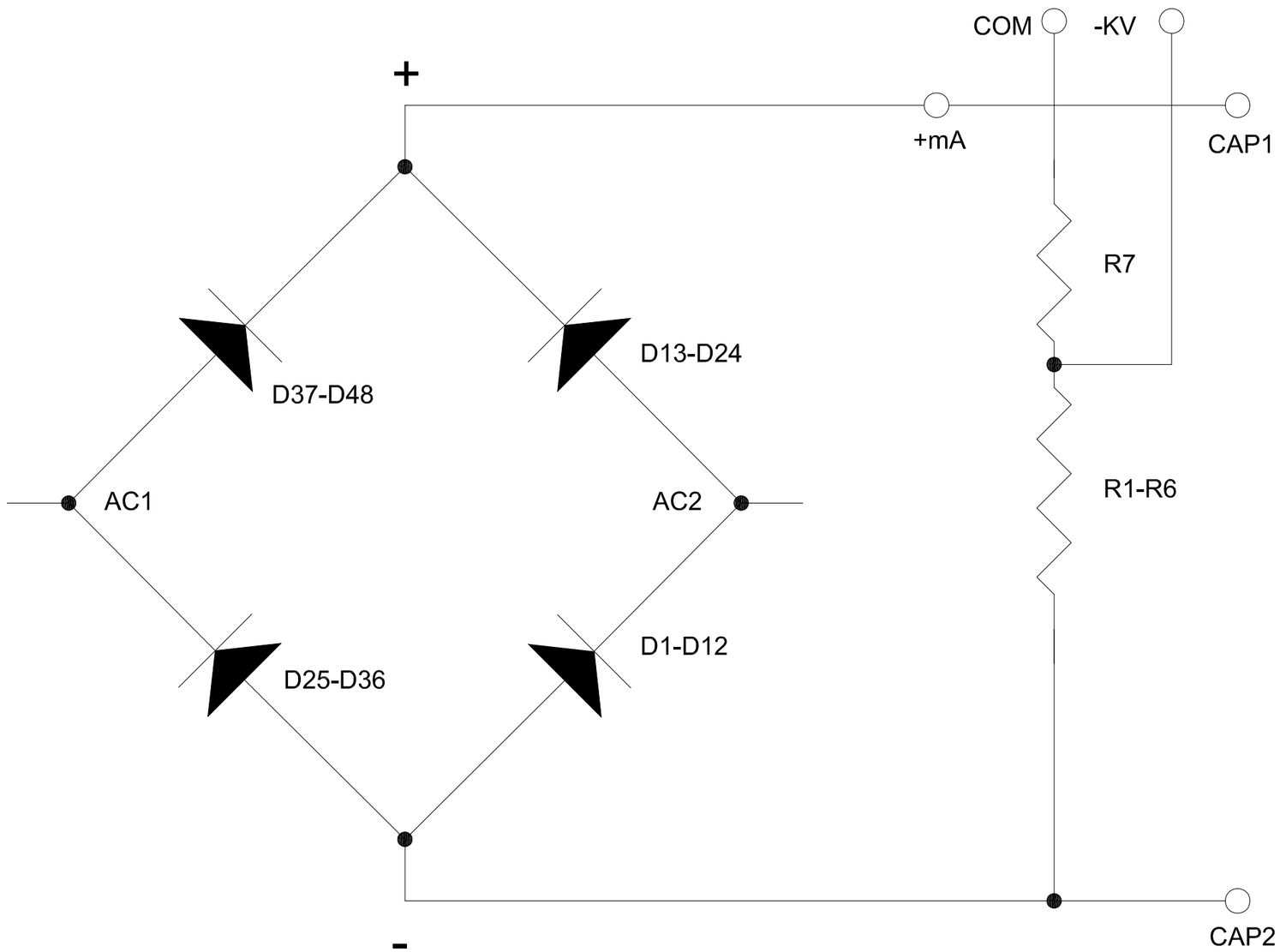

CATHODE RECTIFIER / DIVIDER SCHEMATIC
124-5140SS1MR0
REV. 0 4-2-09

DEL MEDICAL
FRANKLIN PARK, IL

Illustrated Parts List

9

9.1 Ordering Parts

For your convenience, replacement parts, fluids, and accessories can be ordered from Del Medical Systems by telephone, by fax, or through our Internet ordering service. Please have the following information available to ensure quick, easy, and accurate service.

- Your name and telephone number
- Your P.O. (Purchase Order) number
- Your preferred method of delivery
- The part number and quantity of all items required

9.1.1 To Order by Telephone

Call Del Medical Systems at 1-800-800-6006 and speak to one our Customer Service Representatives. Telephone hours are 8:00 a.m. to 5:00 p.m., Monday through Friday (Central Standard or Daylight Time).

9.1.2 To Order by Fax

Fax your order to Del Medical Systems at 1-800-288-7011. Fax orders can be sent 24 hours a day, 7 days a week.

9.2 How to Use This Parts List

9.2.1 General Part Numbers

This chapter contains all part numbers necessary to order generator replacement parts and assemblies.

The parts lists follow the illustration for a particular assembly and represent components of that assembly. The number listed in the quantity column is the number of the specific part required to complete the assembly and may not reflect the quantity needed for the entire system.

The lists are divided into four columns. The item/index numbers refer to the identification number located on the drawing. The part number is the Del Medical part number, used to identify the part for ordering. The part description column lists each part name, and the quantity column lists the quantity of that part used in that particular assembly.

9.3 Index of Assemblies

Assembly Description	Part Number
Single phase power module	110-5115R3
Three phase power module	110-5116R3
HV tank	110-5105
Base power module	112-5469
Door power module	112-5471R1
Inverter power module	112-5472
Single phase lower cabinet	112-5484G1
Three phase lower cabinet	112-5484G2

Table 9-1: Assembly Index

UNLESS OTHERWISE SPECIFIED				DRG	TITLE ASM, POWER MODULE, 1PH	110–5115
SURF.	TOLERANCES ON DIMENSIONS			D	FIRST MADE FOR ANTHEM — SCALE:	SHT NO. 1 CONT ON SHT 2
	.XX DEC. ± .015	.XXX DEC. ± .005	ANGLES ± 1/2°	SIZE		

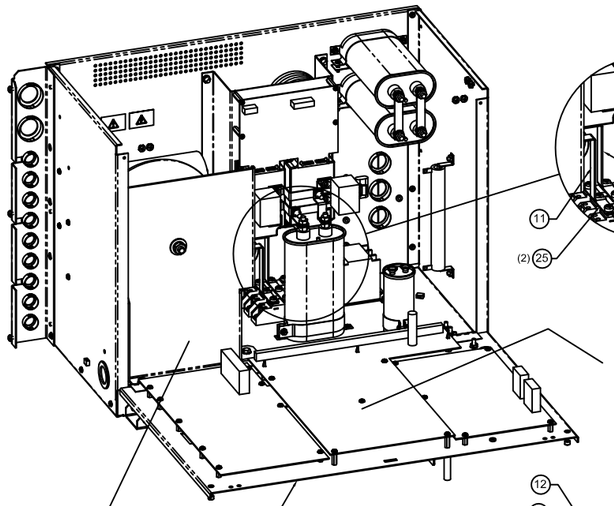

DETAIL A

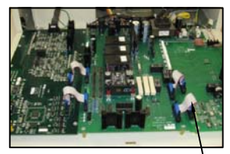

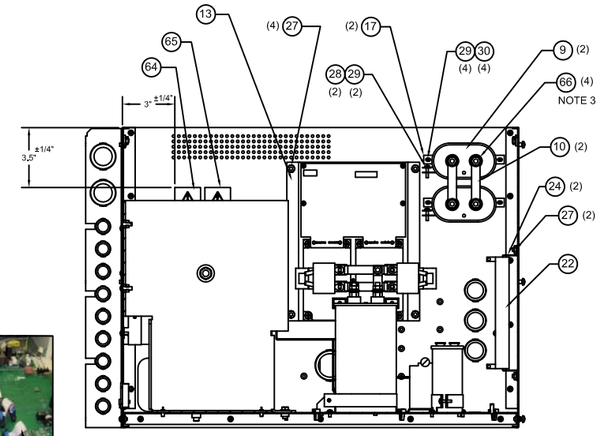

SECTION A - A

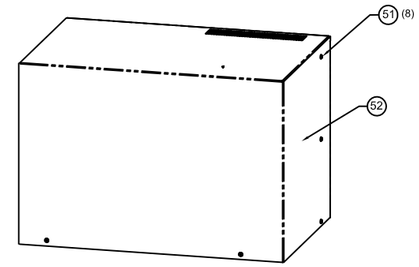

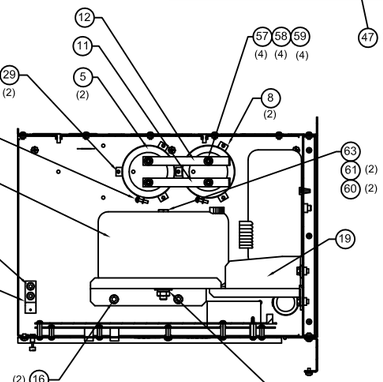

SECTION D - D

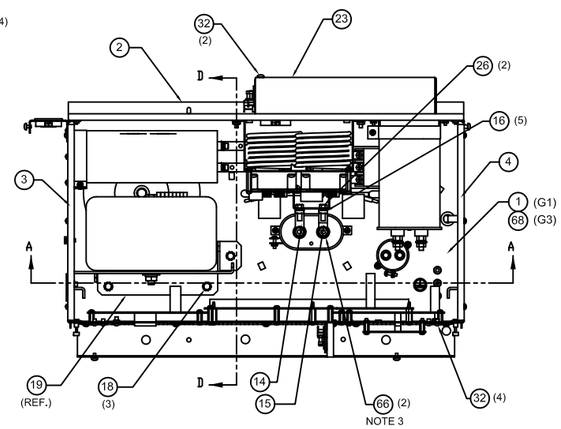

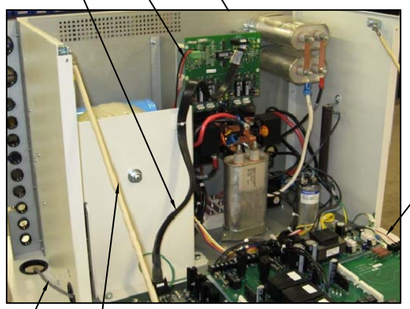

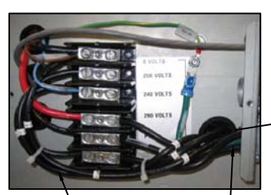

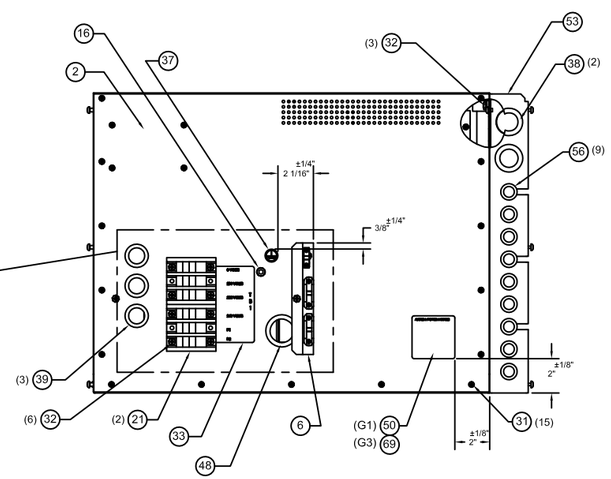

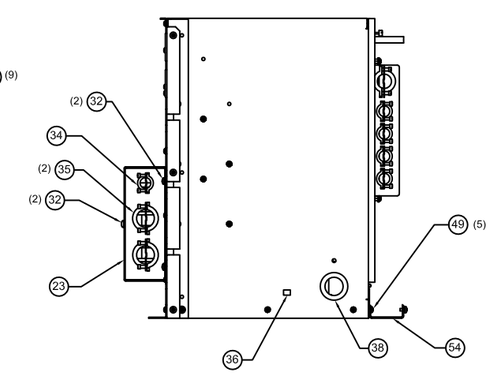

ITEM NO.	PART NUMBER	DESCRIPTION	QTY. G1	QTY. G3
1	112-5469G1	ASM, BASE, POWER MODULE	1	-
2	203-5204P1	PANEL, BACK	1	1
3	210-5084P1	PANEL, LEFT SIDE	1	1
4	210-5085P1	PANEL, RIGHT SIDE	1	1
5	611-0029P6	CAPACITOR, 450VDC, 3900UF	2	2
6	203-5202P1	BRKT, TERM. BLOCK COVER	1	1
7	112-5471G1	ASM, POWER MODULE DOOR	1	-
8	642-0021P1	CLAMP, CAPACITOR	2	2
9	4610-0019P2	CAPACITOR	2	2
10	212-5014P1	BUSS BAR, CAPACITOR	2	2
11	212-5008P1	BUSS BAR, CAPACITOR, FRONT	1	1
12	212-5009P1	BUSS BAR, CAPACITOR, REAR	1	1
13	112-5472G1	ASM, INVERTER, POWER MODULE	1	1
14	212-5013P1	BUSS BAR, IPM / CAP, LEFT	1	1
15	212-5012P1	BUSS BAR, IPM / CAP, RIGHT	1	1
16	784-12-25200011	NUT, HEX KEPS #1/4-20	5	5
17	642-0080P2	BRACKET, CAPACITOR MOUNTING	2	2
18	751-02-25205011	SCREW, HHMS, #1/4-20 x 1/2" LG.	3	3
19	201-5161P1	BRACKET, TRANSFORMER	1	1
20	636-5042P1	TRANSFORMER, 1 PH LINE MATCH	1	1
21	641-5037P1	BLOCK, 3-POLE PWR/GRD DISTRIBUTION	2	2
22	603-5016P1	RESISTOR, 10 OHM, 100W	1	1
23	203-5203P1	COVER, TERMINAL BLOCK	1	1
24	642-5040P1	BRACKET, RESISTOR MOUNTING	2	2
25	212-5007P1	BUSS BAR, MIDDLE DIODE PACK	2	2
26	751-00-25207611	SCREW, HHMS #1/4-20 x 3/4" LG.	2	2
27	784-12-19100011	NUT, #10-32 HEX KEPS	10	10
28	760-22-14206311	SCREW, PPNHMS SEMS #6-32 x 5/8" LG.	4	4
29	784-12-14200011	NUT, #6-32 HEX KEPS	14	14
30	760-22-14203811	SCREW, PPNHMS SEMS #6-32 x 3/8" LG.	10	10
31	760-22-14203111	SCREW, PPNHMS SEMS #6-32 x 5/16" LG.	21	21
32	760-22-19102511	SCREW, PPNHMS SEMS #10-32 x 1/4" LG.	19	19
33	408-5251P1	LABEL, TB-1, 1PH	1	1
34	4455-0607	CONNECTOR, 3/8" CABLE	1	1
35	4455-0606	CABLE FITTING, 1"	2	2
36	407-5045P1	MOUNT, CABLE TIE	1	1
37	408-5039P1	LABEL, EARTH GROUND	1	1
38	407-5003P43	BUSHING SNAP, 1 1/2" (HEYCO #2240)	3	3
39	407-5003P39	BUSHING SNAP, 1 1/4" (HEYCO #2198)	3	3
40	126-5294G1	ASM, FILAMENT CABLE, 6 FT.	1	1
41	126-5290G1	ASM, CABLE, PRIMARY (P1, P2)	1	1
42	126-5293G1	LEAD DATA CABLE	1	1
43	126-5295G1	ASM, CABLE, POWER MODULE, 1PH	2	2
44	126-0177G2	ASM, KV & MA FEEDBACK CABLE	1	1
45	126-5297G1	ASM, FLAT SHIELDED CABLE	1	1
46	126-5299G1	ASM, IPM DRIVER BOARD CABLE	1	1
47	126-5296G1	CABLE, FLAT RIBBON	4	4
48	407-5003P44	BUSHING SNAP, 1 3/4" (HEYCO #2300)	1	1
49	760-22-16203811	SCREW, PPNHMS SEMS #8-32 x 3/8" LG.	5	5
50	408-5243P1	LABEL, SERIAL, POWER MODULE, 1PH	1	-
51	100012P6	SCREW, #6-32 x 5/16 LG. TRIM	8	8
52	203-5135P1	COVER, POWER MODULE	1	1
53	203-5194P1	BRACKET, CABLE ENTRANCE	1	1
54	202-0193P2	TROUGH, WIRE	1	1
55	112-5235G1	DOOR RESTRAINT	2	2
56	407-5003P32	BUSHING SNAP, 5/8" (HEYCO #2123)	9	9
57	785-11-19000011	WASHER, #10 FLAT NARROW	4	4
58	784-50-19000020	WASHER, #10 STANDARD SPLIT LOCK	4	4
59	753-40-19105010	SCREW, SHCS #10-32 x 1/2" LG.	4	4
60	785-13-38000011	WASHER, 3/8 FLAT	2	2
61	786-50-38000011	WASHER, 3/8 STANDARD SPLIT LOCK	2	2
62	784-10-38200011	NUT, #3/8-16 HEX	1	1
63	751-00-38250011	SCREW, #3/8-16 x 1/2" LG. HHMS	1	1
64	408-5039P3	LABEL, ATTENTION	1	1
65	408-5039P2	LABEL, DANGEROUS WARNING	1	1
66	786-50-25000011	WASHER, 1/4 STANDARD SPLIT LOCK	6	6
67	112-5471G3	ASM, POWER MODULE DOOR (AEC)	-	1
68	112-5469G2	ASM, BASE, POWER MODULE (AEC)	-	1
69	408-5243P3	LABEL, SERIAL, PWR MODULE, 1PH (AEC)	-	1
70				

G1 1 PHASE POWER MODULE ASSEMBLY

G3 1 PHASE POWER MODULE ASSEMBLY (AEC)

NOTES:

1. SEE 126-5293G1 FOR WIRING DIAGRAM.
2. SCREWS ARE SUPPLIED WITH DIODE PACKS.
3. NUT AND FLAT WASHER SUPPLIED WITH CAPACITOR.

REV	INITIAL	DATE	ECN NO.	CHANGE DESCRIPTION
3	BJ	4/7/10	041001	ADDED 110–5115G3 (AEC)

MADE BY Bill j DATE 4/7/10

COMP. FILE NO. 110–5115S1R3

APPROVED BY

DEL MEDICAL
ROSELLE, ILLINOIS

110–5115
SHT NO. 1 CONT ON SHT 2

UNLESS OTHERWISE SPECIFIED				DRG	TITLE ASM, POWER MODULE, 1PH, IN-TABLE	110-5115
SURF.	TOLERANCES ON DIMENSIONS			D	FIRST MADE FOR	SCALE:
✓	XX DEG. ± .015	XXX DEG. ± .005	ANGLES ± 1/2°	SIZE		SHT NO. 2 CONT ON SHT —

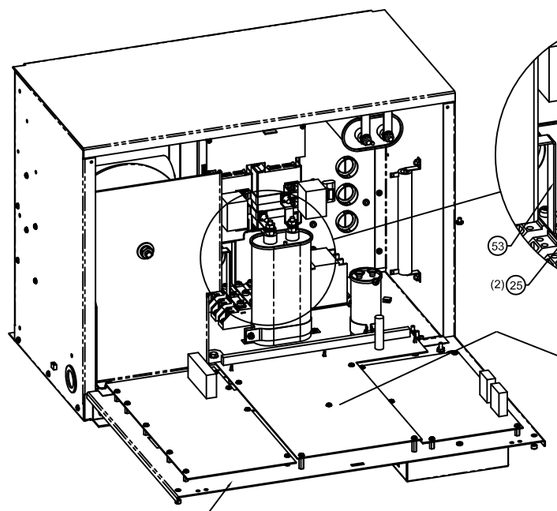

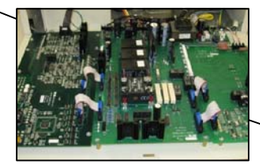

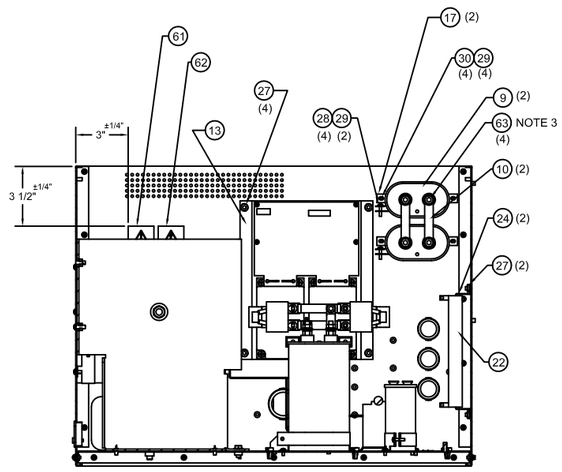

SECTION A - A

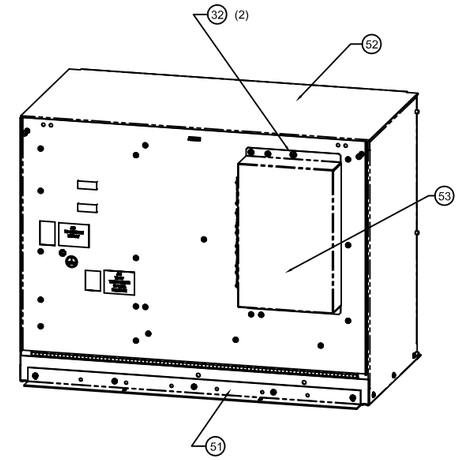

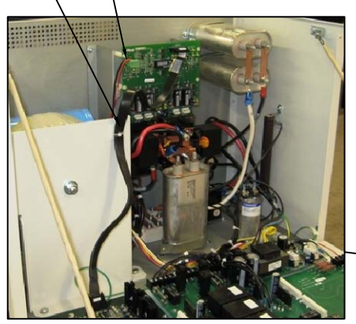

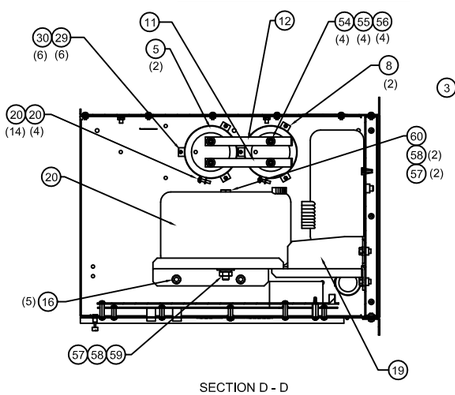

SECTION D - D

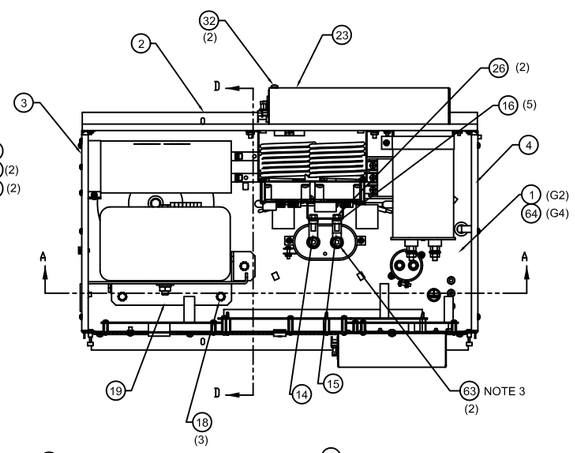

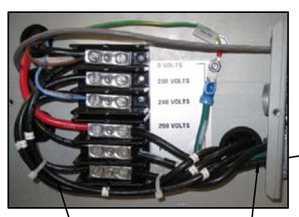

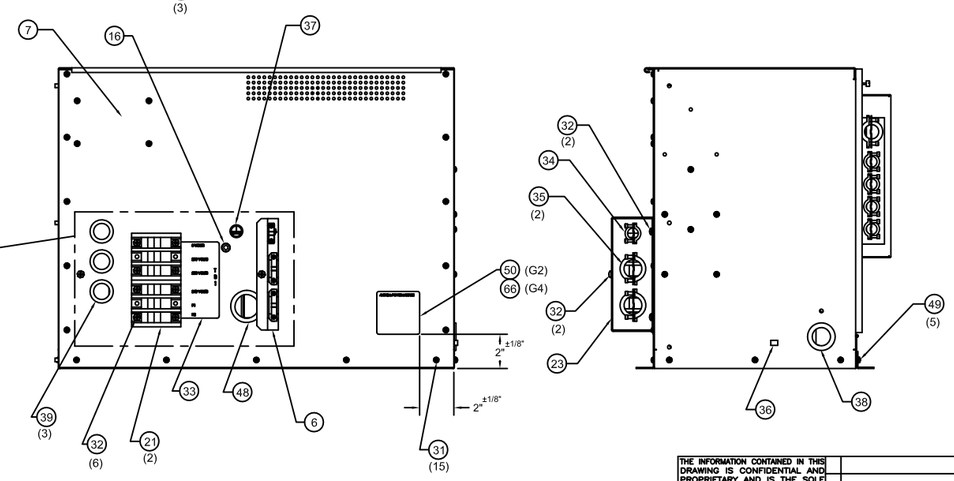

ITEM NO.	PART NUMBER	DESCRIPTION	QTY. G2	QTY. G4
1	112-5469G1	ASM, BASE, POWER MODULE	1	-
2	203-5204P1	PANEL, BACK	1	1
3	210-5084P1	PANEL, LEFT SIDE	1	1
4	210-5085P1	PANEL, RIGHT SIDE	1	1
5	611-0029P6	CAPACITOR, 450VDC, 3900UF	2	2
6	203-5202P1	BRKT, TERM. BLOCK COVER	1	1
7	112-5471G2	ASM, POWER MODULE DOOR	1	-
8	642-0021P1	CLAMP, CAPACITOR	2	2
9	4610-0019P2	CAPACITOR	2	2
10	212-5014P1	BUSS BAR, CAPACITOR	2	2
11	212-5008P1	BUSS BAR, CAPACITOR, FRONT	1	1
12	212-5009P1	BUSS BAR, CAPACITOR, REAR	1	1
13	112-5472G1	ASM, INVERTER, POWER MODULE	1	1
14	212-5013P1	BUSS BAR, IPM / CAP, LEFT	1	1
15	212-5012P1	BUSS BAR, IPM / CAP, RIGHT	1	1
16	784-12-25200011	NUT, HEX KEPS #1/4-20	5	5
17	642-0080P2	BRACKET, CAPACITOR MOUNTING	2	2
18	751-02-25205011	SCREW, HHMS, #1/4-20 x 1/2" LG.	3	3
19	201-5161P1	BRACKET, TRANSFORMER	1	1
20	636-5042P1	TRANSFORMER, 1 PH LINE MATCH	1	1
21	641-5037P1	BLOCK, 3-POLE PWR/GRD DISTRIBUTION	2	2
22	603-5016P1	RESISTOR, 10 OHM, 100W	1	1
23	203-5203P1	COVER, TERMINAL BLOCK	1	1
24	642-5040P1	BRACKET, RESISTOR MOUNTING	2	2
25	212-5007P1	BUSS BAR, MIDDLE DIODE PACK	2	2
26	751-00-25207511	SCREW, HHMS #1/4-20 x 3/4" LG.	2	2
27	784-12-19100011	NUT, #10-32 HEX KEPS	6	6
28	760-22-14206311	SCREW, PPNHMS SEMS #6-32 x 5/8" LG.	4	4
29	784-12-14200011	NUT, #6-32 HEX KEPS	14	14
30	760-22-14203811	SCREW, PPNHMS SEMS #6-32 x 3/8" LG.	10	10
31	760-22-14203111	SCREW, PPNHMS SEMS #6-32 x 5/16" LG.	21	21
32	760-22-19102511	SCREW, PPNHMS SEMS #10-32 x 1/4" LG.	14	14
33	408-5251P1	LABEL, TB-1, 1PH	1	1
34	4455-0607	CONNECTOR, 3/8" CABLE	1	1
35	4455-0606	CABLE FITTING, 1"	2	2
36	407-5045P1	MOUNT, CABLE TIE	1	1
37	408-5039P1	LABEL, EARTH GROUND	1	1
38	407-5003P43	BUSHING SNAP, 1 1/2" (HEYCO #2240)	1	1
39	407-5003P39	BUSHING SNAP, 1 1/4" (HEYCO #2198)	3	3
40	126-5294G1	ASM, FILAMENT CABLE, 6 FT.	1	1
41	126-5290G1	ASM, CABLE, PRIMARY (P1, P2)	1	1
42	126-5293G1	LEAD DATA CABLE	1	1
43	126-5295G1	ASM, CABLE, POWER MODULE, 1PH	1	1
44	126-0177G2	ASM, KV & MA FEEDBACK CABLE	1	1
45	126-5297G1	ASM, FLAT SHIELDED CABLE	1	1
46	126-5299G1	ASM, IPM DRIVER BOARD CABLE	1	1
47	126-5296P1	CABLE, FLAT RIBBON	4	4
48	407-5003P44	BUSHING SNAP, 1 3/4" (HEYCO #2300)	1	1
49	760-22-16203811	SCREW, PPNHMS SEMS #8-32 x 3/8" LG.	5	5
50	408-5243P2	LABEL, SERIAL, POWER MODULE, 1PH, IN-TABLE	1	-
51	202-0173P2	MOUNTING BRACKET	1	1
52	114-0246G2	WELDMENT, LID	1	1
53	205-0013P2	COVER, TERMINAL STRIP	1	1
54	785-11-19000011	WASHER, FLAT #10 NARROW	4	4
55	786-50-19000020	WASHER, SPLIT LOCK STD #10	4	4
56	753-40-19105010	SCREW, SHCS 10-32 x 1/2	4	4
57	785-13-38000011	WASHER, 3/8 FLAT	2	2
58	786-50-38000011	WASHER, 3/8 STANDARD SPLIT LOCK	2	2
59	784-10-38200011	NUT, 3/8-16 HEX	1	1
60	751-00-38250011	SCREW, HHMS 3/8-16 x 5,0 LG.	1	1
61	408-5039P3	LABEL, ATTENTION	1	1
62	408-5039P2	LABEL, DANGEROUS WARNING	1	1
63	786-50-25000011	WASHER, SPLIT LOCK STD 1/4	6	6
64	112-5469G2	ASM, BASE, POWER MODULE (AEC)	-	1
65	112-5471G4	ASM, POWER MODULE DOOR (AEC)	-	1
66	408-5243P4	LABEL, SERIAL, PWR MODULE, 1PH, IN-TABLE (AEC)	-	1
67				
68				
69				
70				

G2 1 PHASE POWER MODULE IN-TABLE ASSEMBLY.

G4 1 PHASE POWER MODULE IN-TABLE ASSEMBLY (AEC).

NOTES:

1. FOR WIRING DIAGRAM SEE #126-5293G1.
2. SCREWS ARE SUPPLIED WITH DIODE PACKS.
3. NUT AND FLAT WASHER SUPPLIED WITH CAPACITOR.

REV	INITIAL	DATE	ECN NO.	CHANGE DESCRIPTION
3	BJ	4/12/10	041001	ADDED 110-5115G4

MADE BY Bill j DATE 4/12/10

COMP. FILE NO. 110-5115S2R3

APPROVED BY

DEL MEDICAL
ROSELLE, ILLINOIS

110-5115
SHT NO. 2 CONT ON SHT —

UNLESS OTHERWISE SPECIFIED				DRG	TITLE ASM, POWER MODULE, 3 PHASE	110–5116
SURF.	TOLERANCES ON DIMENSIONS			D	FIRST MADE FOR	SCALE:
	XX DEC. ± .015	XXX DEC. ± .005	ANGLES ± 1/2°	SIZE		SHT NO. 1 CONT ON SHT 2

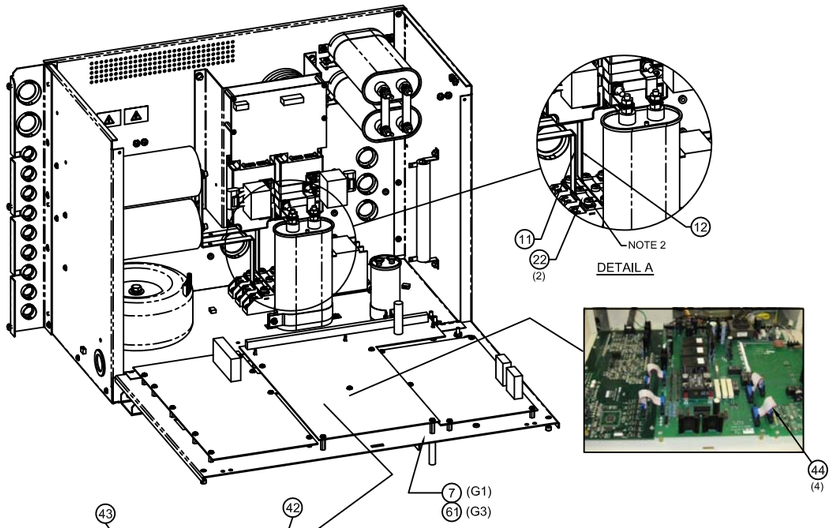

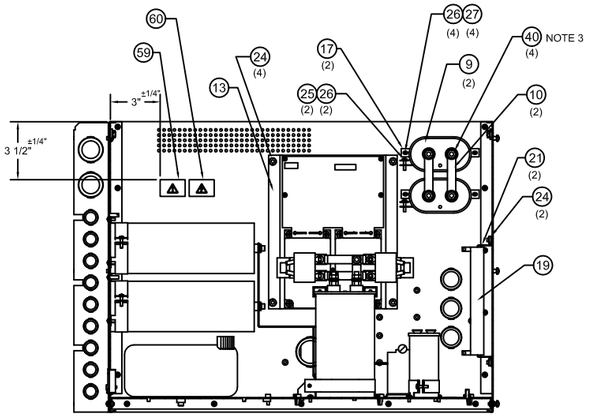

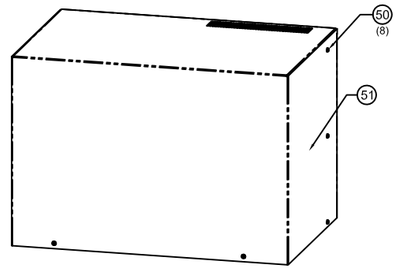

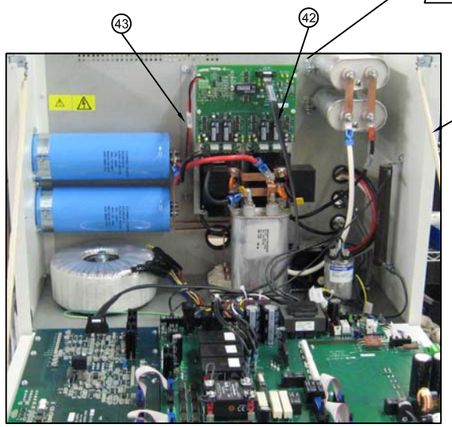

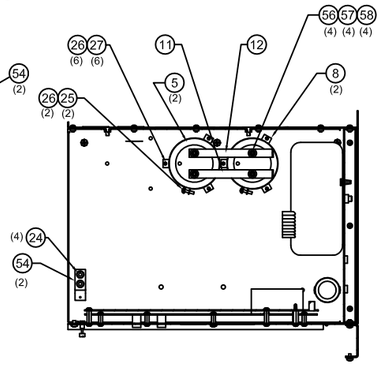

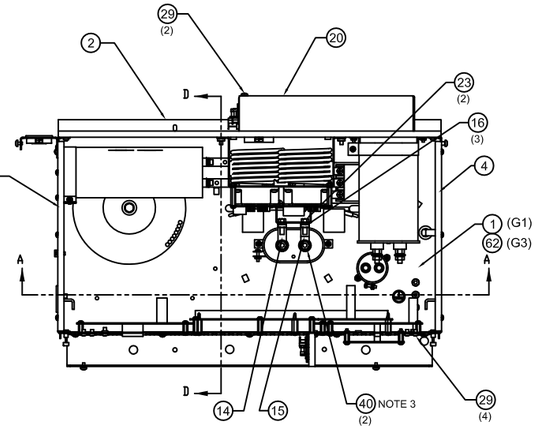

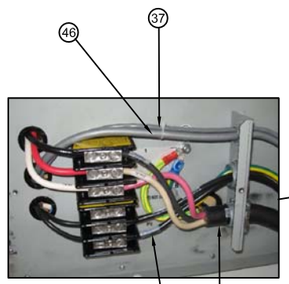

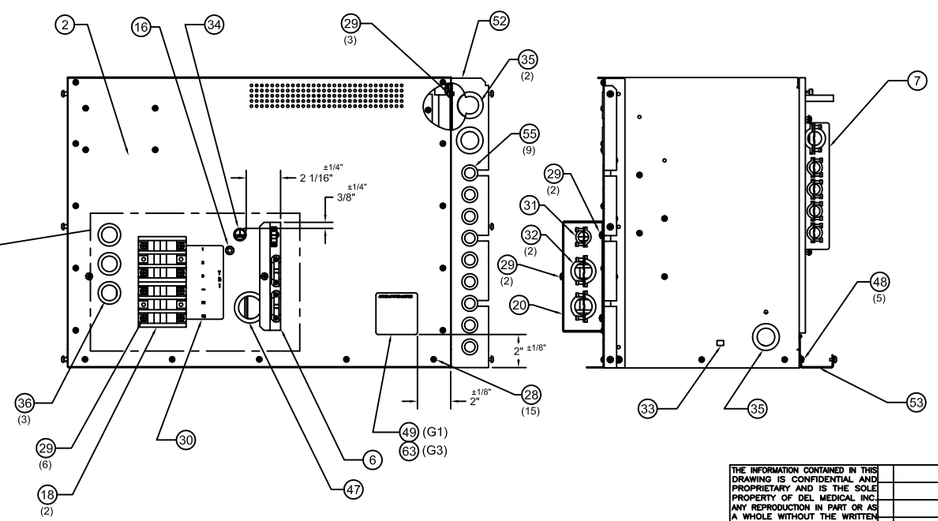

ITEM NO.	PART NUMBER	DESCRIPTION	QTY. G1	QTY. G3
1	112-5469G1	ASM, BASE, POWER MODULE	1	-
2	203-5204P1	PANEL, BACK	1	1
3	210-5084P1	PANEL, LEFT SIDE	1	1
4	210-5085P1	PANEL, RIGHT SIDE	1	1
5	611-0029P6	CAPACITOR, 450VDC, 3900UF	2	2
6	203-5202P1	BRKT, TERM. BLOCK COVER	1	1
7	112-5471G1	ASM, POWER MODULE DOOR	1	-
8	642-0021P1	CLAMP, CAPACITOR	2	2
9	610-0019P2	CAPACITOR	2	2
10	212-5014P1	BUSS BAR, CAPACITOR	2	2
11	212-5008P1	BUSS BAR, CAPACITOR, FRONT	1	1
12	212-5009P1	BUSS BAR, CAPACITOR, REAR	1	1
13	112-5472G1	ASM, INVERTER, POWER MODULE	1	1
14	212-5013P1	BUSS BAR, IPM / CAP, LEFT	1	1
15	212-5012P1	BUSS BAR, IPM / CAP, RIGHT	1	1
16	784-12-25200011	NUT, HEX KEPS #1/4-20	3	3
17	642-0080P2	BRACKET, CAPACITOR MOUNTING	2	2
18	641-5037P1	BLOCK, PWR/GRD, DIST, 3-POLE	2	2
19	603-5016P1	RESISTOR, 10 OHM, 100 W	1	1
20	203-5203P1	COVER, TERMINAL BLOCK	1	1
21	642-5040P1	BRKT, RESISTOR MOUNTING	2	2
22	212-5007P1	BUSS BAR, DIODE PACK, MIDDLE	2	2
23	751-00-25207511	SCREW, HHMS #1/4-20 x 3/4" LG.	2	2
24	784-12-19100011	NUT, #10-32 HEX KEPS	10	10
25	760-22-14206311	SCREW, PPNHMS SEMS #6-32 x 5/8" LG.	4	4
26	784-12-14200011	NUT, #6-32 HEX KEPS	14	14
27	760-22-14203811	SCREW, PPNHMS SEMS #6-32 x 3/8" LG.	10	10
28	760-22-14203111	SCREW, PPNHMS SEMS #6-32 x 5/16" LG.	21	21
29	760-22-19102511	SCREW, PPNHMS SEMS #10-32 x 1/4" LG.	19	19
30	408-5252P1	LABEL, TB-1, 3 PHASE	1	1
31	4455-0607	CONNECTOR, 3/8" CABLE	1	1
32	4455-0606	CABLE FITTING, 1"	2	2
33	407-5045P1	MOUNT, CABLE TIE	1	1
34	408-5039P1	LABEL, EARTH GROUND	1	1
35	407-5003P43	BUSHING, SNAP, 1 1/2" (HEYCO #2240)	3	3
36	407-5003P39	BUSHING, SNAP, 1 1/4" (HEYCO #2198)	3	3
37	126-5294G1	ASM, FILAMENT CABLE, 6 FT.	1	1
38	126-5290G1	ASM, CABLE, PRIMARY (P1, P2)	1	1
39	126-5293G1	LEAD DATA CABLE	1	1
40	786-50-25000011	WASHER, SPLIT LOCK STD. 1/4	6	6
41	126-0177G2	ASM, KV & MA FEEDBACK CABLE	1	1
42	126-5297G1	ASM, FLAT SHIELDED CABLE	1	1
43	126-5299G1	ASM, IPM DRIVER BD. CABLE	1	1
44	126-5296P1	CABLE, FLAT RIBBON	4	4
45	126-5291G1	ASM, CABLE, POWER MODULE, 3PH, 4FT.	1	1
46	126-5292G1	ASM, CABLE, POWER MODULE, 3PH, 6FT.	1	1
47	407-5003P44	BUSHING, SNAP, 1 3/4" (HEYCO #2300)	1	1
48	760-22-16203811	SCREW, PPNHMS SEMS #8-32 x 3/8" LG.	5	5
49	408-5244P1	LABEL SERIAL, POWER MODULE, 3 PH	1	-
50	100012P6	SCREW, #6-32 x 5/16" LG. TRIM	8	8
51	203-5135P1	COVER, POWER MODULE	1	1
52	203-5194P1	BRACKET, CABLE ENTRANCE	1	1
53	202-0193P2	TROUGH, WIRE	1	1
54	112-5235G1	DOOR RESTRAINT	2	2
55	407-5003P32	BUSHING, SNAP, 5/8" (HEYCO #2123)	9	9
56	785-11-19000011	WASHER, #10 FLAT NARROW	4	4
57	784-50-19000020	WASHER, #10 STD. SPLIT LOCK	4	4
58	753-40-19105010	SCREW, SHCS #10-32 x 1/2 LG.	4	4
59	408-5039P3	LABEL, ATTENTION	1	1
60	408-5039P2	LABEL, DANGEROUS WARNING	1	1
61	112-5471G3	ASM, POWER MODULE DOOR (AEC)	-	1
62	112-5469G2	ASM, BASE, POWER MODULE (AEC)	-	1
63	408-5244P3	LABEL, 3 PHASE POWER MODULE SERIAL	-	1
64				
65				
66				
67				
68				
69				
70				

(G1) 3 PHASE POWER MODULE ASSEMBLY

(G3) 3 PHASE POWER MODULE ASSEMBLY (AEC)

NOTES:

1. FOR WIRING DIAGRAM SEE #126-5293G1.
2. SCREWS ARE SUPPLIED WITH DIODE PACKS.
3. NUT AND WASHER SUPPLIED WITH CAPACITOR.

REV	INITIAL	DATE	ECN NO.	CHANGE DESCRIPTION
3	BJ	4/12/10	–	ADDED 110–5116G3

MADE BY Bill j DATE 4/12/10

COMP. FILE NO. 110–5116S1R3

APPROVED BY

DEL MEDICAL
ROSELLE, ILLINOIS

110–5116
SHT NO. 1 CONT ON SHT 2

UNLESS OTHERWISE SPECIFIED				DRG	TITLE ASM, PWR MODULE, 3PH, IN-TABLE	110-5116
SURF.	TOLERANCES ON DIMENSIONS			D	FIRST MADE FOR	SCALE:
	.XX DEC. ± .015	.XXX DEC. ± .005	ANGLES ± 1/2°	SIZE		SHT NO. 2 CONT ON SHT —

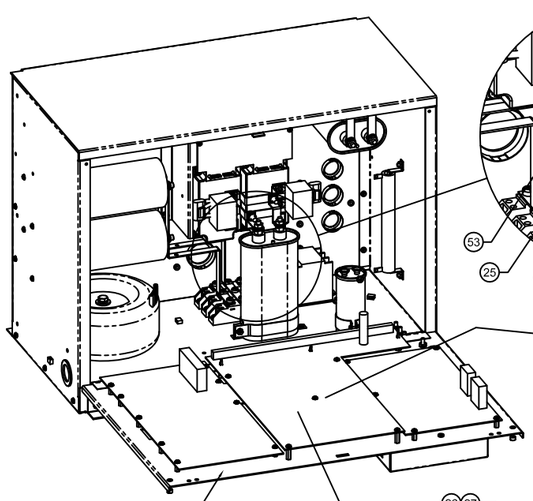

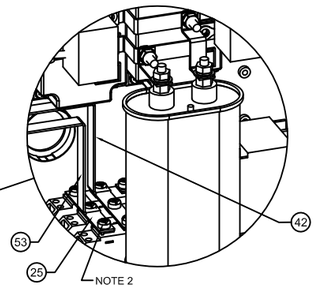

DETAIL A

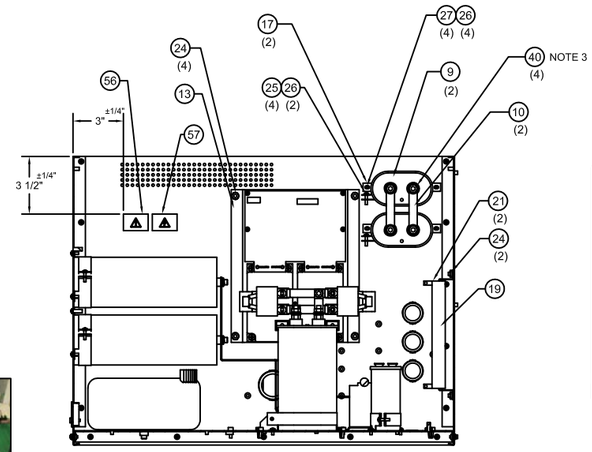

SECTION A - A

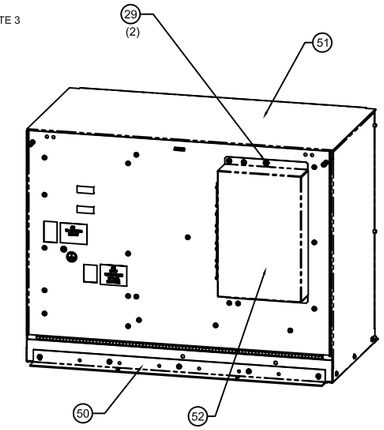

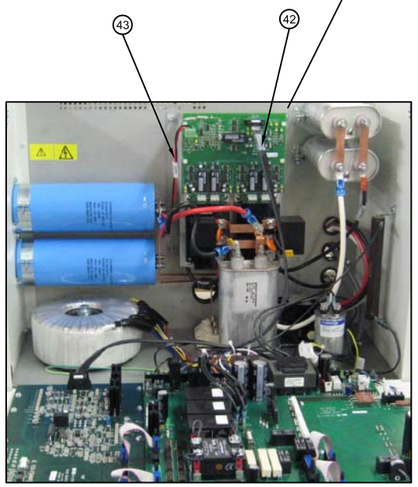

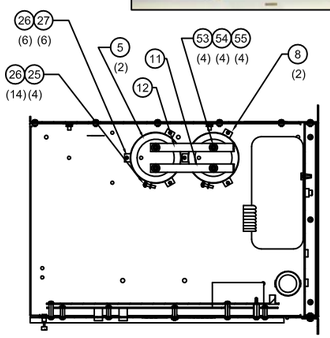

SECTION D - D

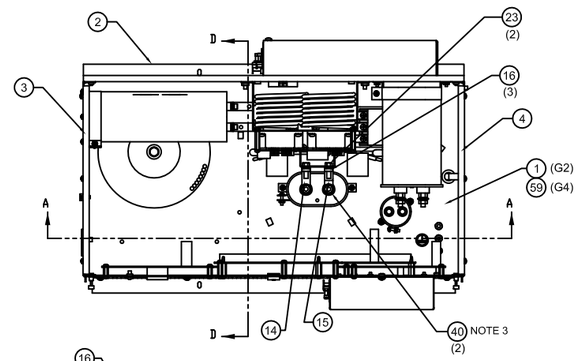

NOTES:

1. FOR WIRING DIAGRAM SEE #126-5293G1.
2. SCREWS ARE SUPPLIED WITH DIODE PACKS.
3. NUT AND WASHER SUPPLIED WITH CAPACITOR.

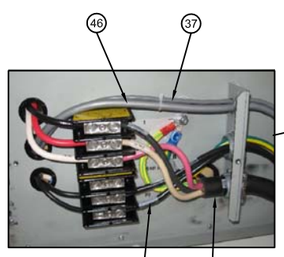

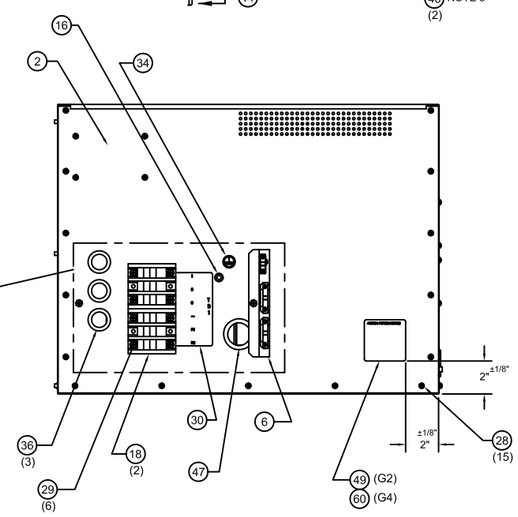

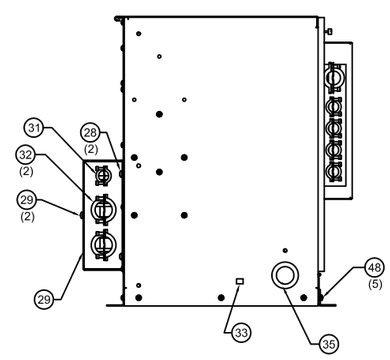

ITEM NO.	PART NUMBER	DESCRIPTION	QTY. G2	QTY. G4
1	112-5469G1	ASM, BASE, POWER MODULE	1	-
2	203-5204P1	PANEL, BACK	1	1
3	210-5084P1	PANEL, LEFT SIDE	1	1
4	210-5085P1	PANEL, RIGHT SIDE	1	1
5	611-0029P6	CAPACITOR, 450VDC, 3900UF	2	2
6	203-5202P1	BRKT, TERM. BLOCK COVER	1	1
7	112-5471G2	ASM, POWER MODULE DOOR	1	-
8	642-0021P1	CLAMP, CAPACITOR	2	2
9	610-0019P2	CAPACITOR	2	2
10	212-5014P1	BUSS BAR, CAPACITOR	2	2
11	212-5008P1	BUSS BAR, CAPACITOR, FRONT	1	1
12	212-5009P1	BUSS BAR, CAPACITOR, REAR	1	1
13	112-5472G1	ASM, INVERTER, POWER MODULE	1	1
14	212-5013P1	BUSS BAR, IPM / CAP, LEFT	1	1
15	212-5012P1	BUSS BAR, IPM / CAP, RIGHT	1	1
16	784-12-25200011	NUT, HEX KEPS #1/4-20	3	3
17	642-0080P2	BRACKET, CAPACITOR MOUNTING	2	2
18	641-5037P1	BLOCK, PWR/GRD, DIST, 3-POLE	2	2
19	603-5016P1	RESISTOR, 10 OHM, 100 W	1	1
20	203-5203P1	COVER, TERMINAL BLOCK	1	1
21	642-5040P1	BRKT, RESISTOR MOUNTING	2	2
22	212-5007P1	BUSS BAR, DIODE PACK, MIDDLE	2	2
23	751-00-25207511	SCREW, HHMS #1/4-20 x 3/4" LG.	2	2
24	784-12-19100011	NUT, #10-32 HEX KEPS	6	6
25	760-22-14206311	SCREW, PPNHMS SEMS #6-32 x 5/8" LG.	4	4
26	784-12-14200011	NUT, #6-32 HEX KEPS	14	14
27	760-22-14203811	SCREW, PPNHMS SEMS #6-32 x 3/8" LG.	10	10
28	760-22-14203111	SCREW, PPNHMS SEMS #6-32 x 5/16" LG.	21	21
29	760-22-19102511	SCREW, PPNHMS SEMS #10-32 x 1/4" LG.	14	14
30	408-5252P1	LABEL, TB-1, 3 PHASE	1	1
31	4455-0607	CONNECTOR, 3/8" CABLE	1	1
32	4455-0606	CABLE FITTING, 1"	2	2
33	407-5045P1	MOUNT, CABLE TIE	1	1
34	408-5039P1	LABEL, EARTH GROUND	1	1
35	407-5003P43	BUSHING, SNAP, 1 1/2" (HEYCO #2240)	1	1
36	407-5003P39	BUSHING, SNAP, 1 1/4" (HEYCO #2198)	3	3
37	126-5294G1	ASM, FILAMENT CABLE, 6 FT.	1	1
38	126-5290G1	ASM, CABLE, PRIMARY (P1, P2)	1	1
39	126-5293G1	LEAD DATA CABLE	1	1
40	786-50-25000011	WASHER, SPLIT LOCK STD. 1/4	6	6
41	126-0177G2	ASM, KV & MA FEEDBACK CABLE	1	1
42	126-5297G1	ASM, FLAT SHIELDED CABLE	1	1
43	126-5299G1	ASM, IPM DRIVER BD. CABLE	1	1
44	126-5296P1	CABLE, FLAT RIBBON	4	4
45	126-5291G2	ASM, CABLE, POWER MODULE, 3PH, 10FT.	1	1
46	126-5292G2	ASM, CABLE, POWER MODULE, 3PH, 12FT.	1	1
47	407-5003P44	BUSHING, SNAP, 1 3/4" (HEYCO #2300)	1	1
48	760-22-16203811	SCREW, PPNHMS SEMS #8-32 x 3/8" LG.	5	5
49	408-5244P2	LABEL SERIAL, POWER MODULE, 3 PH	1	-
50	202-0173P2	MOUNTING BRACKET	1	1
51	114-0246G2	WELDMENT, LID	1	1
52	205-0013P2	COVER, TERMINAL STRIP	1	1
53	785-11-19000011	WASHER, #10 NARROW FLAT	4	4
54	786-50-19000020	WASHER, #10 STD. SPLIT LOCK	4	4
55	753-40-19105010	SCREW, SHCS #10-32 x 1/2	4	4
56	408-5039P3	LABEL, ATTENTION	1	1
57	408-5039P2	LABEL, DANGEROUS WARNING	1	1
58	112-5471G3	ASM, POWER MODULE DOOR (AEC)	-	1
59	112-5469G2	ASM, BASE, POWER MODULE (AEC)	-	1
60	408-5244P4	LABEL, 3 PHASE POWER MODULE SERIAL	-	1
61				
62				
63				
64				
65				
66				
67				
68				
69				
70				

G2 3 PHASE IN-TABLE POWER MODULE ASSEMBLY

G4 3 PHASE IN-TABLE POWER MODULE ASSEMBLY (AEC)

REV	INITIAL	DATE	ECN NO.	CHANGE DESCRIPTION
3	BJ	4/13/10	–	ADDED 110-5116G4

MADE BY Bill j DATE 4/13/10

COMP. FILE NO. 110-5116S1R3

APPROVED BY

DEL MEDICAL
ROSELLE, ILLINOIS

110-5116
SHT NO. 2 CONT ON SHT —

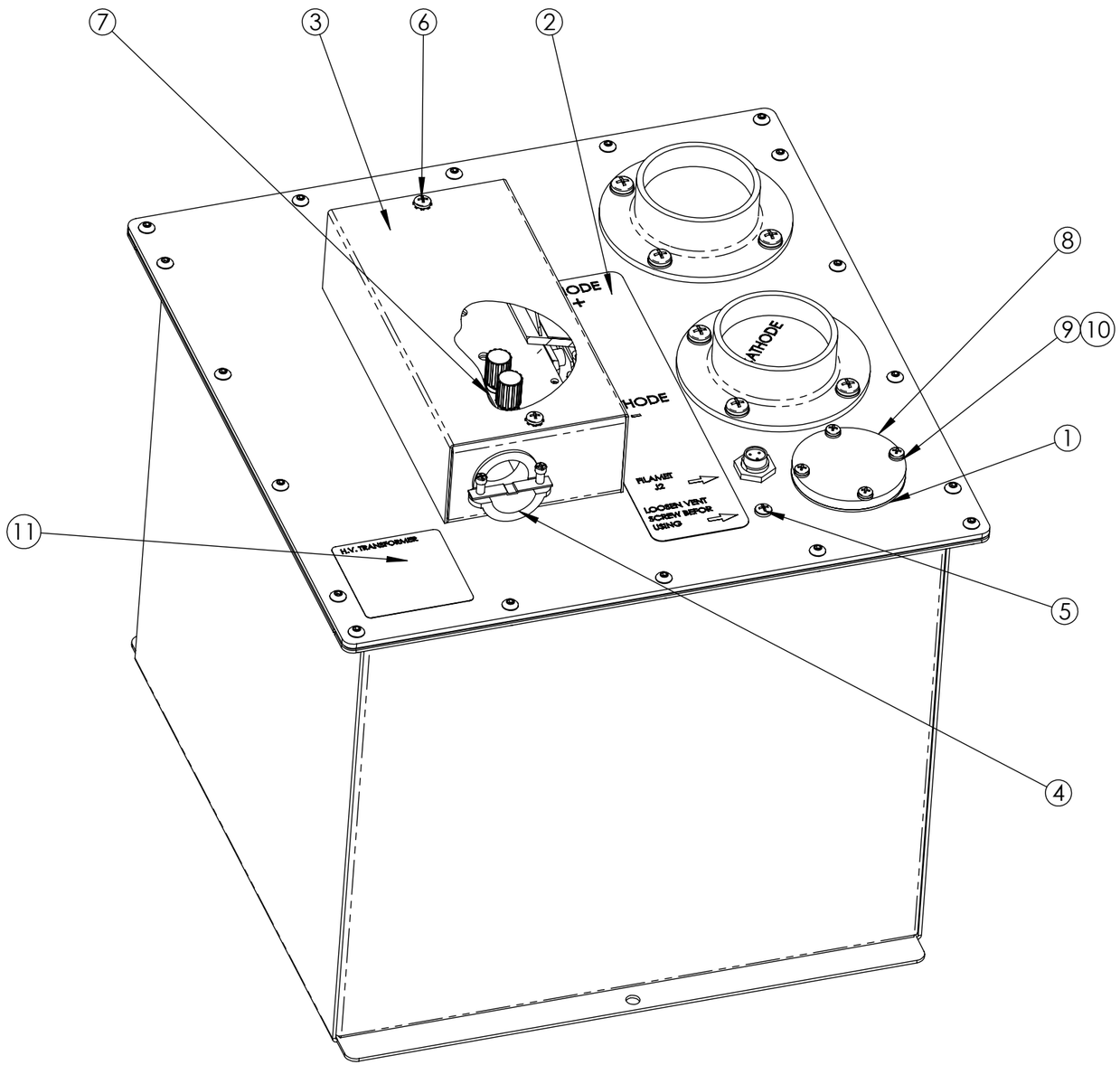

ITEM NO.	PART NUMBER	DESCRIPTION	QTY.
1	404-0034P1	GASKET	1
2	408-5236P1	LABEL, HV TANK	1
3	204-5041P1	COVER, INTERFACE BOARD	1
4	4455-0606	CABLE FITTING, 1"	2
5	422-0019P3	SEALING SCREW	1
6	760-22-19102511	SCREW, PPNHMS SEMS 10-32X1/4	2
7	212-5016P1	JUMPER, INTERFACE BOARD	1
8	214-0047P1	WINDOW	1
9	421-0006P2	WASHER, #8 SEALING	4
10	760-20-16205011	SCREW, PPNHMS 8-32 x 1/2	4
11	408-5246P1	LABEL, SERIAL, H.V. TRANSFORMER	1

ASSEMBLY, H.V. TANK
P/N #110-5105 REV. 1

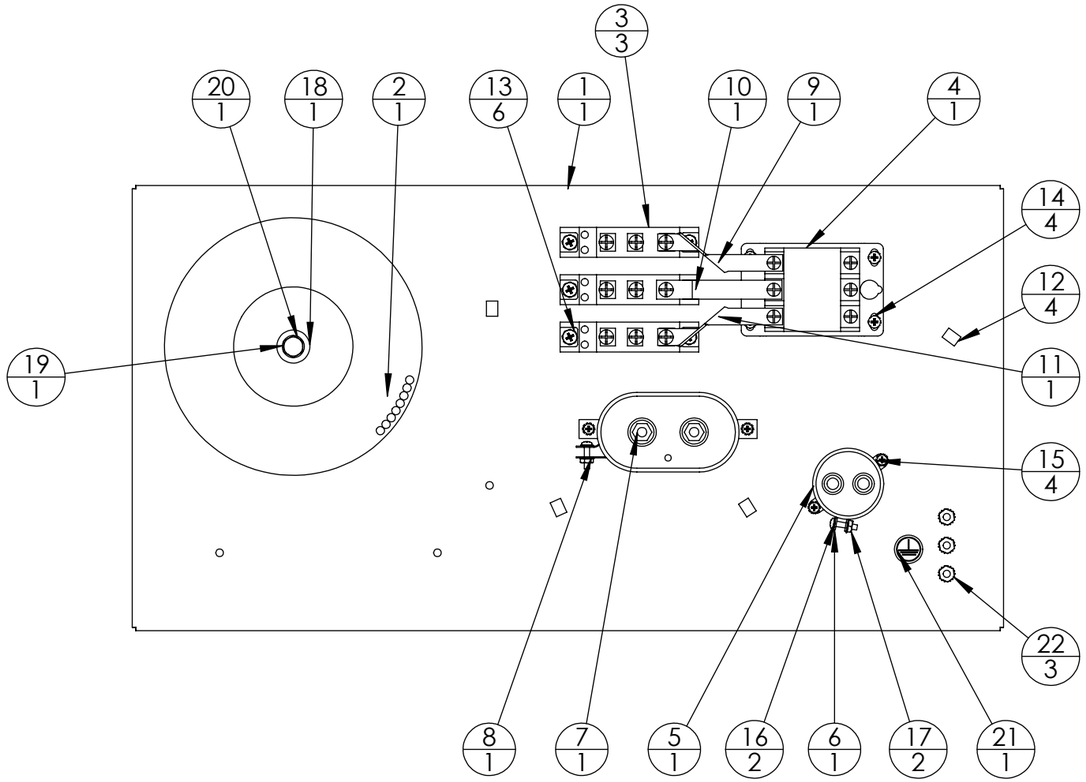

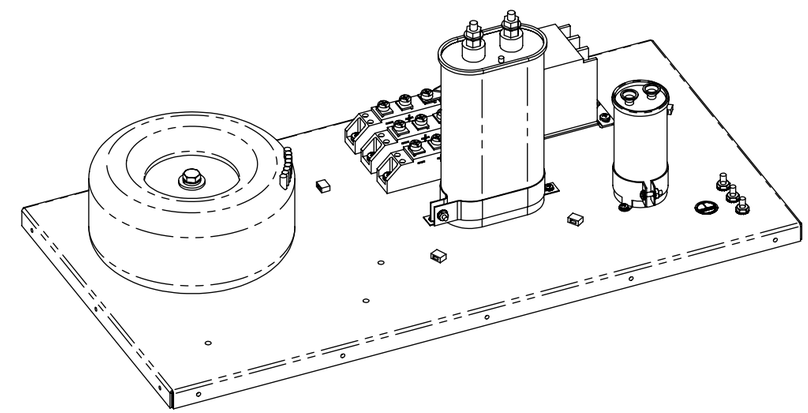

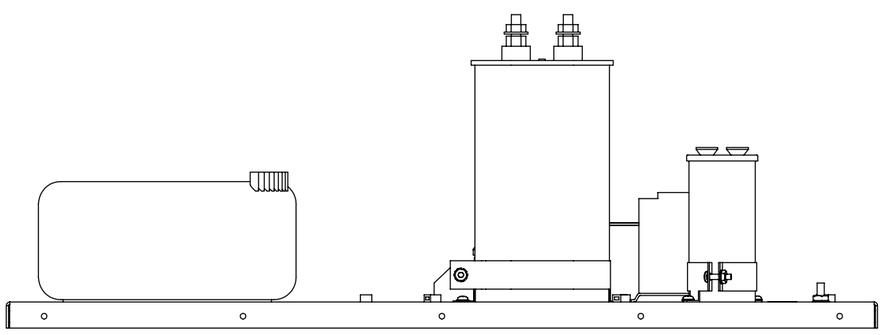

ITEM NO.	PART NUMBER	Description	QTY.
1	203-5193P1	CHASSIS, BOTTOM	1
2	636-5043P1	TRANSFORMER	1
3	621-0015P3	DIODE PACK	3
4	645-5032P1	CONTACTOR, 3-POLE	1
5	610-0022P1	CAPACITOR, 30MFD, 370V	1
6	642-0021P4	MOUNTING CLAMP	1
7	610-0019P2	CAPACITOR	1
8	642-0080P2	BRKT, CAP. MTG	1
9	212-5006P1	BUSS BAR, DIODE PACK, REAR	1
10	212-5010P1	BUSS BAR, DIODE PACK	1
11	212-5006P2	BUSS BAR, DIODE PACK, FRONT	1
12	407-5045P1	MOUNT, CABLE TIE	4
13	760-22-19105011	SCREW, PPNHMS SEMS 10-32 x 1/2	6
14	760-22-16203111	SCREW,PPNHMS SEMS 8-32X.312	4
15	760-22-14203111	SCREW, PPNHMS SEMS 6-32x5/16	4
16	760-22-14206311	SCREW, PPNHMS SEMS 6-32x5/8	2
17	784-12-14200011	NUT,HEX KEPS 6-32	2
18	785-13-31000011	WASHER,FLAT 5/16 WIDE	1
19	786-50-31000011	WASHER,SPLITLK-STD 5/16	1
20	751-00-31230011	SCREW,HHMS 5/16-18 X 3"	1
21	408-5039P1	LABEL, EARTH GROUND	1
22	784-12-19100011	NUT,HEX KEPS 10-32	3

ASSEMBLY, BASE, POWER MODULE
P/N #112-5469 REV. A

UNLESS OTHERWISE SPECIFIED				DRG	TITLE ASM, DOOR, POWER MODULE		112–5471
SURF.	TOLERANCES ON DIMENSIONS			B	FIRST MADE FOR	SCALE:	SHT NO. 1 CONT ON SHT —
	.XX DEC. ± .015	.XXX DEC. ± .005	ANGLES ± 1/2°	SIZE			

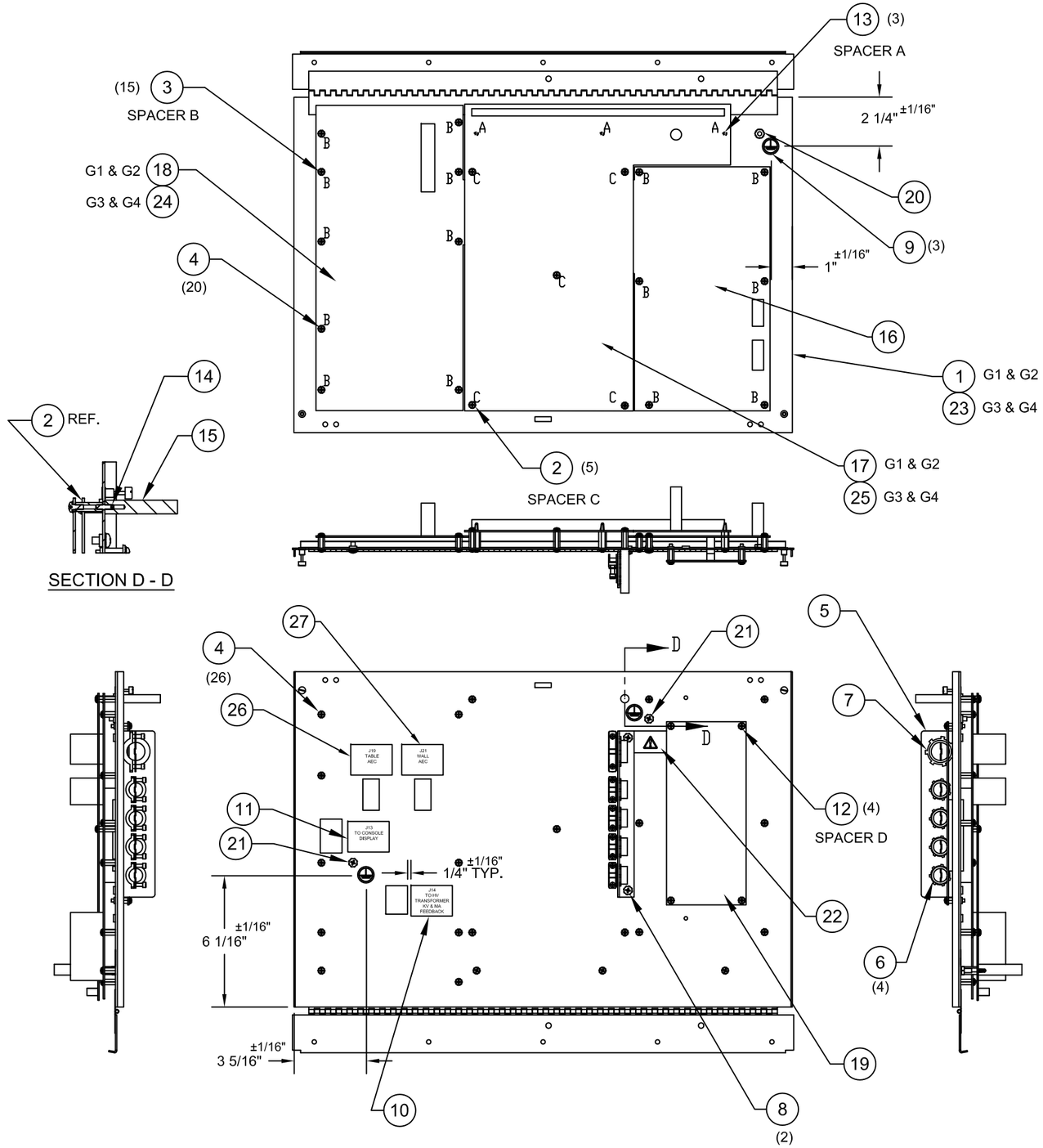

ITEM NO.	PART NUMBER	DESCRIPTION	QTY. G1	QTY. G2	QTY. G3	QTY. G4
1	114-5165G1	WELDMENT, FRONT DOOR	1	1	1	1
2	46-404731P8	SPACER, #6-32 x 3/4" LG. THREADED	5	5	5	5
3	46-404731P9	SPACER, #6-32 x 1/2" LG. THREADED	15	15	15	15
4	760-22-14203111	SCREW, PPNHMS SEMS #6-32 x 5/16" LG.	46	47	46	47
5	201-0264P2	MOUNTING BRACKET	1	1	1	1
6	4455-0607	CONNECTOR, 3/8" CABLE	4	4	4	4
7	642-0059P1	CONNECTOR, CABLE	1	1	1	1
8	760-22-19102511	SCREW, PPNHMS SEMS #10-32 x 1/4" LG.	2	2	2	2
9	408-5039P1	LABEL, EARTH GROUND	3	3	3	3
10	408-5253P2	LABEL, FRONT PANEL CONNECTOR (J14)	1	1	1	1
11	408-5253P1	LABEL, FRONT PANEL CONNECTOR (J13)	1	1	1	1
12	642-0018P10	STANDOFF, #6-32 x 9/16" MALE / FEMALE	4	4	4	4
13	407-5057P1	STANDOFF, 3/4" LG. PCB SCREW MOUNT	3	3	3	3
14	757-41-14205010	SCREW, #6-32 x 1/2" LG. SOCKET	1	-	1	-
15	240-0044P1	SPACER - COVER	1	-	1	-
16	124-5131G1	PCBA, FILAMENT	1	1	1	1
17	124-5136G1	PCBA, POWER RELAY	1	1	-	-
18	124-5132G1	PCBA, MAIN CONTROL	1	1	-	-
19	124-5134G1	PCBA, INTERFACE	1	1	1	1
20	784-12-19100011	NUT, #10-32 HEX KEPS	1	1	1	1
21	760-22-19103811	SCREW, #10-32 x 3/8" LG. PPNHMS SEMS	2	2	2	2
22	408-5039P3	LABEL, ATTENTION	1	1	1	1
23	114-5165G2	WELDMENT, FRONT DOOR (AEC)	-	-	1	1
24	124-5132G2	PCBA, MAIN CONTROL (AEC)	-	-	1	1
25	124-5136G2	PCBA, POWER / RELAY (AEC)	-	-	1	1
26	408-5253P3	LABEL, FRONT PANEL CONNECTOR (J19)	-	-	1	1
27	408-5253P4	LABEL, FRONT PANEL CONNECTOR (J21)	-	-	1	1
28						
29						
30						
31						

G1 ASM, POWER MODULE DOOR

G2 ASM, IN - TABLE POWER MODULE DOOR

G3 ASM, POWER MODULE DOOR (AEC)

G4 ASM, IN - TABLE POWER MODULE DOOR (AEC)

REV	INITIAL	DATE	ECN NO.	CHANGE DESCRIPTION
1	BJ	4/7/10	041001	ADDED G3 & G4 ASSEMBLIES

MADE BY Bill j DATE 4/7/10

COMP. FILE NO. 112–5471S1R1

APPROVED BY

DEL MEDICAL
ROSELLE, ILLINOIS

112–5471
SHT NO. 1 CONT ON SHT —

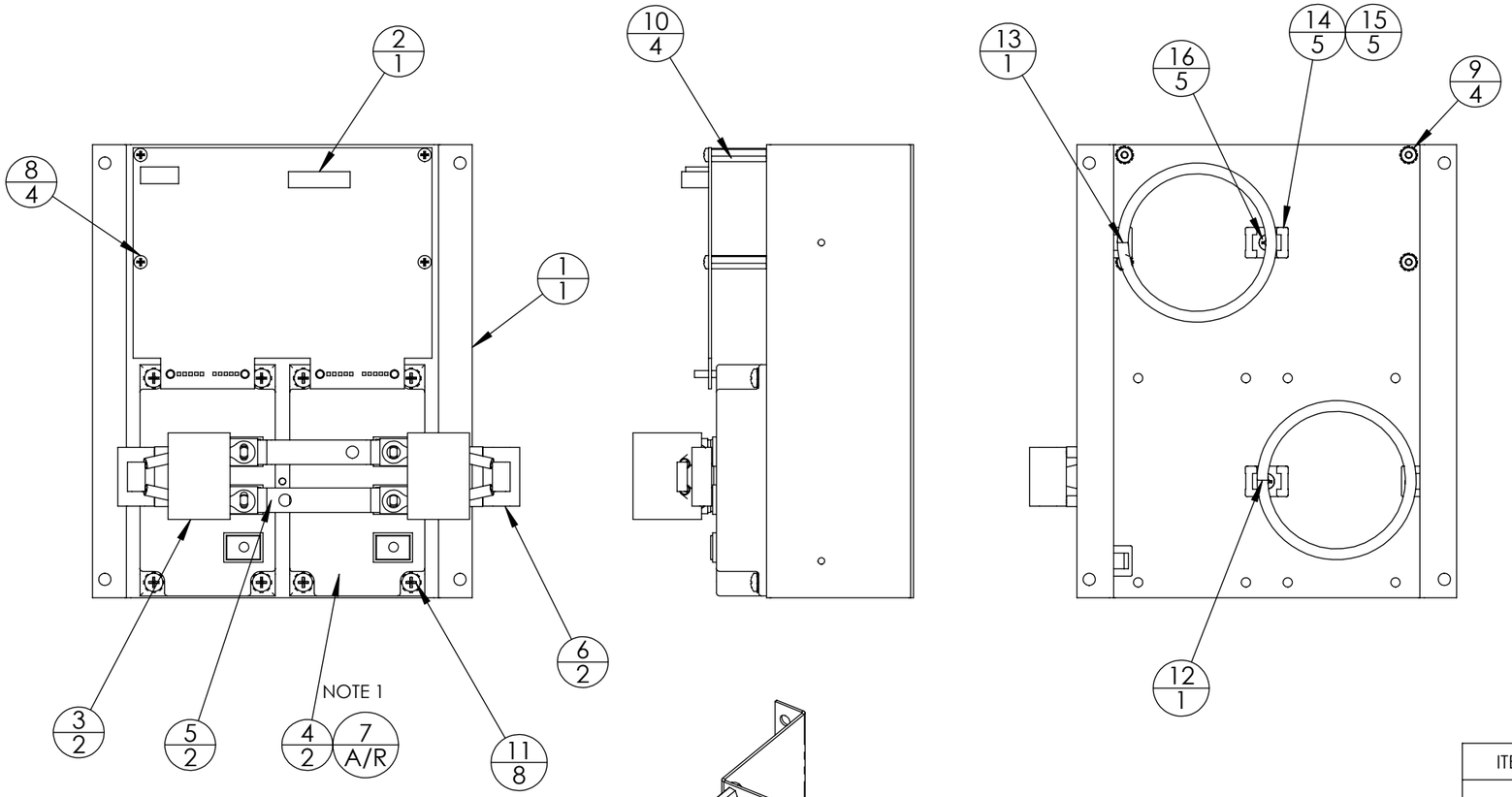

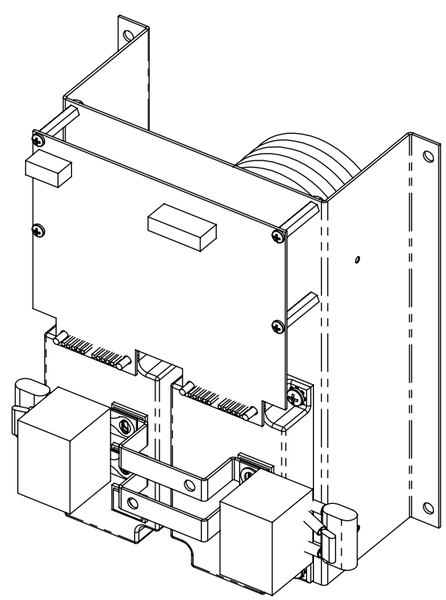

ITEM NO.	PART NUMBER	DESCRIPTION	QTY.
1	203-5189P1	BRKT, IPM	1
2	124-5130G1	PCBA, IPM DRIVER	1
3	655-5001P1	CAPACITOR MODULE, IGBT SNUBBER	2
4	654-5001P1	POWER MODULE, 600V, 400A	2
5	212-5011P1	BUSS BAR, IPM	2
6	122-5109G1	ASM, SNUBBER	2
7	384517	COMPOUND, THERMAL	1
8	760-20-14203870	SCREW, 6-32 x 3/8, NYLON	4
9	784-12-14200011	NUT,HEX KEPS 6-32	4
10	642-0018P22	STANDOFF, MALE FEMALE, 6-32 x 1.12, NYLON	4
11	760-22-19103811	SCREW, PPNHMS SEMS 10-32 x 3/8	8
12	112-5473G1	ASSEMBLY COIL	1
13	112-5473G2	ASSEMBLY, COIL	1
14	642-0009P2	CABLE TIE MOUNT, #8 SCREW	5
15	642-5020P4	CABLE TIE,.14W X 8.0L,40#	5
16	763-20-16202511	SCREW, UPFHMS #8-32 X 1/4"	5

ASSEMBLY, INVERTER, POWER MODULE
P/N #112-5472 REV.A

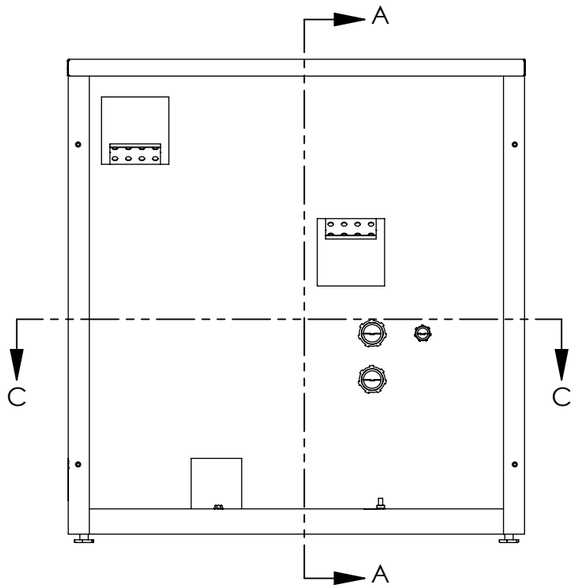

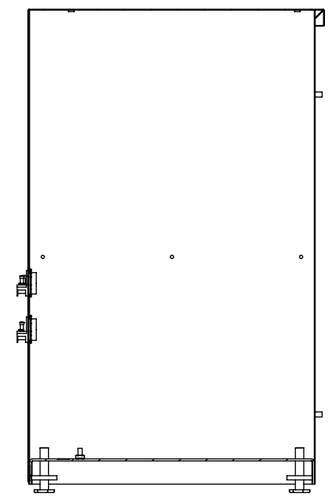

SECTION A-A

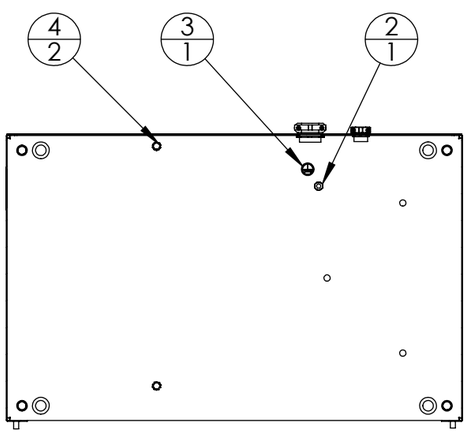

SECTION C-C

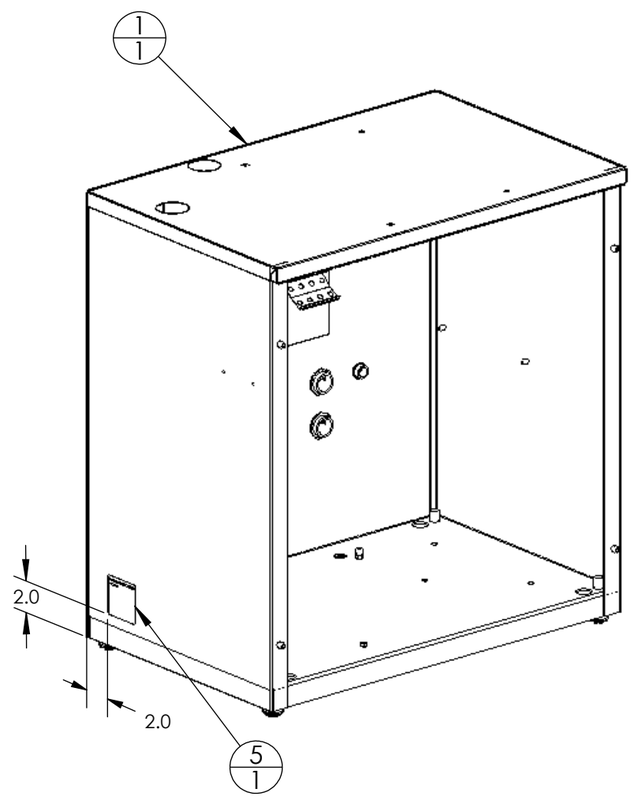

ITEM NO.	PART NUMBER	DESCRIPTION	112-5484G1/QTY.
1	114-5164P1	EQUIPMENT CABINET	1
2	784-12-25200011	NUT,HEX KEPS 1/4-20	1
3	408-5039P1	LABEL, EARTH GROUND	1
4	751-02-25203811	SCREW, HHMS, 1/4-20 x 3/8	2
5	408-5250P1	LABEL, SERIAL, LOWER CABINET, 1PH	1

ASSEMBLY, LOWER CABINET, 1PH
P/N #112-5484 Rev. A

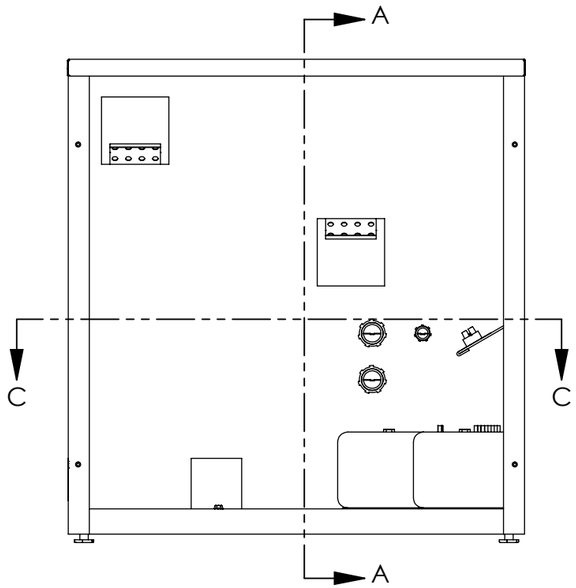

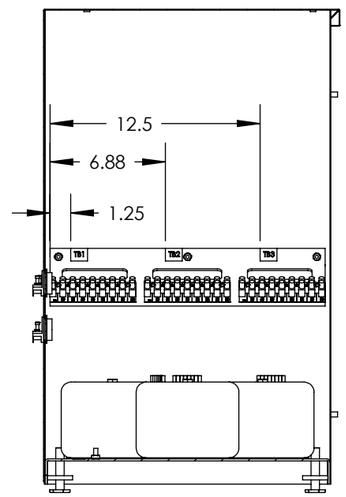

SECTION A-A

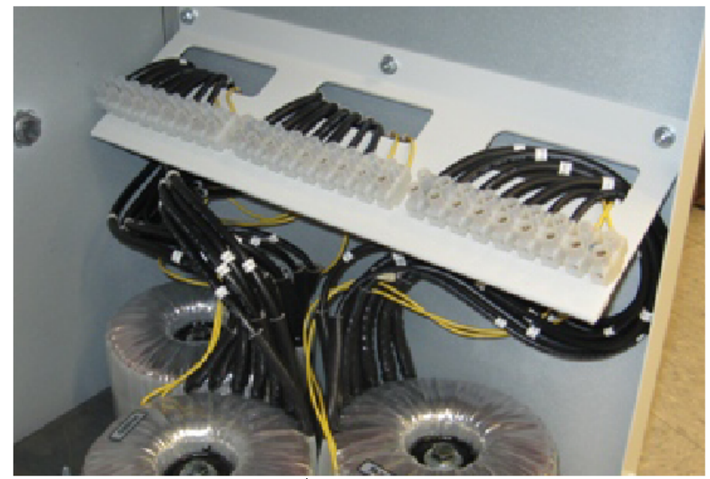

G1 **ASM, LOWER CABINET, 1PH**

G2 **ASM, LOWER CABINET, 3PH**

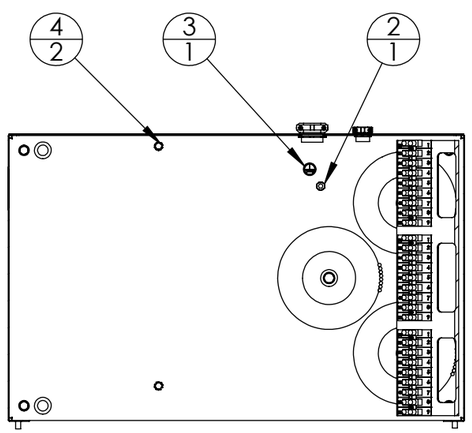

SECTION C-C

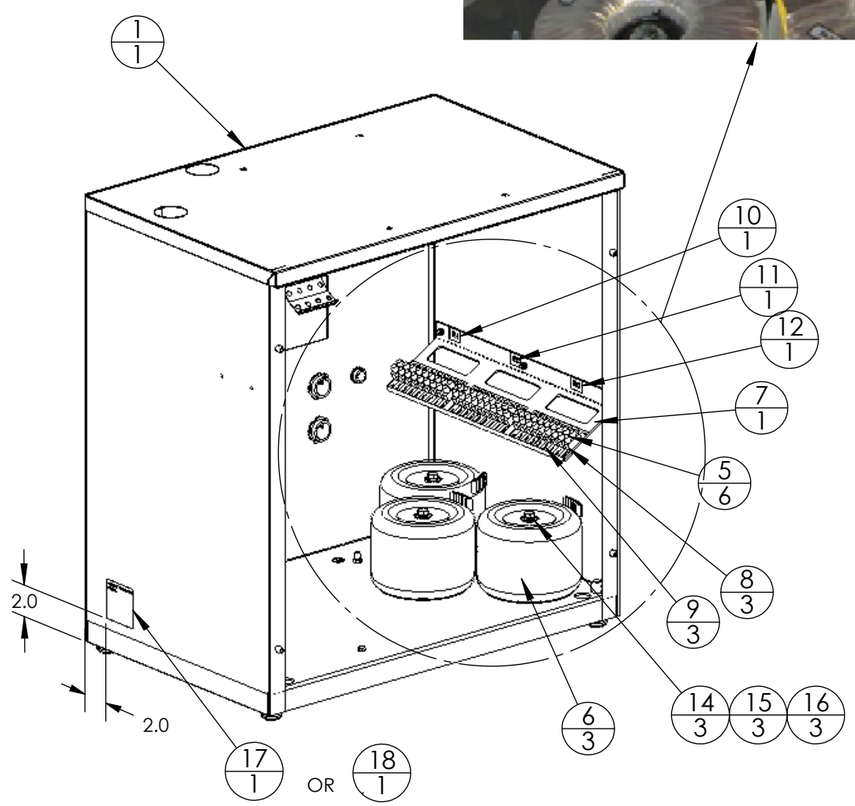

ITEM NO.	PART NUMBER	DESCRIPTION	112-5484G1/QTY.	112-5484G2/QTY.
1	114-5164P1	EQUIPMENT CABINET	1	1
2	784-12-25200011	NUT,HEX KEPS 1/4-20	1	1
3	408-5039P1	LABEL, EARTH GROUND	1	1
4	751-02-25203811	SCREW, HHMS, 1/4-20 x 3/8	2	2
5	760-22-14206311	SCREW, PPNHMS SEMS 6-32x5/8	-	6
6	636-5047P1	TRANSFORMER, 3-PHASE LINE-MATCH	-	3
7	201-5162P1	BRACKET, TERMINAL STRIP	-	1
8	641-5039P1	TERMINAL BLOCK, 9 POS	-	3
9	408-5254P1	LABEL, TERMINAL STRIP, 3PH X-FMR	-	3
10	408-5255P1	LABEL, TB, 3PH X-FMR (TB1)	-	1
11	408-5255P2	LABEL, TB, 3PH X-FMR (TB2)	-	1
12	408-5255P3	LABEL, TB, 3PH X-FMR (TB3)	-	1
13	784-12-19100011	NUT,HEX KEPS 10-32	-	3
14	785-13-38000011	WASHER, FLAT 3/8	-	3
15	786-50-38000011	WASHER,SPLITLK-STD 3/8	-	3
16	751-00-38235011	SCREW,HHMS 3/8-16 X 3.5"	-	3
17	408-5250P2	LABEL, SERIAL, LOWER CABINET, 3PH	-	1
18	408-5250P1	LABEL, SERIAL, LOWER CABINET, 1PH	1	-

ASSEMBLY, LOWER CABINET
P/N #112-5484 Rev. A

Notes

Notes

Notes

Notes